Tampa Construction Specifications

Contract 26-C-00040; Pump Station Resiliency and Reliability Improvements Contract C
CITY OF TAMPA, FLORIDA

Reference Documents
for

Contract 26-C-00040 Pump Station Resiliency and Reliability Improvements Contract C

These documents for the referenced projects come from uncontrolled sources and do not conform to WCAG 2.1 at level AA. Individuals with disabilities seeking assistance with the individual project plans or specifications should e-mail Contractadministration@tampagov.net.

City of Tampa
Contract Administration Department

Tampa Municipal Office Building
306 E Jackson Street #280A4N Fourth Floor
Tampa, Florida 33602

SEPTEMBER 2026

City of Tampa
Jane Castor, Mayor

Mobility Department
Stormwater Engineering Division
306 E Jackson Street, 6th N
Tampa, Florida 33602

Office (813) 274-8386

Submittal Comments

Submittal No.: V4	**Description:** Lake Eckles Genset and ATS
Project: CoT Stormwater - Pump Sta. Resiliency and Reliability Improvements	
Date: 06/26/26	**Reviewer:** J. Sysak, EDA

- [ ] REVIEWED
- [ ] REVISE AND RESUBMIT
- [x] REVIEWED, NOTE EXCEPTIONS
- [ ] REJECTED

Notations or comments made in this submittal do not relieve the contractor from compliance with the requirements of the contract documents. This review is only for the purpose of determining whether the submittal is in general conformance with the design intent and general compliance with the contract documents. The contractor is responsible for providing the required level of quality and detail review, confirming all quantities and dimensions, selecting fabrication processes and techniques of manufacture, coordinating his or her work with that of other trades and providing for the work in a safe and satisfactory manner.

Comments:

1. Refer to attached EDA comment on p. 2.

Electrical Design Associates

SHOP DRAWING REVIEW

Date:	June 24, 2026
Project Name:	City of Tampa Storm Water Pump Station - Eckles
Owner's Project Number:	
Engineer's Project Number:	056336,002
Contractor's Project Number:	
Contractor Submittal Number:	
Submittal Name:	Eckles_251550 Electronic Submittal V4
Submittal Specification Section:	

Submittal Status:

- ☐ Approved
- ☒ Approved as Noted
- ☐ Approved as Noted, Confirm
- ☐ Not Approved, Resubmit

Engineer's review is for general conformance with the design concept of the project and the information given in the contract documents. This review does not include: confirming and correlating all quantities and dimensions; selecting fabrication processes and techniques of construction; coordinating the work with that of other trades and performing all work in a safe and satisfactory manner. These items are the Contractor's responsibility. Corrections or comments made on this submittal during this review do not relieve Contractor from compliance with the requirements of the contract documents.

Comments:

1. On page 136 of the submittal, remove the fourth LED light to match pages 123 and 125.

Ring Power CAT

Power Systems Division

500 World Commerce Parkway
St. Augustine, Florida 32092
www.ringpower.com
(904) 737-7730

Submittal Data

Prepared For:
City of Tampa Stormwater Operations
3804 E 26th Ave
Tampa, FL 33605

STORM WATER LAKES ECKLES

Caterpillar D60GC 60kW Generator Set

Ring Power Project Number:	251550
Project Manager:	Zach Rogers
Salesman:	Chad Vilches

Date:
December 18th, 2025

Your North and Central Florida Caterpillar® Dealer

Power Systems Division

Ring Power Corp
500 World Commerce Parkway
St. Augustine, Florida 32092
904-737-7730

December 18th, 2025

Dear Customer,

The submittal information contained in the following pages contains technical data on your project including product specifications, drawings, and start-up requirements. Our project is currently "**Hold for Approval**". This document requires your immediate review and concurrence before we can proceed with an equipment order. Please return either the corrected copy with the Letter of Submittal Return or the Letter of Submittal Approval to your Project Manager, Zach Rogers, at your earliest convenience.

If you have any general or technical questions, please contact him at:

Office: (904) 494-1241
Cell: (904) 837-3717
Email: Zachary.Rogers@ringpower.com

If you need pricing assistance with future projects, please contact your sales representative, Chad Vilches, at:

Cell: (813) 508-4120
Email: Chad.Vilches@ringpower.com

Thank you,

Peggy Wallace

Peggy Wallace, PMP, MBA
Engineering Manager
Project Management Office
Ring Power Corporation
(904) 494-1290
peggy.wallace@ringpower.com

Ring Power Corp
500 World Commerce Parkway
St. Augustine, Florida 32092
904-737-7730

Letter of Approval
Project # 251550
Project Name: STORM WATER LAKES ECKLES

I have reviewed the information contained in the Generator Set Submittal and agree that the products, specifications, and content meet the technical requirements of this project. I thereby approve this Engineering Submittal as provided.

Customer Signature	Date
Ring Power Project Manager	Date Received

Letter of Submittal Return
Project # 251550
Project Name: STORM WATER LAKES ECKLES

I have reviewed the information contained in the Generator Set Submittal, made the applicable changes and returned the original copy for your review and correction.

Customer Signature	Date
Ring Power Project Manager	Date Received

Power Systems Division

Standby Generator
Caterpillar D60GC Generator Set

STORM WATER LAKES ECKLES

Caterpillar Generator Dealer
Ring Power Systems
10421 Fern Hill Dr.
Riverview, FL 33578
(813) 671-3700

Enclosure & Sub-Base Fuel Tank Manufacturer
Phoenix Products
1544 E 8th St
Jacksonville, FL 32206
(904) 354-1858

Transfer Switch Manufacturer
Eaton Corporation

Ring Power Generator Contacts
Salesperson: Chad Vilches
Project Manager: Zach Rogers
Phone: 904-837-3717
Email: Zachary.Rogers@ringpower.com

Ring Power Job Number: 251550

RETAIL TABLE OF CONTENTS

PROJECT NAME: STORM WATER LAKES ECKLES

RING POWER PROJECT NUMBER: 251550

1. GENERATOR SET

Generator Set Specification Sheet
Generator Data
Performance Data
Systems Data
Radiator/Package Data
Thermal Damage Curve
Emissions Certificate of Conformity
Engine Controller
Voltage Regulator
Permanent Magnet
Generator Set Controller
• Quick Start Guide
• Overview

2. ACCESSORIES

Generator Circuit Breakers
Shunt Trip/Auxiliary Contacts
Battery Charger
Batteries
Jacket Water Heater
Anti-Condensation Heater
GFCI
Ground Fault Relay
Remote Annunciator
I/O Module
Belden Cable (By others – information only)
Enclosure & Accessories
Fuel Storage Tank & Accessories

3. DRAWINGS

Cable Lug Information
Pad Outline
Electrical Interconnect
Gas Piping Drawing (Gas units only)
Generator Set – Mechanical
Generator Set – Electrical
Phoenix or Fidelity Drawings (if applicable)

RETAIL TABLE OF CONTENTS

PROJECT NAME: STORM WATER LAKES ECKLES

RING POWER PROJECT NUMBER: 251550

4. GENERAL INFORMATION

Division of Responsibilities
Request for Start-up Checklist
Foundation Considerations
Installation Summary
Caterpillar Limited Warranty Statement
Caterpillar Limited Battery Warranty Statement
Extended Service Coverage Contract
Equipment Lifting Diagram
A&I Guide (Gas units only)
Generator Testing Requirements (obtain from specifications or EOR)
FDEP Documentation (By Customer – Informational purpose only)

- Owner Responsibility and Directions
- FDEP Contact Information

5. TRANSFER SWITCH

Summary
Features & Accessories
Drawings
Wiring Diagram
Equipment Brochure
Limited Warranty Statement

City of Tampa
Jane Castor, Mayor

Mobility Department
Stormwater Engineering Division
306 E Jackson Street, 6th N
Tampa, Florida 33602

Office (813) 274-8386

Submittal Comments

Submittal No.: 1	**Description:** SITE: LAKE ECKLES
Project: Stormwater Engineering Pump Sta. R&R Improvements - LAKE ECKLES	
Date: 3/10/2026	**Reviewer:** JS, JD (CoT), EDA, McKim Creed

- [ ] REVIEWED
- [x] REVISE AND RESUBMIT
- [ ] REVIEWED, NOTE EXCEPTIONS
- [ ] REJECTED

Notations or comments made in this submittal do not relieve the contractor from compliance with the requirements of the contract documents. This review is only for the purpose of determining whether the submittal is in general conformance with the design intent and general compliance with the contract documents. The contractor is responsible for providing the required level of quality and detail review, confirming all quantities and dimensions, selecting fabrication processes and techniques of manufacture, coordinating his or her work with that of other trades and providing for the work in a safe and satisfactory manner.

Comments:

1. ~~Move genset control panel and fuel fill location to opposite (EAST) side, as noted on p. 115.~~ Change Reverted per 3/18 Ring Power meeting.

2. See attached comments from: EDA on p. 2.

3. Please call if any questions or discussion needed.

Electrical Design Associates

SHOP DRAWING REVIEW

Date:	March 6, 2026
Project Name:	City of Tampa Storm Water Pump Station - Eckles
Owner's Project Number:	
Engineer's Project Number:	056336,002
Contractor's Project Number:	
Contractor Submittal Number:	
Submittal Name:	
Submittal Specification Section:	

Submittal Status:

- ☐ Approved
- ☐ Approved as Noted
- ☒ Approved as Noted, Confirm
- ☐ Not Approved, Resubmit

Engineer's review is for general conformance with the design concept of the project and the information given in the contract documents. This review does not include: confirming and correlating all quantities and dimensions; selecting fabrication processes and techniques of construction; coordinating the work with that of other trades and performing all work in a safe and satisfactory manner. These items are the Contractor's responsibility. Corrections or comments made on this submittal during this review do not relieve Contractor from compliance with the requirements of the contract documents.

Comments:

1. On page 50 of the submittal, indicate which battery shall be used in this project.
2. Page 61 of the submittal, confirm the intent of the Belden #9841 cable.
3. On page 84 of the submittal, confirm that the louvers are sound attenuated per 16216, 2.05, J.
4. On page 88 of the submittal, the enclosure is rated NEMA 3R, but from 16216, 2.05, P, the enclosure shall be rated NEMA 4X.
5. Page 96 appears to be a duplicate of the continuous level found on page 75.
6. On page 113 of the submittal, there shall be a light switch located at each of the doors per 16216, 2.05, P.
7. On page 120 of the submittal, confirm that there will be 4 LED lights per 16216, 2.05, P.
8. On page 185 of the submittal, the adjustable time delay is from 0 – 60 seconds, but according to 16216, 2.11, D, the adjustable time delay shall be 0 – 10 seconds.
9. Confirm that the selected transfer switch is IBC/CBC seismic qualified per 16216, 2.11, D.
10. Revise the submittal to include a pre-wired mini power zone per 16216, 2.05, P.
11. Per 16216, 2.05, C, the enclosure manufacturer shall submit a signed certificate by a Professional Engineer registered in the State of Florida that the enclosure is rated to withstand the required wind loads.

City of Tampa
Jane Castor, Mayor

Mobility Department
Stormwater Engineering Division
306 E Jackson Street, 6th N
Tampa, Florida 33602

Office (813) 274-8386

Submittal Comments

Submittal No.: V3	**Description:** Reviewed "V3" submittal drawings for 60kW CAT genset, fuel tank, and enclosure package
Project: Eckles (Lake)	
Date: 6/18/2026	**Reviewer:** J. Sysak, J. DeBosier with consultant support

☐ REVIEWED	☒ REVISE AND RESUBMIT
☐ REVIEWED, NOTE EXCEPTIONS	☐ REJECTED

Notations or comments made in this submittal do not relieve the contractor from compliance with the requirements of the contract documents. This review is only for the purpose of determining whether the submittal is in general conformance with the design intent and general compliance with the contract documents. The contractor is responsible for providing the required level of quality and detail review, confirming all quantities and dimensions, selecting fabrication processes and techniques of manufacture, coordinating his or her work with that of other trades and providing for the work in a safe and satisfactory manner.

Comments:

1. Mount MPU onto outside of enclosure within NEC height limitations accounting for a 4" high pedestal below the tank.
2. Provide internal wiring necessary for all 120V components.

Electrical Design Associates

SHOP DRAWING REVIEW

Date:	June 16, 2026
Project Name:	City of Tampa Storm Water Pump Station - Eckles
Owner's Project Number:	
Engineer's Project Number:	056336,002
Contractor's Project Number:	
Contractor Submittal Number:	
Submittal Name:	Eckles_251550 Electronic Submittal V3
Submittal Specification Section:	

Submittal Status:

- ☒ Approved
- ☐ Approved as Noted
- ☐ Approved as Noted, Confirm
- ☐ Not Approved, Resubmit

Engineer's review is for general conformance with the design concept of the project and the information given in the contract documents. This review does not include: confirming and correlating all quantities and dimensions; selecting fabrication processes and techniques of construction; coordinating the work with that of other trades and performing all work in a safe and satisfactory manner. These items are the Contractor's responsibility. Corrections or comments made on this submittal during this review do not relieve Contractor from compliance with the requirements of the contract documents.

Comments:

251550 - Storm Water Lakes Eckles

Submittal Comments: Answers

1. Battery Indication (Highlighted)
2. Belden Cable (Recommended Communication Cable)
3. SA Louver (Louvers are installed within SA hoods eliminates need for SA louver)
4. Nema 3r (Will be Changed to Nema 4x SS)
5. Lights Switch (Timers used Out of Spec per Jay/Jeff)
6. Light LED (4x)
7. ATS Time Delay (User Defined See link for Reference on assigning set Points)
   Automatic Transfer Switch Controller, ATC-900 Operation and Maintenance Manual
8. ATS Seismic (See attached Document)
9. MPZ (Included PG 91)
10. Wind Load Certificate (PE DWG & Calculation to be provided upon approval and release) All PHX Enclosure have a base wind load rating of 150 MPH

Seismic qualified

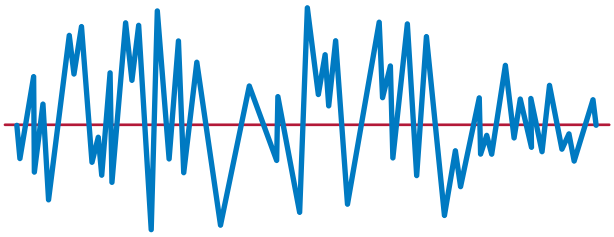

Eaton's equipment identified below was tested for both seismic withstand capability and in accordance with the combined requirements specified in the International Building Code, the California Building Code, and the Uniform Building Code.

As required by the codes, the equipment demonstrated its ability to function after the seismic tests. The seismic capability of the equipment exceeds the worst-case required levels, as illustrated in the figure below.

Low Voltage Transfer Switches—Wall-Mounted (MCCB and Contactor Type)

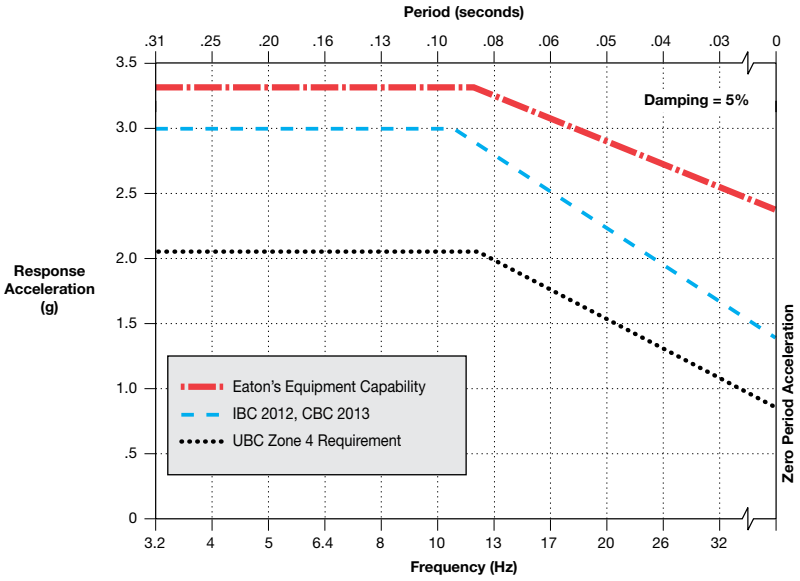

The frequency sweep tests revealed that the lowest equipment natural frequency is:

N/A (Wall-Mounted)

Drawing Number SA00900022E

William V. Joerger, S.E.
ISAT

3RD PARTY TEST ENGINEER IN CHARGE

For interpretation of testing data, refer to Eaton Publication SA12501SE

TESTED BY
Wyle Laboratories
January, 2013–70461R12

Eaton
1000 Eaton Boulevard
Cleveland, OH 44122
United States
Eaton.com

© 2014 Eaton
All Rights Reserved
Printed in USA
June 2014

Eaton is a registered trademark.

All other trademarks are property of their respective owners.

Powering Business Worldwide

1

GENERATOR SET

Cat® D60 GC
Diesel Generator Sets

Standby : 60 Hz

Image shown might not reflect actual configuration

Engine Model	Cat® C4.4 In-line 4, 4-cycle Diesel
Bore x Stroke	105 mm x 127 mm (4.1 in x 5.0 in)
Displacement	4.4 L (269 in³)
Compression Ratio	16.7:1
Aspiration	Turbocharged
Fuel Injection System	Common Rail

Model	Standby	Emission Strategy
D60 GC	60 ekW	EPA TIER III

PACKAGE PERFORMANCE

Performance	Standby	
	3-Phase	1-Phase
Frequency	60 Hz	60 Hz
Genset Power Rating	75 kVA	60 kVA
Genset power rating with fan, 3p@ 0.8 & 1p@1.0 power factor	60 ekW	60 ekW
Performance Number	P4506A	
Fuel Consumption		
100% load with fan, L/hr (gal/hr)	16.3 (4.3)	15.9 (4.2)
75% load with fan, L/hr (gal/hr)	12.4 (3.3)	12.0 (3.2)
50% load with fan, L/hr (gal/hr)	9.0 (2.4)	8.7 (2.3)
Cooling System[1]		
Radiator air flow restriction (system), kPa (in. water)	0.12 (0.48)	
Engine coolant capacity, L (gal)	7.0 (1.8)	
Radiator coolant capacity, L (gal)	9.5 (2.5)	
Total coolant capacity, L (gal)	16.5 (4.3)	
Inlet Air		
Combustion air inlet flow rate, m³/min (CFM)	6.17 (218)	6.2 (218)
Max. Allowable Combustion Air Inlet Temp, °C (°F)	45 (113)	
Exhaust System		
Exhaust stack gas temperature, °C (°F)	644 (1191)	644 (1191)
Exhaust gas flow rate, m³/min (CFM)	14.5 (512)	14.5 (512)
Exhaust system backpressure (maximum allowable), kPa (in. water)	15.0 (60.2)	15.0 (60.2)
Heat Rejection		
Heat rejection to exhaust (total), kW (BTU/min)	66.9 (3805)	66.9 (3805)
Heat rejection to atmosphere from engine, kW (BTU/min)	11.9 (677)	11.9 (677)
Emissions (Nominal)[2]		
NOx + HC, g/kW-hr	4.33	4.33
CO, g/kW-hr	1.15	1.15
PM, g/kW-hr	0.18	0.18

D60 GC Diesel Generator Sets
Electric Power

Alternator[3]				
Voltages	480V	208V	600V	240V
Motor starting capability @ 30% Voltage Dip, skVA	133	111	276	182
Current Amps	90	208	72	250
Frame Size	M1775L4	M2233L4	M2233L4	M2235L4
Excitation	SE	SE	AREP	SE
Temperature Rise, °C	130	105	105	105

WEIGHTS & DIMENSIONS

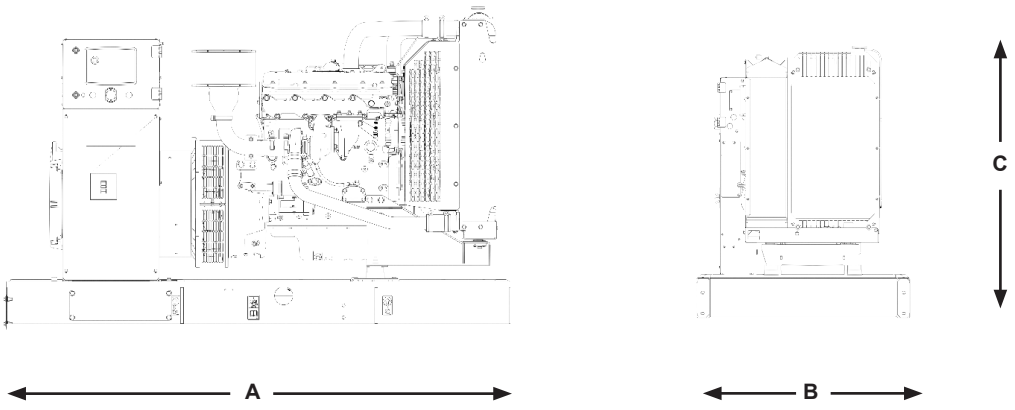

Dim "A" mm (in)	Dim "B" mm (in)	Dim "C" mm (in)	Dry Weight kg (lb)
1962 (77.2)	**1100 (43.3)**	**1220 (48.0)**	**932 (2054)**

Note: General configuration not to be used for installation. See general dimension drawings for detail.

APPLICABLE CODES AND STANDARDS:

CSA C22.2 No 100-04, UL142, UL489, UL869, cUL/UL2200, NFPA 37,NFPA 70,NFPA 99,NFPA 110, IBC, IEC60034-1, ISO 3046, ISO 8528,NEMA MG 1-33.
Note: Codes may not be available in all model configurations. Please consult your local Cat Dealer representative for availability.

STANDBY: Output available with varying load for the duration of the interruption of the normal source power. Average power output is 70% of the standby power rating. Typical operation is 200 hours per year, with maximum expected usage of 500 hours per year.

RATINGS: Ratings are based on SAE J1349 standard conditions. These ratings also apply at ISO3046 standard conditions.

DEFINITIONS AND CONDITIONS

[1] For ambient and altitude capabilities consult your Cat dealer. Air flow restriction (system) is added to existing restriction from factory.

[2] Emissions data measurement procedures are consistent with those described in EPA CFR 40 Part 89, Subpart D & E and ISO8178-1 for measuring HC, CO, PM, NOx. Data shown is based on steady state operating conditions of 77° F, 28.42 in HG and number 2 diesel fuel with 35° API and LHV of 18,390 BTU/lb. The nominal emissions data shown is subject to instrumentation, measurement, facility and engine to engine variations. Emissions data is based on 100% load and thus cannot be used to compare to EPA regulations which use values based on a weighted cycle.

[3] UL 2200 Listed packages may have oversized generators with a different temperature rise and motor starting characteristics. Generator temperature rise is based on a 40° C ambient per NEMA MG1-32.

LET'S DO THE WORK.™

www.Cat.com/electricpower
© 2022 Caterpillar. All Rights Reserved.
Materials and specifications are subject to change without notice. The International System of Units (SI) is used in this publication.
CAT, CATERPILLAR, LET'S DO THE WORK, their respective logos, "Caterpillar Corporate Yellow", the "Power Edge" and Cat "Modern Hex" trade dress as well as corporate and product identity used herein, are trademarks of Caterpillar and may not be used without permission.

Generator Data

January 15,2026

For Help Desk Phone Numbers Click here

Spec Info Mechanical Data Cooling Data Motor Starting Curve Open Circuit Curve
Zero Power Factor Curve Reactive Capability Chart General Information

Selected Model

Engine: C4.4 **Generator Frame:** M1775L4 **Genset Rating (kW):** 60.0 **Line Voltage:** 480
Fuel: Diesel **Generator Arrangement:** 5969908 **Genset Rating (kVA):** 75.0 **Phase Voltage:** 277
Frequency: 60 **Excitation Type:** Permanent Magnet **Pwr. Factor:** 0.8 **Rated Current:** 90.2
Duty: STANDBY **Connection:** SERIES STAR **Application:** EPG **Status:** Current
Version: 42423 /44642 /44146 /11716

Spec Information

Generator Specification

Frame: M1775L4 **Type:** LC **No. of Bearings:** 1
Winding Type: RANDOM WOUND **Flywheel:** 11.5
Connection: SERIESSTAR **Housing:** 3
Phases: 3 **No. of Leads:** 12
Poles: 4 **Wires per Lead:** 1
Sync Speed: 1800 **Generator Pitch:** 0.6667

Generator Efficiency

Per Unit Load	kW	Efficiency %
0.25	15	89
0.5	30	91.5
0.75	45	91.4
1	60	90.5

Reactances	Per Unit	Ohms
SUBTRANSIENT - DIRECT AXIS X''_d	0.0781	0.2400
SUBTRANSIENT - QUADRATURE AXIS X''_q	0.1094	0.3360
TRANSIENT - SATURATED X'_d	0.1523	0.4680
SYNCHRONOUS - DIRECT AXIS X_d	3.1641	9.7200
SYNCHRONOUS - QUADRATURE AXIS X_q	1.6016	4.9200
NEGATIVE SEQUENCE X_2	0.0938	0.2880
ZERO SEQUENCE X_0	0.0063	0.0192

Time Constants	Seconds
OPEN CIRCUIT TRANSIENT - DIRECT AXIS T'_{d0}	1.0320
SHORT CIRCUIT TRANSIENT - DIRECT AXIS T'_d	0.0500
OPEN CIRCUIT SUBSTRANSIENT - DIRECT AXIS T''_{d0}	0.0100
SHORT CIRCUIT SUBSTRANSIENT - DIRECT AXIS T''_d	0.0050
OPEN CIRCUIT SUBSTRANSIENT - QUADRATURE AXIS T''_{q0}	0.0735
SHORT CIRCUIT SUBSTRANSIENT - QUADRATURE AXIS T''_q	0.0050
EXCITER TIME CONSTANT T_e	0.0220
ARMATURE SHORT CIRCUIT T_a	0.0080

Short Circuit Ratio: 0.36	Stator Resistance = 0.182Ohms	Field Resistance = 0.95 Ohms

Voltage Regulation	
Voltage level adjustment: +/-	5.0%
Voltage regulation, steady state: +/-	1.0%
Voltage regulation with 3% speed change: +/-	1.0%
Waveform deviation line - line, no load: less than	2.0%
Telephone influence factor: less than	50

Generator Excitation			
	No Load	**Full Load, (rated) pf**	
		Series	**Parallel**
Excitation voltage:	8.8 Volts	42.8 Volts	Volts
Excitation current	0.5 Amps	2.0 Amps	Amps

Top...

Selected Model

Engine: C4.4	**Generator Frame:** M1775L4	**Genset Rating (kW):** 60.0	**Line Voltage:** 480
Fuel: Diesel	**Generator Arrangement:** 5969908	**Genset Rating (kVA):** 75.0	**Phase Voltage:** 277
Frequency: 60	**Excitation Type:** Permanent Magnet	**Pwr. Factor:** 0.8	**Rated Current:** 90.2
Duty: STANDBY	**Connection:** SERIES STAR	**Application:** EPG	**Status:** Current
			Version: 42423 /44642 /44146 /11716

Generator Mechanical Information

Center of Gravity

Dimension X	-310 mm	-12.2 IN.
Dimension Y	0 mm	0.0 IN.
Dimension Z	0 mm	0.0 IN.

- "X" is measured from driven end of generator and parallel to rotor. Towards engine fan is positive. See General Information for details
- "Y" is measured vertically from rotor center line. Up is positive.
- "Z" is measured to left and right of rotor center line. To the right is positive.

Generator WT = 187 kg * Rotor WT = 65 kg * Stator WT = 122 kg
412 LB 143 LB 269 LB

Rotor Balance = 0 mm deflection PTP
Overspeed Capacity = 125% of synchronous speed

Generator Torsional Data

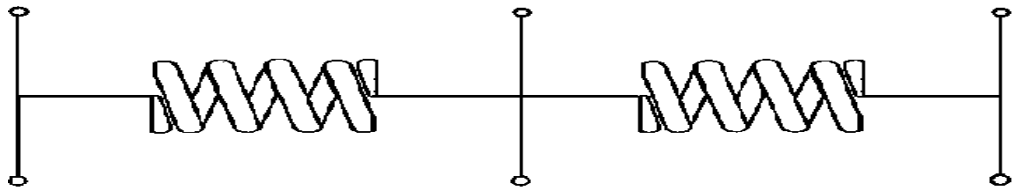

J1 = Coupling and Fan **J2 = Rotor** **J3 = Exciter End**

TOTAL J = J1 + J2 + J3

K1 = Shaft Stiffness between J1 + J2 (Diameter 1) **K2 = Shaft Stiffness between J2 + J3 (Diameter 2)**

J1	K1	Min Shaft Dia 1	J2	K2	Min Shaft Dia 2	J3
0.4 LB IN. s^2	3.7 MLB IN./rad	2.4 IN.	3.3 LB IN. s^2	5.2 MLB IN./rad	2.4 IN.	0.2 LB IN. s^2
0.046 N m s^2	0.41824 MN m/rad	59.8 mm	0.373 N m s^2	0.585 MN m/rad	60 mm	0.023 N m s^2

Total J

3.9 LB IN. s^2

0.442 N m s^2

Top...

Selected Model

Engine: C4.4	**Generator Frame:** M1775L4	**Genset Rating (kW):** 60.0	**Line Voltage:** 480
Fuel: Diesel	**Generator Arrangement:** 5969908	**Genset Rating (kVA):** 75.0	**Phase Voltage:** 277
Frequency: 60	**Excitation Type:** Permanent Magnet	**Pwr. Factor:** 0.8	**Rated Current:** 90.2
Duty: STANDBY	**Connection:** SERIES STAR	**Application:** EPG	**Status:** Current
			Version: 42423 /44642 /44146 /11716

Generator Cooling Requirements -
Temperature - Insulation Data

Cooling Requirements:		**Temperature Data: (Ambient 40 ^{0}C)**	
Heat Dissipated: 6.3 kW		**Stator Rise:**	130 ^{0}C
Air Flow:	7.8 m^3/min	**Rotor Rise:**	130 ^{0}C

Insulation Class: H

Insulation Reg. as shipped: 100MΩ minimum at 40 ^{0}C

Thermal Limits of Generator

Frequency:	60 Hz
Line to Line Voltage:	480 Volts
B BR 80/40	60 kVA
F BR -105/40	68.3 kVA
H BR - 125/40	75 kVA
F PR - 130/40	75 kVA
H PR - 150/40	79.5 kVA
H PR27 - 163/27	82.5 kVA

Top...

Selected Model

Engine: C4.4	**Generator Frame:** M1775L4	**Genset Rating (kW):** 60.0	**Line Voltage:** 480
Fuel: Diesel	**Generator Arrangement:** 5969908	**Genset Rating (kVA):** 75.0	**Phase Voltage:** 277
Frequency: 60	**Excitation Type:** Permanent Magnet	**Pwr. Factor:** 0.8	**Rated Current:** 90.2
Duty: STANDBY	**Connection:** SERIES STAR	**Application:** EPG	**Status:** Current
			Version: 42423 /44642 /44146 /11716

Starting Capability & Current Decrement
Motor Starting Capability (0.6 pf)

SKVA	Percent Volt Dip
9	2.5
18	5.0
28	7.5
39	10.0
50	12.5
61	15.0
74	17.5
87	20.0
101	22.5
116	25.0
131	27.5
149	30.0
167	32.5
187	35.0
208	37.5
231	40.0

Current Decrement Data

E Time Cycle	AMP
0.0	1,134
1.0	454
2.0	321
3.0	238
4.0	259
5.0	289
7.5	327
10.0	312
12.5	286
15.0	274
20.0	268
25.0	269
30.0	270
35.0	270
40.0	271
45.0	271

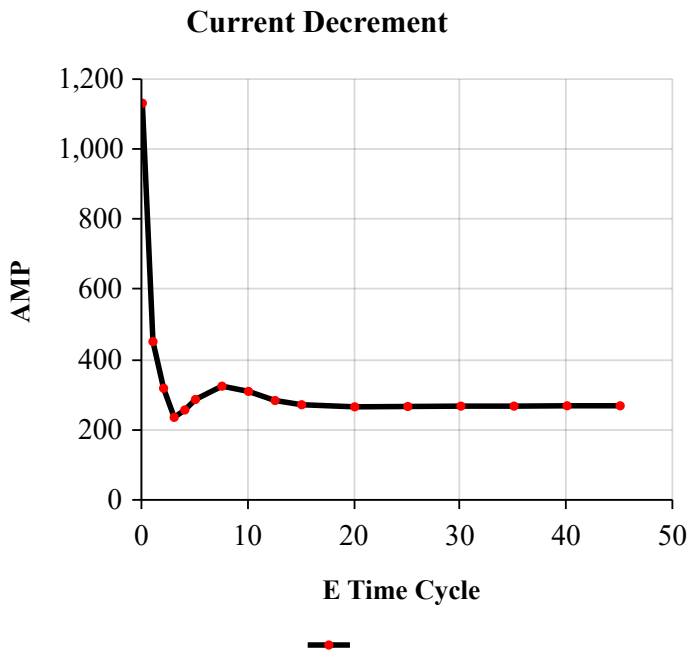

Instantaneous 3 Phase Fault Current: 1134 Amps **Instantaneous Line - Line Fault Current:** 893 Amps
Instantaneous Line - Neutral Fault Current: 1492 Amps

Top...

Selected Model

Engine: C4.4	**Generator Frame:** M1775L4	**Genset Rating (kW):** 60.0	**Line Voltage:** 480
Fuel: Diesel	**Generator Arrangement:** 5969908	**Genset Rating (kVA):** 75.0	**Phase Voltage:** 277
Frequency: 60	**Excitation Type:** Permanent Magnet	**Pwr. Factor:** 0.8	**Rated Current:** 90.2
Duty: STANDBY	**Connection:** SERIES STAR	**Application:** EPG	**Status:** Current

Version: 42423 /44642 /44146 /11716

Generator Output Characteristic Curves
Open Circuit Curve

Field Current	Line - Line Volt
0.0	0
5.2	288
6.1	336
7.0	384
7.9	432
8.9	480
10.1	528
11.3	576
12.9	624
15.0	672

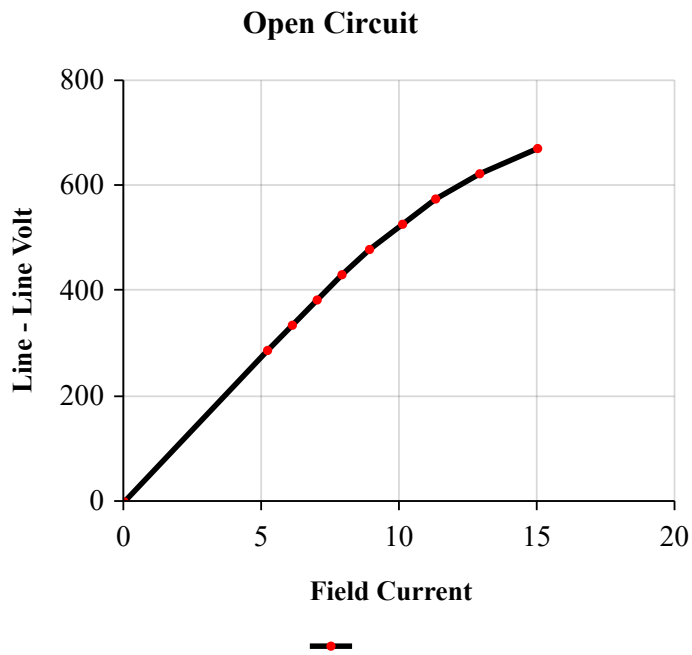

Short Circuit Curve

Field Current	Armature Current
0.0	0
16.3	54
19.0	63
21.7	72
24.5	81
27.2	90
29.9	99
32.6	108
35.3	117
38.0	126

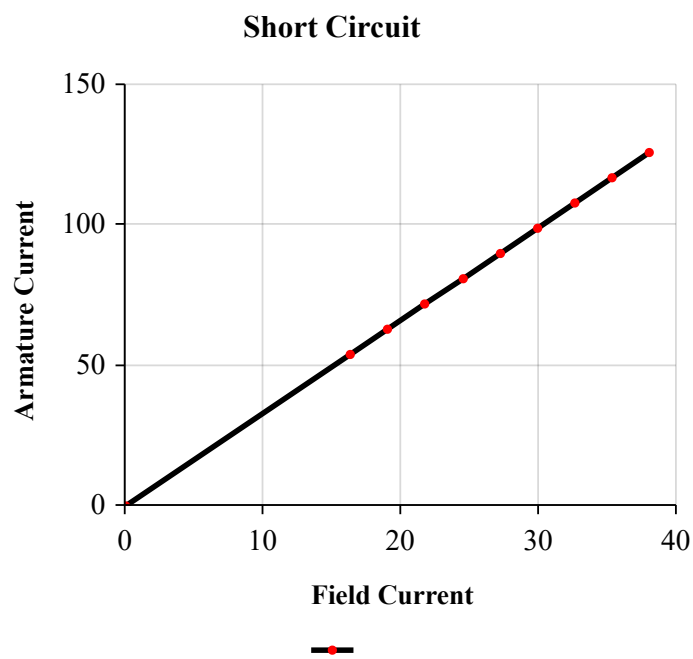

Top...

Selected Model

Engine: C4.4 **Generator Frame:** M1775L4 **Genset Rating (kW):** 60.0 **Line Voltage:** 480
Fuel: Diesel **Generator Arrangement:** 5969908 **Genset Rating (kVA):** 75.0 **Phase Voltage:** 277
Frequency: 60 **Excitation Type:** Permanent Magnet **Pwr. Factor:** 0.8 **Rated Current:** 90.2
Duty: STANDBY **Connection:** SERIES STAR **Application:** EPG **Status:** Current
Version: 42423 /44642 /44146 /11716

Zero Power Factor Curve

Field Current	Line - Line Volt
27.2	0
32.7	240
33.6	288
34.5	336
35.5	384
36.5	432
37.7	480
39.1	528
40.9	576
43.3	624

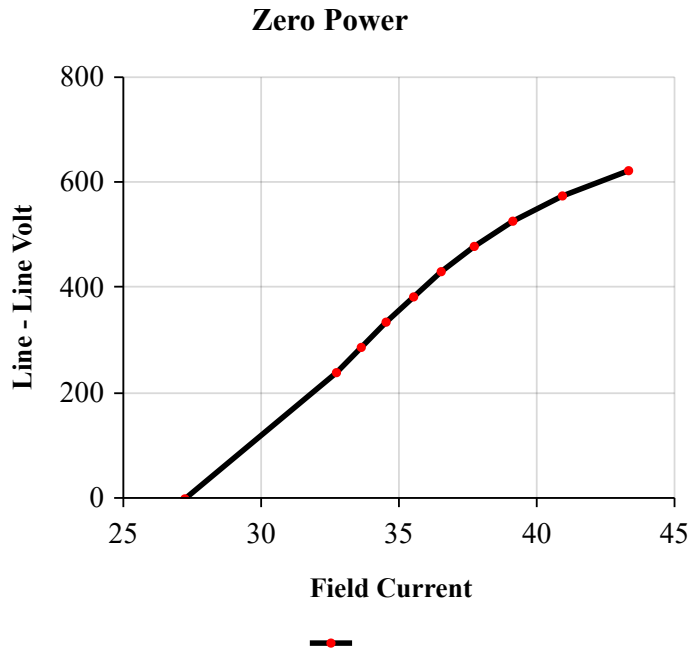

Air Gap Curve

Field Current	Line - Line Volt
0.0	0
5.2	288
6.0	336
6.9	384
7.7	432
8.6	480
9.4	528
10.3	576
11.2	624
12.0	672

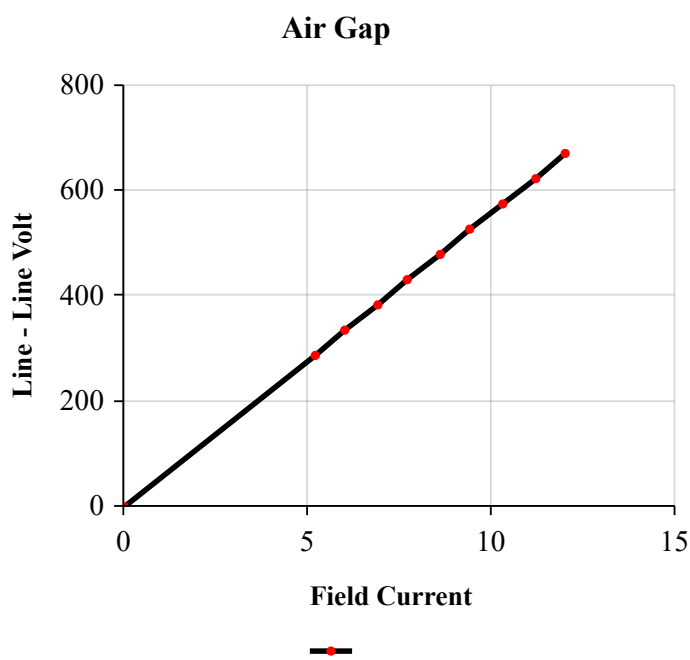

Top...

Selected Model

Engine: C4.4 **Generator Frame:** M1775L4 **Genset Rating (kW):** 60.0 **Line Voltage:** 480
Fuel: Diesel **Generator Arrangement:** 5969908 **Genset Rating (kVA):** 75.0 **Phase Voltage:** 277
Frequency: 60 **Excitation Type:** Permanent Magnet **Pwr. Factor:** 0.8 **Rated Current:** 90.2
Duty: STANDBY **Connection:** SERIES STAR **Application:** EPG **Status:** Current
Version: 42423 /44642 /44146 /11716

Reactive Capability Curve

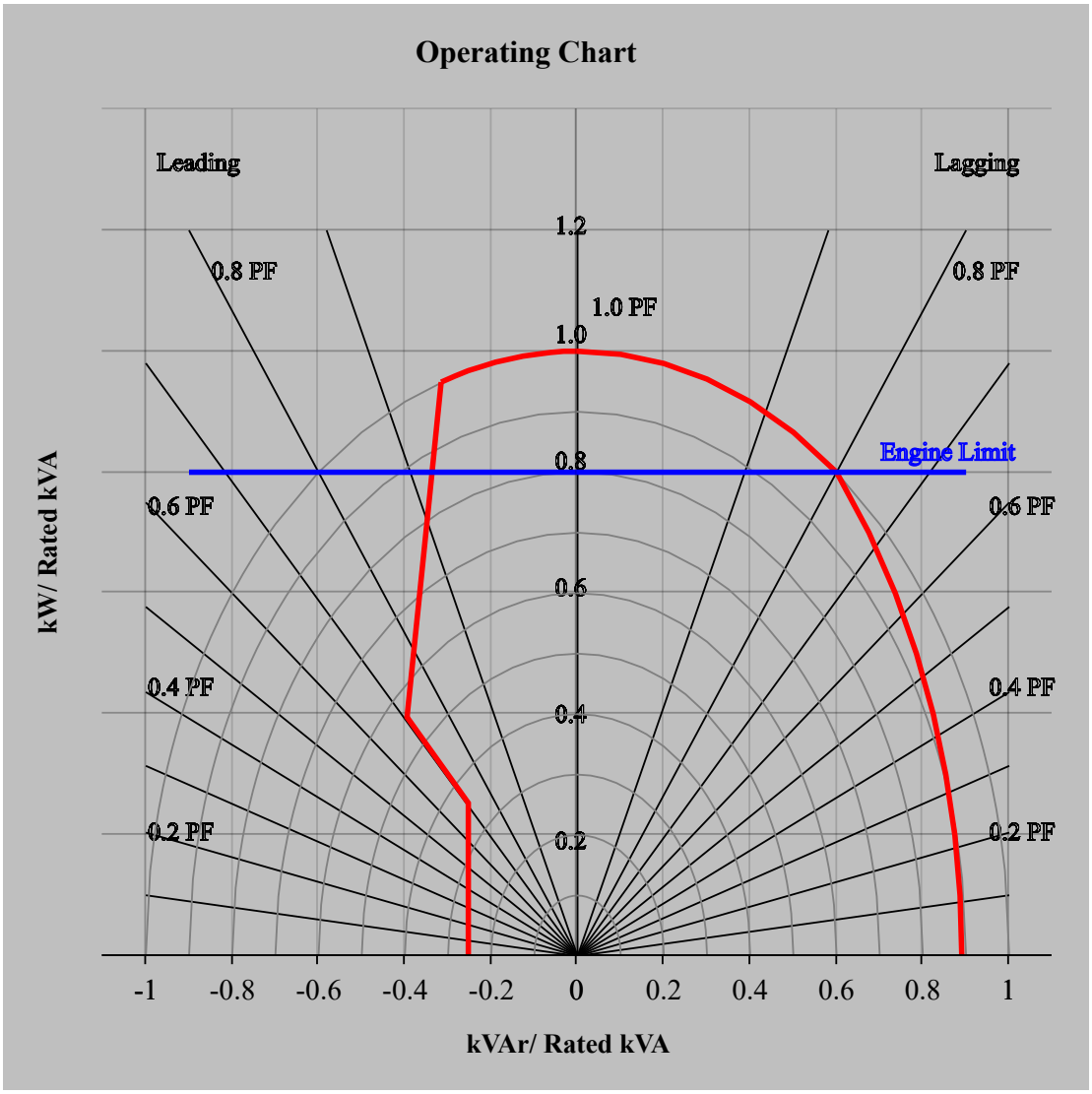

Top...

Selected Model

Engine: C4.4	**Generator Frame:** M1775L4	**Genset Rating (kW):** 60.0	**Line Voltage:** 480
Fuel: Diesel	**Generator Arrangement:** 5969908	**Genset Rating (kVA):** 75.0	**Phase Voltage:** 277
Frequency: 60	**Excitation Type:** Permanent Magnet	**Pwr. Factor:** 0.8	**Rated Current:** 90.2
Duty: STANDBY	**Connection:** SERIES STAR	**Application:** EPG	**Status:** Current
			Version: 42423 /44642 /44146 /11716

General Information

```
GENERATOR INFORMATION (DM7900)

-------------------------------------------------------------

1. Motor Starting
Motor starting curves are obtained in accordance with IEC60034, and
are displayed at 0.6 power factor.

2. Voltage Dip
Prediction of the generator synchronous voltage dip can be made by
consulting the plot for the voltage dip value that corresponds to the
desired motor starting kVA value.
```

3. Definitions

A) Generator Keys

Frame: abbreviation of generator frame size
Freq: frequency in hertz.
PP/SB: prime/standby duty respectively
Volts: line - line terminal voltage
kW: rating in electrical kilo watts
Model: engine sales model

B) Generator Temperature Rise

The indicated temperature rises are the IEC/NEMA limits for standby or prime power applications. The quoted rise figures are maximum limits only and are not necessarily indicative of the actual temperature rise of a given machine winding.

C) Centre of Gravity

The specified centre of gravity is for the generator only. For single bearing, and two bearing close coupled generators, the center of gravity is measured from the generator/engine flywheel-housing interface and from the centreline of the rotor Shaft.

For two bearing, standalone generators, the center of gravity is measured from the end of the rotor shaft and from the centerline of the rotor shaft.

D) Generator Current Decrement Curves

The generator current decrement curve indicates the generator armature current arising from a symmetrical three-phase fault at the generator terminals. Generators equipped with AREP or PMG excitation systems will sustain 300% of rated armature current for 10 seconds.

E) Generator Efficiency Curves

The efficiency curve is displayed for the generator only under the given conditions of rating, voltage, frequency and power factor. This is not the overall generating set efficiency curve.

Caterpillar Confidential: **Green**
Content Owner: Commercial Processes Division
Web Master(s): PSG Web Based Systems Support
Current Date: 1/15/2026, 3:06:17 PM
© Caterpillar Inc. 2026 All Rights Reserved.
Privacy.
Cookie Settings

CATERPILLAR®

Gen Set Package Performance Data [NAC305P] January 09,2026

For Help Desk Phone Numbers Click here

Performance Number: P4506A **Change Level:** 00

Sales Model: C4.4 DIT **Combustion:** DI **Aspr:** T

Engine Power:
60 W/F EKW
96 HP

Speed: 1,800 RPM **After Cooler:**

Manifold Type: **Governor Type:** **After Cooler Temp(F):** 32

Turbo Quantity: **Engine App:** GP **Turbo Arrangement:**

Hertz: 60 **Application Type:** PACKAGE-DIE **Engine Rating:** PGS **Strategy:**

Rating Type: STANDBY **Certification:**

General Performance Data 1

GEN W/F EKW	PERCENT LOAD	ENGINE POWER BHP	ENGINE BMEP PSI	FUEL BSFC LB/BHP-HR	FUEL RATE GPH	INTAKE MFLD P IN-HG	INTAKE AIR FLOW CFM	EXH STACK TEMP DEG F	EXH GAS FLOW CFM
60	100	96	156.79	0.38	5.14	34.47	218.95	971.6	512.06
45.5	76	73	118.93	0.4	4.13	28.19	204.83	879.44	459.09
30.3	50	48	79.28	0.44	3.02	20.4	187.17	753.08	391.99
15.1	25	24	39.64	0.49	1.69	9.86	158.92	535.1	278.99
6.1	10	10	15.87	0.73	1.01	5.33	144.79	388.22	222.48

Engine Heat Rejection Data

GEN W/F EKW	PERCENT LOAD	REJ TO JW BTU/MN	REJ TO ATMOS BTU/MN	REJ TO EXHAUST BTU/MN
60	100	2,695.6	654.0	3,798.9
45.5	76	2,161.1	563.0	3,144.9
30.3	50	1,626.5	472.0	2,394.2
15.1	25	955.4	364.0	1,336.4
6.1	10	654.0	307.1	824.6

EMISSIONS DATA

```
                    -      ************************************************** J1
No notes were found for this certification...
```

REFERENCE EXHAUST STACK DIAMETER	0 IN
WET EXHAUST MASS	965.6 LB/HR
WET EXHAUST FLOW (-- STACK TEMP)	--
WET EXHAUST FLOW RATE (32 DEG F AND 29.98 IN HG)	--

DRY EXHAUST FLOW RATE (32 DEG F AND 29.98 IN HG)	--
FUEL FLOW RATE	--

RATED SPEED "Potential site variation"

TOTAL CO LB/HR	PERCENT LOAD	TOTAL HC LB/HR	PART MATTER LB/HR
0	0	.0100	.0000

The powers listed above and all the Powers displayed are Corrected Powers

Identification Reference and Notes

Engine Arrangement:		**Lube Oil Press @ Rated Spd(PSI):**	53.7
Effective Serial No:		**Piston Speed @ Rated Eng SPD(FT/Min):**	--
Primary Engine Test Spec:		**Max Operating Altitude(FT):**	-3,277.6
Performance Parm Ref:		**PEEC Elect Control Module Ref**	
Performance Data Ref:	P4506A	**PEEC Personality Cont Mod Ref**	
Aux Coolant Pump Perf Ref:			
Cooling System Perf Ref:		**Turbocharger Model**	
Certification Ref:	EPA TIER 3 EQUIV	**Fuel Injector**	
Certification Year:		**Timing-Static (DEG):**	--
Compression Ratio:	16.7	**Timing-Static Advance (DEG):**	--
Combustion System:	DI	**Timing-Static (MM):**	--
Aftercooler Temperature (F):	32	**Unit Injector Timing (MM):**	--
Crankcase Blowby Rate(CFH):	--	**Torque Rise (percent)**	0.0
Fuel Rate (Rated RPM) No Load(Gal/HR):	--	**Peak Torque Speed RPM**	1800
Lube Oil Press @ Low Idle Spd(PSI):	58.9	**Peak Torque (LB.FT):**	705.8

Reference Number: NAC305P J1

Parameters Reference:

Caterpillar Confidential: **Green**
Content Owner: Commercial Processes Division
Web Master(s): PSG Web Based Systems Support
Current Date: 1/9/2026, 3:44:59 PM
© Caterpillar Inc. 2026 All Rights Reserved.
Privacy.
Cookie Settings

For Help Desk Phone Numbers Click here

Reference Number: P4506A **Version Symbol:** **Change Level:**

Sales Model: C4.4 DI T **Eff. Serial Number Prefix:** **Engr. Model:**

Description	Answer	Unit
Air Intake System		
The installed system must comply with the system limits below for all emissions certified engines to assure regulatory compliance.		
MAX ALLOW INTAKE RESTR W/CLEAN ELEMENT	12.1	IN WTR
MAX ALLOW INTAKE RESTR W/DIRTY ELEMENT	20.1	IN WTR
ALLOW PRESS DROP-COMPR OUT TO MANF IN	3.0	IN HG
MAX TURBO INLET AIR TEMPERATURE	77	DEG F
Cooling System		
ENGINE ONLY COOLANT CAPACITY	0.0	GAL
REGULATOR START-TO-OPEN TEMP	180	DEG F
REGULATOR FULL OPENING TEMPERATURE	207	DEG F
Engine Spec System		
CYLINDER ARRANGEMENT		
NUMBER OF CYLINDERS	4	CYL
CYLINDER BORE DIAMETER	4.1339	IN
PISTON STROKE	5.0000	IN
TOTAL CYLINDER DISPLACEMENT	269	CU IN
COMPRESSION RATIO (TO ONE)	16.7	
CRANKSHAFT ROTATION (FROM FLYWHEEL END)	CCW	
CYLINDER FIRING ORDER		
STROKES/COMBUSTION CYCLE	4	STROKES
Exhaust System		
The installed system must comply with the system limits below for all emissions certified engines to assure regulatory compliance.		
Fuel System		
MAX ALLOW FUEL SUPPLY LINE RESTRICTION	11.8	IN HG
MAX ALLOW FUEL RETURN LINE RESTR	14.8	IN HG
FUEL SYSTEM TYPE		
Lube System		
MAXIMUM ALLOWABLE OIL TEMP	257	DEG F
MIN LI OP W/SAE 10W30 OIL @ 99 DEG C	0.0	PSI
Mounting System		
ENG WET WT W/OIL AND WATER W/O FUEL	988	LB
DRY WT ENG ONLY (DRAINED OF FLUIDS)	968	LB
ENGINE LENGTH	50.3936	IN
ENGINE HEIGHT	38.0708	IN
ENGINE WIDTH	28.2283	IN

Caterpillar Confidential: **Green**
Content Owner: Commercial Processes Division
Web Master(s): PSG Web Based Systems Support
Current Date: 1/9/2026, 3:45:45 PM
© Caterpillar Inc. 2026 All Rights Reserved.
Privacy.
Cookie Settings

Engine Controller

ADEM™ A4 Engine Controller

The ADEM™ A4 is the main Electronic Control Module (ECM) used on select diesel engines. The ADEM A4 provides a higher degree of control over a large number of combustion variables. The ADEM A4 is designed to control/interface Electronic Unit Injector (EUI) equipped engines. The ADEM A4 engine system is composed of the ADEM A4 ECM, control software, sensors, actuators, fuel injectors, and interface to the generator system. The prime benefit of an ADEM A4 engine system is to better control and maintain the particulate emissions, both steady state and transient, while improving engine performance.

Features

Reliable, Durable

All ADEM A4 controllers are designed to survive the harshest environments.

- Environmentally sealed, die-cast aluminum housing solates and protects electronic components from moisture and dirt contamination
- Rigorous vibration testing ensures product reliability and durability
- Accuracy maintained from –40°C to 85°C
- Electrical noise immunity to 100 volts / meter
- Internal circuits are designed to withstand shorts to + battery and – battery

Simple Servicing

Each ADEM A4 system works in combination with the Cat® ET service tool software to keep the engine operating at peak performance.

- Displays measured parameters
- Retrieves active and logged event code documenting abnormal system operation
- Performs calibrations and diagnostic tests
- Supports flash programming of new software into the ADEM A4 ECM

Self Diagnostics

Each ADEM A4 ECM has a full compliment of diagnostics. The ECM can detect faults in the electrical system and report those faults to the service technician for quick repair.

- Self-diagnostic capability pinpoints operational prob-lems in need of attention.

Advanced Features

- Enhanced performance from fuel injection timing and limiting
- Adjustable monitoring of vital engine parameters
- Programmable speed acceleration ramp rate
- Data link interfaces

Description

The ECM is housed in an environmentally sealed cast-ing. All wiring connections to the ECM are made using two sealed connectors: a single seventy-pin connector and a single one hundred twenty-pin connector.

Engine Speed Governing

Desired engine speed is calculated by the ECM and held within ±0.2 Hz for isochronous and droop mode. The ECM accounts for droop that is requested. The proper amount of fuel is sent to the injectors due to these calculations. The ECM also employs cooldown/shutdown strategies, acceleration delays on startup, acceleration ramp times and speed reference.

Fuel Limiting

Warm and cold fuel-air ratio control limits are con-trolled by the ECM. Electronic monitoring system derates, torque limit, and cranking limit, programmable torque scaling, and cold cylinder cutout mode are standard features.

Fuel Injection Timing

Master timing for injection is controlled by the ECM control. Temperature dependencies are accounted for in the fuel injection calculations.

Electronic Monitoring

Electronic monitoring of vital engine parameters can be programmed. Warning, derate, and shutdown event conditions may be customized by the user.

Information Management

The ECM stores information to assist with electronic troubleshooting. Active and logged diagnostic codes, active events, logged events, fuel consumption, engine hours, and instantaneous totals aid service technicians when diagnosing electronic faults and scheduling preventive maintenance.

Calibrations

Engine performance is optimized through injection timing. Auto/manual sensor calibrations are standard features.

On-Board System Tests

System tests are available to assist in electronic trou-bleshooting. These tests include: injector activation, injector cutout, and override of control outputs.

Data Link Interfaces

The ADEM A4 communicates with the EMCP via a dedicated communication network.

Electronic Sensing

The following sensing is available on the ADEM A4: oil pressure, fuel pressure, fuel temperature, atmospheric pressure, air inlet temperature, turbo outlet pressure, engine coolant temperature, engine speed, throttle, position, exhaust temperature, oil filter pressure differential, fuel filter pressure differential, air filter pressure differential and crankcase pressure.

SPECIFICATIONS

Impervious to:

Salt spray, fuel, oil and oil additives, coolant, spray cleaners, chlorinated solvents, hydrogen sulfide and methane gas, and dust.

Input and output protection

All inputs and outputs are protected against short circuits to +battery and –battery

Input voltage range (24 VDC nominal)

18 to 32 VDC

Mounting

Engine mounted

Reverse polarity protected

Shock, withstands 20g

Temperature range

Operating: –40°C to 85°C (–40°F to 185°F)
Storage: –50°C to 120°C (–58°F to 248°F)

Vibration

Withstands 8.0g @ 24 to 2 kHz

Information contained in this publication may be considered confidential. Discretion is recommended when distributing. Materials and specifications are subject to change without notice.

CAT, CATERPILLAR, LET'S DO THE WORK, their respective logos, "Caterpillar Yellow," the "Power Edge" and Cat "Modern Hex" trade dress as well as corporate and product identity used herein, are trademarks of Caterpillar and may not be used without permission.

©2019 Caterpillar
All rights reserved.

LEHE5347-03 (02/19)

CATERPILLAR®

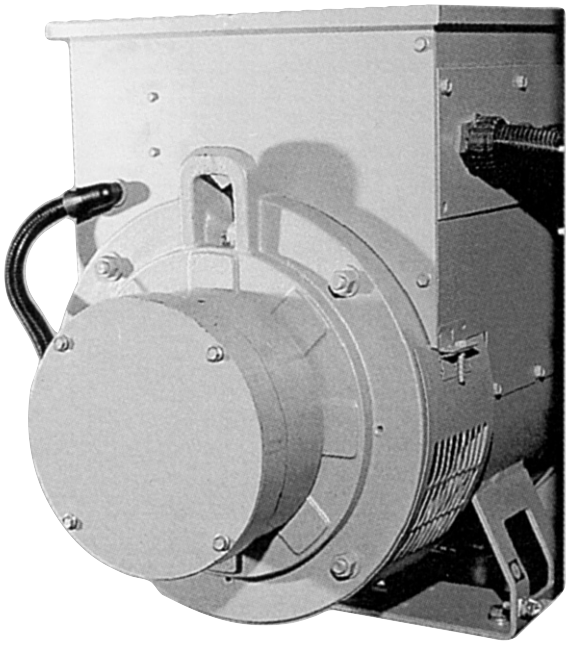

AVR12 – PERMANENT MAGNET GENERATOR

The permanent magnet generator (PMG) option upgrades the excitation system of the generator from the standard self-excited system to a separately-excited system. The PMG couples to the non-drive end of the generator and provides an independent source of excitation power that ensures initial voltage build-up. The PMG improves the voltage response of the generator during transient load application, such as motor starting, and provides a sustained short-circuit current for the operation of protective devices. Isolation of the excitation power ensures that regulation is not affected by non-linear distorting loads.

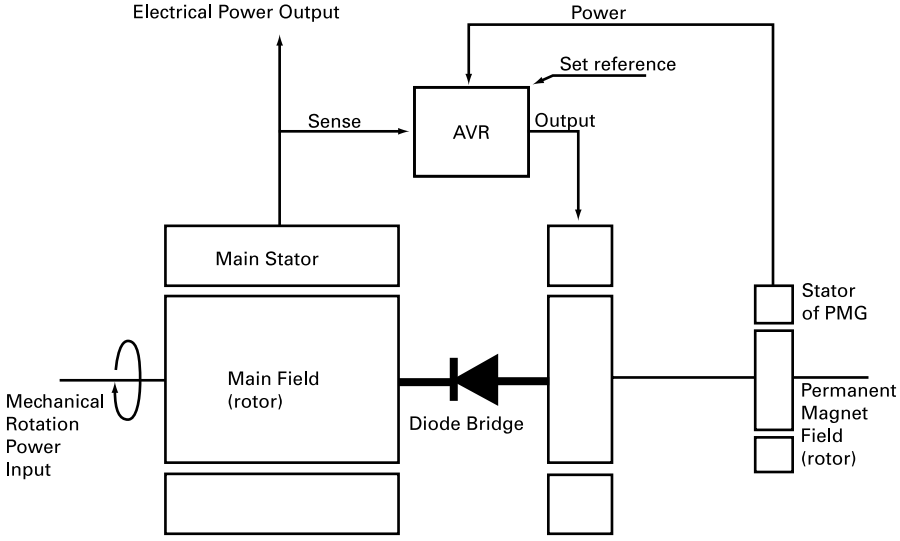

BLOCK DIAGRAM OF PMG

Information contained in this publication may be considered confidential.
Discretion is recommended when distributing.
Materials and specifications are subject to change without notice.

© 2005 Caterpillar
All Rights Reserved.
Printed in U.S.A.

Automatic Voltage Regulator

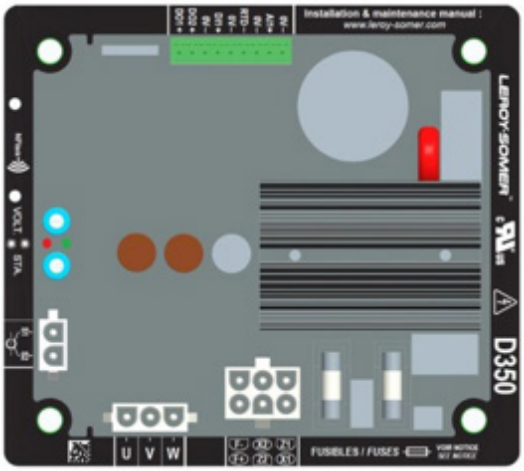

D350AVR

The D350, Digital Voltage Regulator is used to regulate alternators with a field current of less than 5 A in continuous operations, and 10 A maximum in the event of short-circuit for 10 seconds maximum.

Its design is in accordance with mounting in a generator terminal box or a control cabinet. It is required, at a minimum, to follow the local protection and safety standards, especially those specific to electrical installations for voltages of 300 VAC phase-to-neutral maximum.

NFLink™ configuration module

The D350 is equipped with NFC technology for communication and configuration purposes. The configuration module is placed over the two dedicated positioning holes on the plastic enclosure as shown below. Once the configuration is done, the NF Link must be removed as it is not supposed to be left on the D350 when it is in continuous operation.

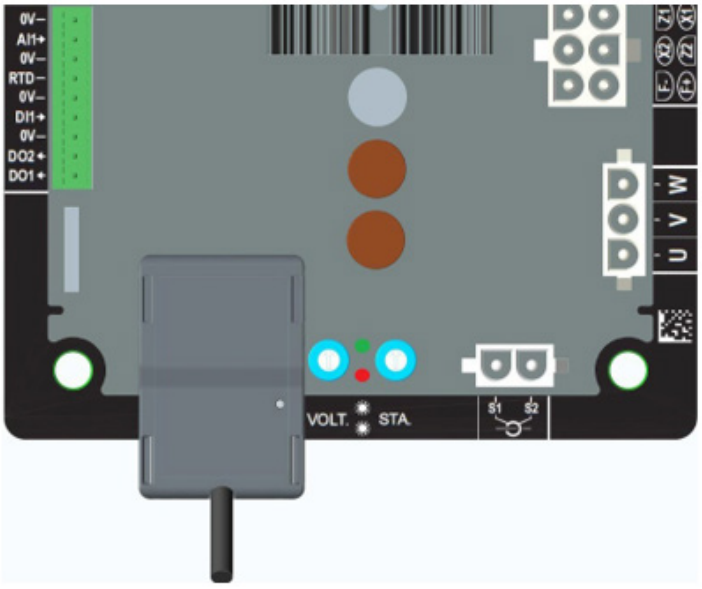

Technical Characteristics

D350 regulator can be used to perform the following functions:

Voltage regulation

- With or without reactive droop compensation (Reactive droop to allow parallel operation)
- With or without line droop compensation

Regulation of the field current, or manual mode, which allows direct control of the field current.

The D350 can also be used to:

- Adjust the reference for the regulation mode in progress, using an analogue input (0 – 10V and potentiometer)
- Monitoring of temperature sensor (Pt100 or CTP)
- Limit the minimum field current delivered to the exciter field
- Monitoring of the maximum stator current limit
- Loss of voltage sensing
- Withstand a sudden short-circuit for 10 seconds maximum in AREP, PMG
- Signals monitoring (events logger)
- 2 digital outputs for various trip, regulation mode and measurement data

Alternator voltage sensing:

- 3 phases without neutral, 2 phases or 1 phase with neutral
- Three-phase range 0 – 530 VAC
- Consumption < 2 VA

Stator current measurement with CT:

- Range 0 –1A or 0 – 5A
- Consumption < 2 VA

Power supply:

- 4 terminals for PMG, AREP, SHUNT
- Range 50 – 277 VAC
- Consumption max < 3000 VA

Field excitation:

- Rated 0 – 5A
- Short-circuit 10A max

Frequency:

- Range 10-100 Hz
- Regulation accuracy: +/-0.25% of the average of the three phases on a linear load, with harmonic distortion less than 5%
- Voltage adjustment range: 0 to 150% of the rated voltage
- Quadrature droop adjustment range: -20% to 20%
- Under frequency protection: integrated, adjustable threshold, slope adjustable from 0.5 to 3V/Hz in steps of 0.1 V/Hz
- Excitation ceiling: adjustable by configuration at 3 points
- Environment: ambient temperature from -40°C to +65°C, relative humidity of less than 95% non-condensing, mounted in a cabinet or in a terminal box

Easy Reg Advanced:

- All the D350 settings are entered/configured using the "EasyReg Advanced" software
- This program is only compatible with computers running WINDOWS® versions of Windows 7 Windows 10 , Windows 11 and above operating systems.

Dimensions:

- Height: 52.9 mm
- Width: 125 mm
- Length: 140 mm

Mounting:

- Holes spacing on the Length: 115 mm
- Holes spacing on the width: 100 mm

Weight:

- 0.45 kg

Conformity to standards:

- EMC: IEC 61000-6-2, IEC 61000-6-4
- Humidity: IEC 60068-1 and test in accordance with IEC 60068-2-14
- Dry heat: IEC 60068-2-2
- Damp heat: IEC 60028-2-30
- Cold: IEC 600068-2-1

D350 AVR and NFLink™ Dimensions

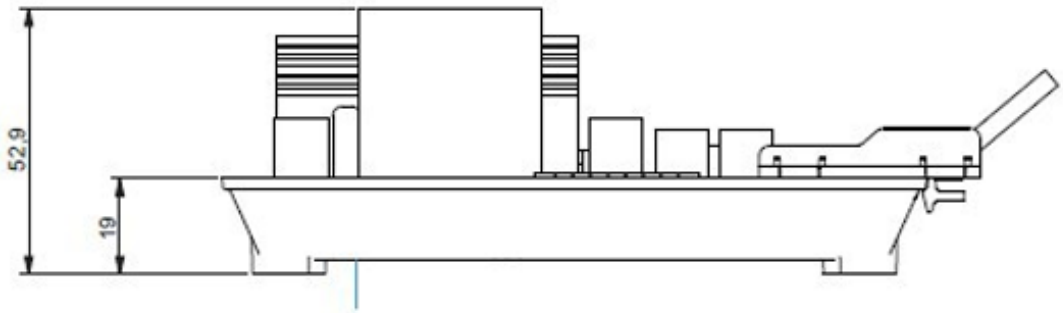

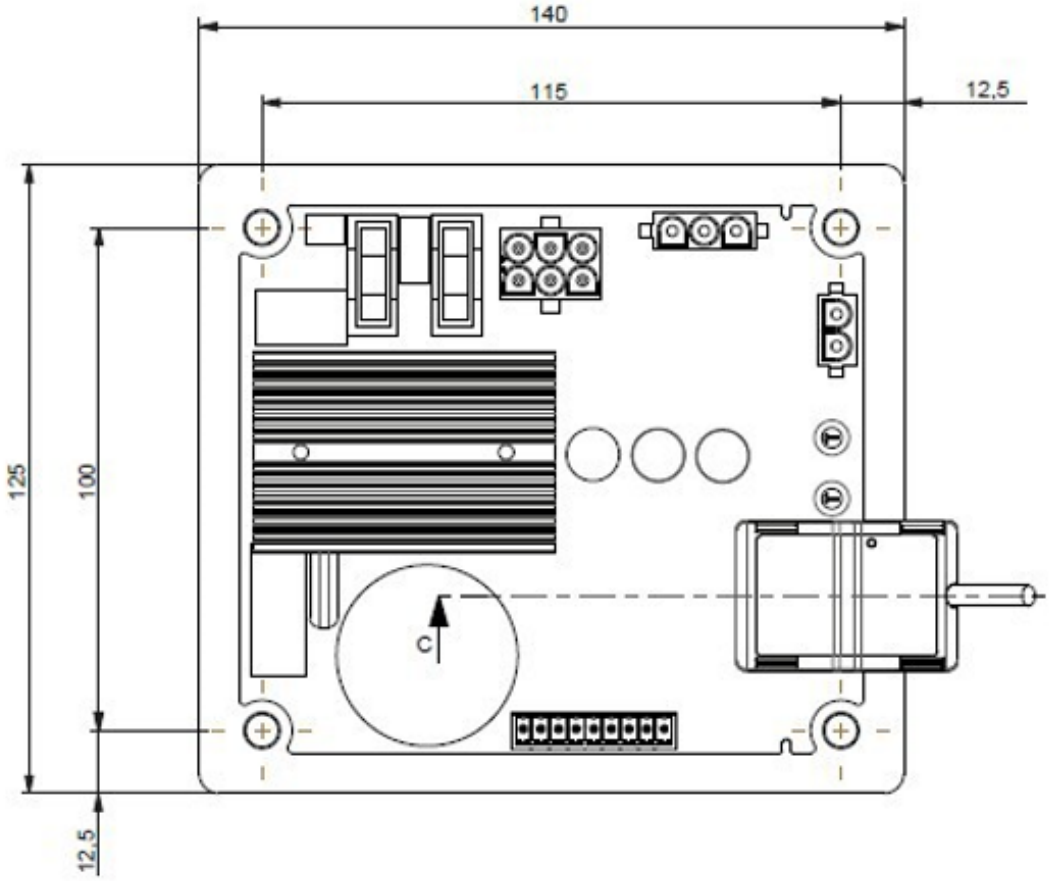

LET'S DO THE WORK.™

www.cat.com/electricpower
©2025 Caterpillar
All rights reserved.
Materials and specifications are subject to change without notice.
The International System of Units (SI) is used in this publication. CAT, CATERPILLAR, LET'S DO THE WORK, their respective logos, "Caterpillar Corporate Yellow", the "Power Edge" and Cat "Modern Hex" trade dress as well as corporate and product identity used herein, are trademarks of Caterpillar and may not be used without permission.

LEHE1923-01 (03/25)

GCCP 1.2
Control Panel

Image shown may not reflect actual configuration.

GCCP 1.2 – Control Panel

GCCP 1.2 is an Auto Start Control Module suitable for a wide variety of diesel gen-set applications. Monitoring an extensive number of engine parameters, the modules will display warnings, shutdown and engine status information on the back-lit LCD screen, illuminated LEDs and remote PC.

Description

The controller is compatible with electronic (CAN) and non-electronic (magnetic pick-up/alternator sensing) engines and offer an extensive number of flexible inputs, outputs and extensive engine protections so the system can be easily adapted to meet the most demanding industry requirements.

The extensive list of features includes enhanced event and performance monitoring, remote communications & PLC functionality. The modules can be easily configured using a configuration suite PC software.

Full Range of Attachments

- Wide range of system expansion attachments, designed specifically to work with the GCCP controller
- Flexible packaging options for easy and cost effective installation

Benefits

- Hours counter provides accurate information for monitoring and maintenance periods
- User-friendly set-up and button layout for ease of use
- Multiple parameters are monitored & displayed simultaneously for full visibility
- The module can be configured to suit a wide range of applications for user flexibility
- PLC editor allows user configurable functions to meet user specific application requirements
- RS485 Communication port can be used for the Remote Monitoring Communication (Compatible with Cat PLG)

World Wide Product Support

- Cat dealers provide extensive pre and post sale support
- Cat dealers have over 1,600 dealer branch stores operating in 200 countries

Features

- 4-line back-lit LCD text display
- Multiple display languages
- Five-key menu navigation
- LCD alarm indication
- Customisable power-up text and images
- Data logging facility
- Internal PLC editor
- Protections disable feature
- Fully configurable via PC using USB & RS485 communication
- Front panel configuration with PIN protection
- Power save mode
- 3-phase generator sensing and protection
- Generator current and power monitoring (kW, kvar, kVA, pf) kW and kvar overload and reverse power alarms
- Over current protection
- Unbalanced load protection
- Breaker control via fascia buttons
- Fuel and start outputs configurable when using CAN Support for 0V to 10V & 4 mA to 20 mA sensors
- 8 Configurable digital inputs (3 available for Customer use)
- 8 Configurable digital outputs (5 available for Customer use)
- 4 Configurable analogue inputs (3 available for Customer use)
- CAN, MPU and alternator frequency speed sensing in one variant
- Real time clock
- Engine pre-heat and post-heat functions
- Engine run-time scheduler
- Engine idle control for starting & stopping
- Fuel usage monitor and low fuel level alarms
- 3 Configurable maintenance alarms
- MODBUS RTU support
- User configurable MODBUS pages

SPECIFICATIONS

DC SUPPLY

CONTINUOUS VOLTAGE RATING

8V to 35V continuous
5V for upto 1 minute

CRANKING DROPOUTS

Able to survive 0V for 100 mS, providing supply was at least 10V before dropout and supply recovers to 5V. This is achieved without the need for internal batteries.

LEDs and backlight will not be maintained during cranking

MAXIMUM OPERATING CURRENT

260 mA at 12V, 150 mA at 24V

MAXIMUM STANDBY CURRENT

145 mA at 12V, 85 mA at 24V

CHARGE FAIL/EXCITATION RANGE

0V to 35V

GENERATOR & MAINS (UTILITY) VOLTAGE RANGE

15V to 415 V AC (Ph to N)
26 V to 719 V AC (Ph to Ph)

MAGNETIC PICK-UP VOLTAGE RANGE

+/- 0.5 V to 70 V

FREQUENCY RANGE

10,000 Hz (max)

INPUTS

DIGITAL INPUTS A TO H

Negative switching

ANALOGUE INPUTS A TO D

Configurable as:

Negative switching digital input 0-10V sensor 4 mA to 20 mA Resistive Sensor

ANALOGUE INPUTS A TO C

Configurable as:

Negative switching digital input Resistive Sensor

OUTPUTS

OUTPUT A and B (FUEL & START)

15 A DC at supply voltage

AUXILIARY OUTPUTS C, D, E, F, G, H, I & J 2

A DC at supply voltage

DIMENSIONS

OVERALL

216 mm x 158 mm x 43 mm
8.5" x 6.2" x 1.5"

PANEL CUTOUT

184 mm x 137 mm
7.2" x 5.3"

MAXIMUM PANEL THICKNESS

8 mm
0.3"

OPERATING TEMPERATURE

-30ºC to +70ºC
-22ºF to +158ºF

STORAGE TEMPERATURE RANGE

-40ºC to +85ºC
-40ºF to +185ºF

STANDARDS

UL, cUL Listed

NFPA 70#

Electro-Magnetic Compatibility: BS EN 61000-6-2/6-4 Electrical Safety: BS EN 60950

Temperature: BS EN 60068-2-1, BS EN 60068-2-2

Vibration: BS EN 60068-2-6

Humidity: BS EN 60068-2-30, BS EN 60068-2-78 Shock: BS EN 60068-2-27

Degrees of protection provided by enclosures: BS EN 60529 Ingress Protection: IP65 – Front of module when installed into the control panel with the optional sealing gasket

Applicable codes and standards facilitate compliance to NFPA 70

OPTIONAL MODULES

Remote annunciator

The Remote annunciator with an integral sounder is an output LED expansion module is designed to display a maximum of eight individual LED indications up to a maximum distance of 1 km (0.6 miles). The annunciator will consist of two modules to provide a 16 Channel Fault annunciation. The Panels are fitted with removable label cards which can be used to identify the standard NFPA alarms.

Key Features:

- Panel mount
- Vertical design
- In-built alarm
- Alarm mute button
- Max of 80 configurable LED's

Input Expansion Module

The Input Expansion module is used in conjunction with supported GCCP controllers to provide additional, flexible, input functionality. The module's ID switch is configurable from the module and the 10 inputs can be configured from within the 'host controller'. The inputs can be configured in a number of ways to connect to digital switches, resistive sensors, 0-10V DC signals or 4-20 mA signals.

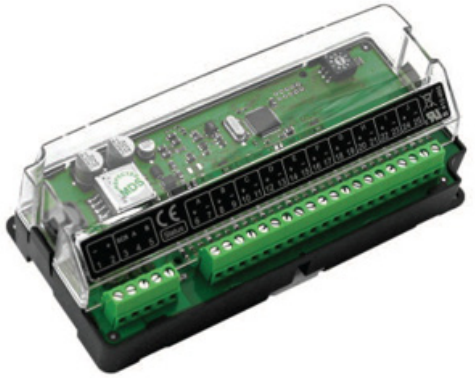

Key Features:

- DIN rail & chassis mount
- Power on/link lost LED
- 1.2 km (0.75 Mile) working range
- Connect maximum of 4 x Input Modules to a single host controller
- Max of 40 configurable inputs

Output Expansion Module

The output relay expansion module for use with compatible GCCP control modules has been designed to extend a host module's output capabilities.
A maximum of 10 relays can be connected to an individual module at any one time.
All outputs are configurable via the host controller.

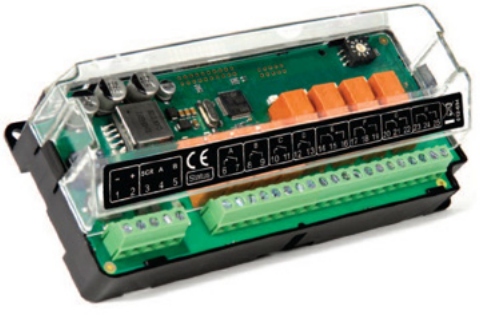

Key Features:

- Power On/Link Lost LED ID SWITCH
- 10 Expansion modules can be connected to 1 host controller at a time
- 8 Configurable relay contacts with LED indicators:
  - o 4 Normally Open (N/O)
  - o 4 Change Over (C/O)
- Terminal strip connection for quick and easy set-up

LET'S DO THE WORK.™

LEHE2017-06 (02/25)

www.cat.com/electricpower
©2025 Caterpillar
All rights reserved.
Materials and specifications are subject to change without notice.
The International System of Units (SI) is used in this publication. CAT, CATERPILLAR, LET'S DO THE WORK, their respective logos, "Caterpillar Corporate Yellow", the "Power Edge" and Cat "Modern Hex" trade dress as well as corporate and product identity used herein, are trademarks of Caterpillar and may not be used without permission.

5 OPERATION

NOTE: The following descriptions detail the sequences followed by a module containing the standard 'factory configuration'. Always refer to your configuration source for the exact sequences and timers observed by any particular module in the field.

5.1 QUICKSTART GUIDE

This section provides a quick start guide to the module's operation.

5.1.1 STARTING THE ENGINE

NOTE: For further details, see the section entitled *Operation* elsewhere in this document.

5.1.2 STOPPING THE ENGINE

NOTE: For further details, see the section entitled *Operation* elsewhere in this document.

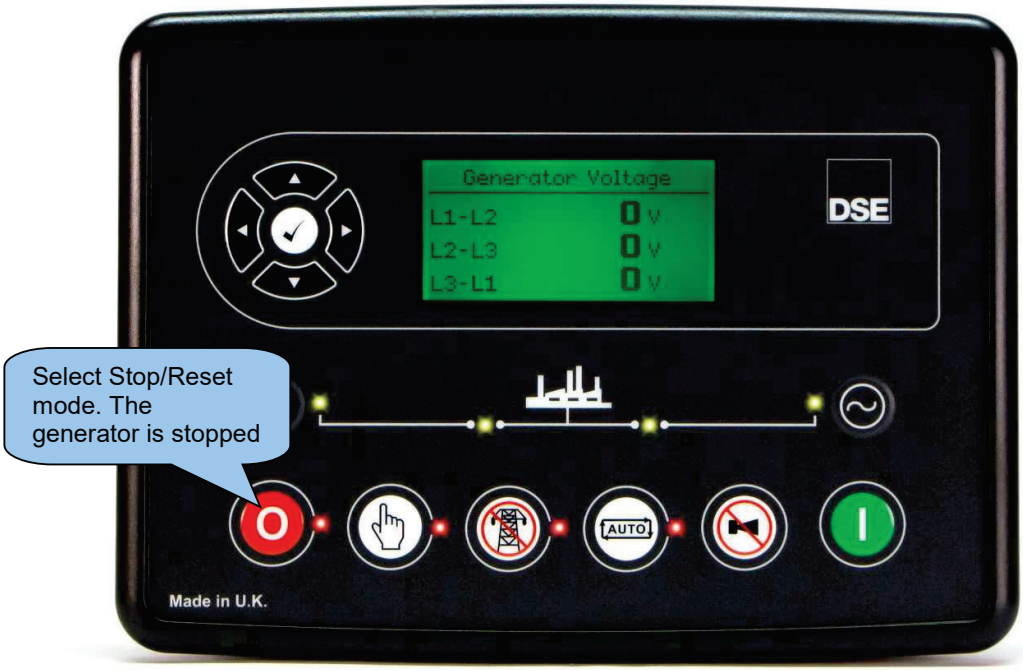

5.2 STOP/RESET MODE

NOTE: If a digital input configured to *Panel Lock* is active, changing module modes is not possible. Viewing the instruments and event logs is NOT affected by *Panel Lock*.

NOTE: For further details of module configuration, refer to DSE Publication: 057-288 *DSE6310 & DSE6320 Configuration Suite PC Software Manual.*

Stop/Reset Mode is activated by pressing the ***Stop/Reset Mode*** button.
The LED above the ***Stop/Reset Mode*** button illuminates to indicate ***Stop/Reset Mode*** operation.

In ***Stop/Reset Mode***, the module removes the generator from load (if necessary) before stopping the generator.

If the generator does not stop when requested, the *Fail To Stop* alarm is activated (subject to the setting of the *Fail to Stop* timer). To detect the engine at rest the following must occur:

- Engine speed is zero as detected by the CAN ECU
- Generator AC Voltage and Frequency must be zero.
- Engine Charge Alternator Voltage must be zero.
- Oil pressure sensor must indicate low oil pressure

When the engine has stopped and the module is in the ***Stop/Reset Mode***, it is possible to send configuration files to the module from DSE Configuration Suite PC software and to enter the Front Panel Editor to change parameters.

Any latched alarms that have been cleared are reset when ***Stop/Reset Mode*** is entered.

The engine is not started when in ***Stop/Reset Mode***. If start signals are given, the input is ignored until ***Auto Mode*** is entered.

When left in ***Stop/Reset Mode*** with no presses of the fascia buttons, no form of communication active and configured for *Power Save Mode,* the module enters *Power Save Mode*. To 'wake' the module, press any fascia control buttons.

5.2.1 ECU OVERRIDE

Pressing the ***Start*** button in ***Stop/Reset Mode*** powers up the engine's ECU but does not start the engine. This can be used to check the status of the CAN communication and to prime the fuel system.

5.3 MANUAL MODE

NOTE: If a digital input configured to Panel Lock is active, changing module modes is not possible. Viewing the instruments and event logs is NOT affected by panel lock.

Manual Mode is activated by pressing the ***Manual Mode*** button.
The LED above the ***Manual Mode*** button illuminates to indicate ***Manual Mode*** operations.

In ***Manual Mode*** the generator does not start automatically
To begin the starting sequence, press the ***Start*** button.

5.3.1 STARTING SEQUENCE

NOTE: There is no *Start Delay* in this mode of operation.

NOTE: If the unit has been configured for CAN, compatible ECU's receives the start command via CAN.

NOTE: For further details of module configuration, refer to DSE Publication: *057-288 DSE6310 & DSE6320 Configuration Software Manual.*

The fuel relay is energised and the engine is cranked.

If the engine fails to fire during this cranking attempt then the starter motor is disengaged for the *Crank Rest Timer* duration after which the next start attempt is made. Should this sequence continue beyond the set *Number Of Attempts*, the start sequence is terminated and the display shows *Fail to Start.*

The starter motor is disengaged when the engine fires. Speed detection is factory configured to be derived from the AC alternator output frequency, but can additionally be measured from a Magnetic Pickup mounted on the flywheel or from the CANbus link to the engine ECU depending on module configuration.

Additionally, rising oil pressure can be used to disconnect the starter motor (but cannot detect underspeed or overspeed).

After the starter motor has disengaged, the *Safety On Delay* timer activates, allowing Oil Pressure, High Engine Temperature, Under-speed, Charge Fail and any delayed Auxiliary fault inputs to stabilise without triggering the fault.

5.3.2 ENGINE RUNNING

NOTE: The load transfer signal remains inactive until the generator is available. This prevents excessive wear on the engine and alternator.

NOTE: For further infomration on enabling *Manual Breaker Control*, refer to DSE Publication: *057-288 DSE6310 & DSE6320 Configuration Software Manual.*

When in ***Manual Mode*** the load is transferred to the generator whenever a 'loading request' is made. The possible sources for 'loading requests' are limited dependant on the state of the *Manual Breaker Control* function.

5.3.2.1 MANUAL BREAKER CONTROL DISABLED

A loading request may come from any of the following sources:

- Press the Transfer to Generator button.
- Failure of mains supply (DSE6320 only)
- Activation of an auxiliary input that has been configured to *Remote Start On Load, Transfer To Generator / Open Mains* or *Auxiliary Mains Fail* (DSE6320 only).
- Activation of the inbuilt exercise scheduler if configured for 'on load' runs.
- Activation of *Dual Mutual Standby Balance Mode*, see section entitled *Operation* (*Dual Mutual Standby*) elsewhere in this document for more information.
- Instruction from external remote telemetry devices using the RS485 or Ethernet interface.

Once the generator is placed on load, it will not automatically be removed. Depending on loading request state, one of the following methods is used to manually open the load switch:

- If the loading request has been removed:
  - Press the ***Open Generator*** (DSE6310 only) or ***Transfer to Mains*** (DSE6320 only) button
  - Activation of an auxiliary input that has been configured to *Transfer To Mains / Open Generator.*
  - Press the ***Auto Mode*** button to return to automatic mode. The set observes all ***Auto Mode*** start requests and stopping timers before beginning the *Auto Mode Stopping Sequence*.

- If the loading request remains active:
  - Press the ***Stop/Reset Mode*** button to remove load and stop the generator.
  - Activation of an auxiliary input that has been configured to *Generator Load Inhibit.*

5.3.2.2 MANUAL BREAKER CONTROL ENABLED

Loading request sources are limited to:

- Press the Transfer to Generator button.
- Activation of an auxiliary input that has been configured to *Transfer To Generator / Open Mains.*

Once the generator is placed on load, it will not automatically be removed. Any one of the following methods are used to manually open the load switch:

- Press the ***Open Generator*** (DSE6310 only) or ***Transfer to Mains*** (DSE6320 only) button
- Activation of an auxiliary input that has been configured to *Transfer To Mains / Open Generator.*
- Press the ***Auto Mode*** button to return to automatic mode. The set observes all ***Auto Mode*** start requests and stopping timers before beginning the *Auto Mode Stopping Sequence*.
- Press the ***Stop/Reset Mode*** button to remove load and stop the generator.
- Activation of an auxiliary input that has been configured to *Generator Load Inhibit.*

5.3.3 STOPPING SEQUENCE

In ***Manual Mode*** the set continues to run until either:

- The ***Stop/Reset Mode*** button is pressed – The delayed load outputs are de-activated immediately and the set immediately stops.
- The ***Auto Mode*** button is pressed. The set observes all ***Auto Mode*** start requests and stopping timers before beginning the *Auto Mode Stopping Sequence*.

5.4 TEST MODE

NOTE: If a digital input configured to *Panel Lock* is active, changing module modes is not possible. Viewing the instruments and event logs is NOT affected by *Panel Lock*.

Test Mode is activated by pressing the ***Test Mode*** button.
The LED above the ***Test Mode*** button illuminates to indicate ***Test Mode*** operations.

In ***Test Mode***, the set does not start automatically.
To begin the starting sequence, press the ***Start*** button.

5.4.1 STARTING SEQUENCE

NOTE: There is no *Start Delay* in this mode of operation.

NOTE: If the unit has been configured for CAN, compatible ECU's receives the start command via CAN.

NOTE: For further details of module configuration, refer to DSE Publication: *057-288 DSE6310 & DSE6320 Configuration Software Manual.*

The fuel relay is energised and the engine is cranked.

If the engine fails to fire during this cranking attempt then the starter motor is disengaged for the *crank rest* duration after which the next start attempt is made. Should this sequence continue beyond the set number of attempts, the start sequence is terminated and the display shows *Fail to Start.*

The starter motor is disengaged when the engine fires. Speed detection is factory configured to be derived from the AC alternator output frequency, but can additionally be measured from a Magnetic Pickup mounted on the flywheel or from the CANbus link to the engine ECU depending on module configuration.

Additionally, rising oil pressure can be used to disconnect the starter motor (but cannot detect underspeed or overspeed).

After the starter motor has disengaged, the *Safety On Delay* timer activates, allowing Oil Pressure, High Engine Temperature, Under-speed, Charge Fail and any delayed Auxiliary fault inputs to stabilise without triggering the fault.

5.4.2 ENGINE RUNNING

NOTE: The load transfer signal remains inactive until the generator is available. This prevents excessive wear on the engine and alternator.

In ***Test Mode***, the load is automatically transferred to the generator.

Once the generator has been placed on load, it is not automatically removed. To manually remove the load either:

Press the ***Manual Mode*** button followed by the ***Open Generator*** (DSE6310 only) or ***Transfer to Mains*** (DSE6320 only) button.

- Press the ***Auto Mode*** button to return to automatic mode. The set observes all ***Auto Mode*** start requests and stopping timers before beginning the *Auto Mode Stopping Sequence*.
- Press the ***Stop/Reset Mode*** button to remove load and stop the generator.
- Activation of an auxiliary input that has been configured to *Generator Load Inhibit.*

5.4.3 STOPPING SEQUENCE

In ***Test Mode*** the set continues to run until either:

- The ***Stop/Reset Mode*** button is pressed – The delayed load outputs are de-activated immediately and the set immediately stops.
- The ***Auto Mode*** button is pressed. The set observes all ***Auto Mode*** start requests and stopping timers before beginning the *Auto Mode Stopping Sequence*.

5.5 AUTOMATIC MODE

NOTE: If a digital input configured to external *Panel Pock* is active, changing module modes is not possible. Viewing the instruments and event logs is NOT affected by *Panel Lock*.

Auto Mode is activated by pressing the ***Auto Mode*** button.
The LED above the ***Auto Mode*** button illuminates to indicate ***Auto Mode*** operations.

Auto Mode allows the generator to operate fully automatically, starting and stopping as required with no user intervention.

5.5.1 WAITING IN AUTO MODE

If a starting request is made, the starting sequence begins.
Starting requests can be from the following sources:

- Failure of mains supply (DSE6320 only)
- Activation of an auxiliary input that has been configured to *Remote Start*
- Activation of an auxiliary input that has been configured to *Auxiliary Mains Fail* (DSE6320 only).
- Activation of the inbuilt exercise scheduler.
- Instruction from external remote telemetry devices using the RS232 or RS485 interface.
- Activation of *Dual Mutual Standby Balance Mode*, see section entitled *Operation (Dual Mutual Standby)* elsewhere in this document for more information.

5.5.2 STARTING SEQUENCE

NOTE: If the unit has been configured for CAN, compatible ECU's receive the start command via CAN and transmit the engine speed to the DSE controller.

NOTE: For further details of module configuration, refer to DSE Publication: *057-288 DSE6310 & DSE6320 Configuration Software Manual.*

To allow for 'false' start requests, the *Start Delay* timer begins.

Should all start requests be removed during the *Start Delay* timer, the unit returns to a stand-by state.

If a start request is still present at the end of the *Start Delay* timer, the fuel relay is energised and the engine is cranked.

If the engine fails to fire during this cranking attempt then the starter motor is disengaged for the *Crank Rest* duration after which the next start attempt is made. Should this sequence continue beyond the *Set Number Of Attempts*, the start sequence is terminated and the display shows *Fail to Start.*

The starter motor is disengaged when the engine fires. Speed detection is factory configured to be derived from the AC alternator output frequency, but can additionally be measured from a Magnetic Pickup mounted on the flywheel or from the CAN link to the engine ECU depending on module.

Additionally, rising oil pressure can be used to disconnect the starter motor (but cannot detect underspeed or overspeed).

After the starter motor has disengaged, the *Safety On Delay* timer activates, allowing Oil Pressure, High Engine Temperature, Under-speed, Charge Fail and any delayed Auxiliary fault inputs to stabilise without triggering the fault.

5.5.3 ENGINE RUNNING

NOTE: The load transfer signal remains inactive until the generator is available. This prevents excessive wear on the engine and alternator.

The generator is placed on load if configured to do so.

If all start requests are removed, the *Stopping Sequence* begins.

5.5.4 STOPPING SEQUENCE

The *Return Delay* timer operates to ensure that the starting request has been permanently removed and isn't just a short term removal. Should another start request be made during the cooling down period, the set returns on load.

If there are no starting requests at the end of the *Return Delay* timer, the load is transferred from the generator to the mains supply and the *Cooling Down* timer is initiated.

The *Cooling Down* timer allows the set to run off load and cool sufficiently before being stopped. This is particularly important where turbo chargers are fitted to the engine.

After the *Cooling Down* timer has expired, the set is stopped.

2

ACCESSORIES

Manually Operated Circuit Breakers for D40 GC – D200 GC Diesel Generator Sets

Current (A)	Frame	Number of Poles	Interrupting Ratings (kA ms)			Trip Unit	(#)Lugs Size	Auxilliary Options
			240V	480V	600V			
60	H	3	65	35	18	LSI	(1) 14-2/0 AWG	Form C (1NC & 1NO) Shunt Trip (12V)
100	H	3	65	35	18			
150	H	3	65	35	18			
250	J	3	65	35	18		(1) 1/0-300 kcmil	
400	XT5	3	65	35	18		Bus Bar	1 Form C + 1 Bell Alarm Shunt Trip (12V)
600	XT6	3	65	35	20			
800	XT6	3	65	35	20			

(#) No of Cables per lug.

Diesel D40 GC – D60 GC

First Breaker	Second Breaker
Circuit Breaker (A)	Circuit Breaker (A)
60	60
100	100
150	150
250	—

Diesel D80 GC – D200 GC

First Breaker	Second Breaker
Circuit Breaker (A)	Circuit Breaker (A)
100	60
150	100
250	150
400	250
600	—
800	—

Available Breaker Configurations	
First Breaker	Second Breaker
H	—
H	H
H	J
J	—
J	J
J	H

Available Breaker Configurations		
First Breaker	Second Breaker	
H	H	J
J	H	J
XT5	H	J
XT6	H	J

H-Frame Circuit Breakers

Electronic Trip Unit Long Time/Short Time Trip Curve

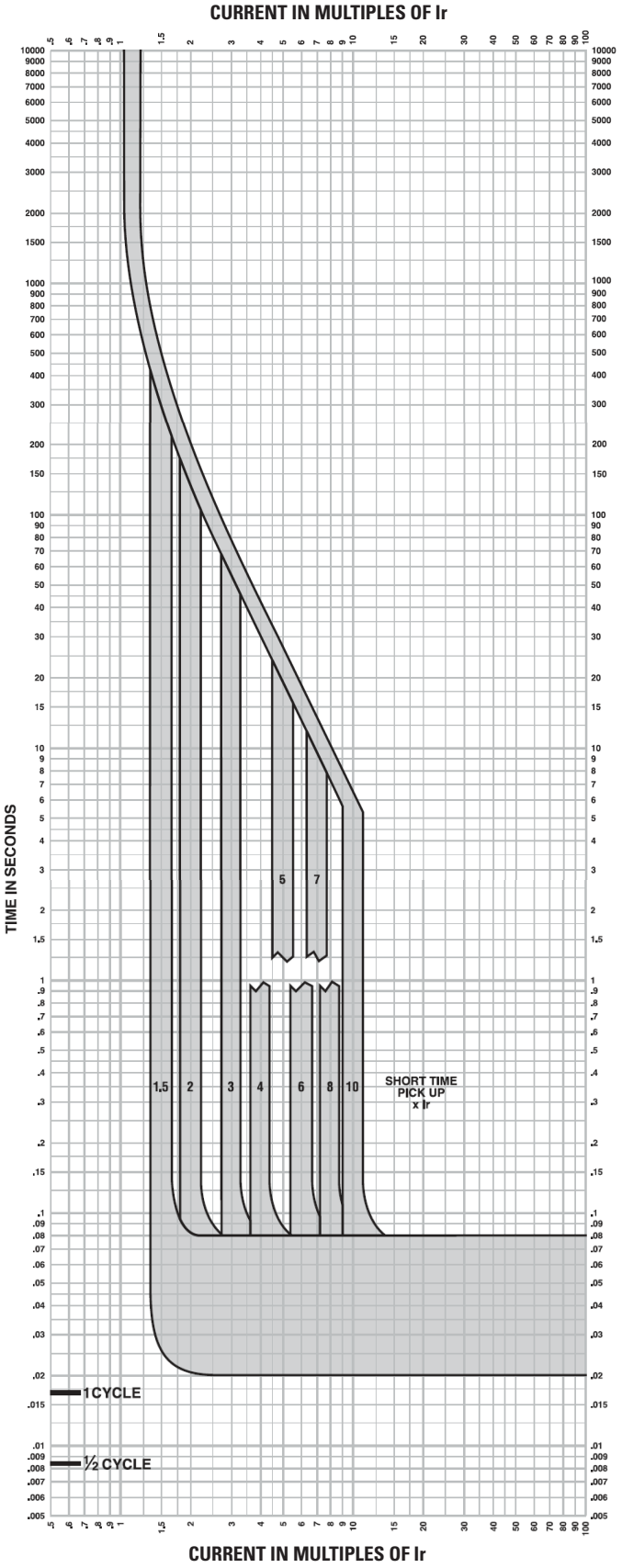

Long Time/Short Time Trip Curve 60A, 100A, 150A H-Frame

The time-current curve information is to be used for application and coordination purposes only.

Notes

1. There is a thermal-imaging effect that can act to shorten the long-time delay. The thermal-imaging effect comes into play if a current above the long-time delay pickup value exists for a time and then is cleared by the tripping of a downstream device or the circuit breaker itself. A subsequent overload will cause the circuit breaker to trip in a shorter time than normal. The amount of time delay reduction is inverse to the amount of time that has elapsed since the previous overload. Approximately 20 minutes is required between overloads to completely reset thermal-imaging.
2. Total clearing times shown include the response times of the trip unit, the circuit breaker opening, and the extinction of the current.

   Curves apply from -35ºC to +70ºC (-31ºF to +158ºF) ambient temperature.

Figure 1

H-Frame Circuit Breakers

Electronic Trip Unit Instantaneous Trip Curve

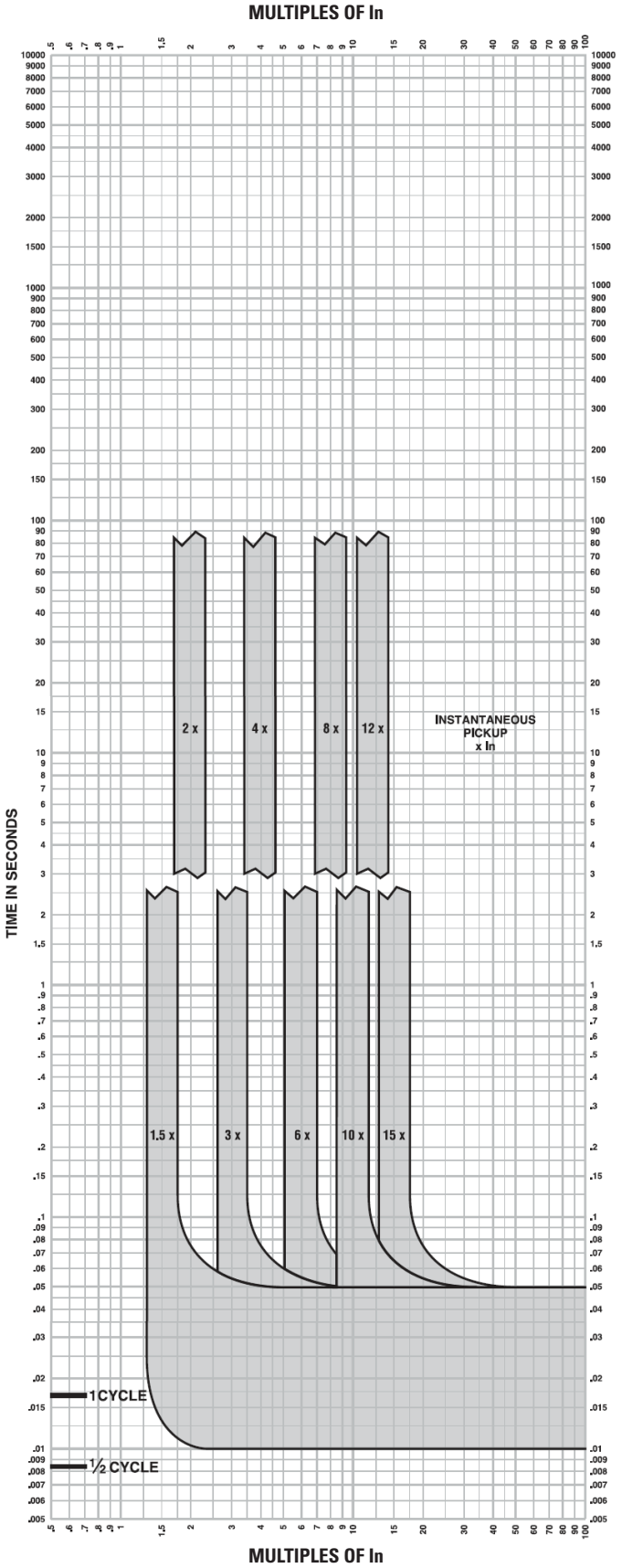

Figure 2

Instantaneous Trip Curve 60A, 100A, 150A H-Frame

The time-current curve information is to be used for application and coordination purposes only.

Notes

1. There is a thermal-imaging effect that can act to shorten the long-time delay. The thermal-imaging effect comes into play if a current above the long-time delay pickup value exists for a time and then is cleared by the tripping of a downstream device or the circuit breaker itself. A subsequent overload will cause the circuit breaker to trip in a shorter time than normal. The amount of time delay reduction is inverse to the amount of time that elapsed since the previous overload. Approximately 20 minutes is required between overloads to completely reset thermal-imaging.
2. Total clearing times shown include the response times of the trip unit, the circuit breaker opening, and the extinction of the current.
3. In = Maximum dial setting of Ir.
   60A H-Frame: In = 60A = Max Ir setting
   100A H-Frame: In = 100A = Max Ir setting
   150A H-Frame: In = 150A = Max Ir setting

Curves apply from -35ºC to +70ºC (-31ºF to +158ºF) ambient temperature.

Attachments

Image shown might not reflect actual configuration.

BATTERY CHARGER

The intelligent battery charger has been developed with safety, usability, optimised battery performance and maximum battery lifetimes in mind.

A comprehensive range of input and output protections ensures a continued safe charging environment also enabling the use of the charger as a power supply.

FEATURES

- Intelligent two, three and four stage charging profiles
- Configurable to suit most battery types (12V/24V)
- Adjustable current limit
- Can be used as a battery charger, power supply or both at the same time
- Automatic or Manual boost and storage charge functions to help maintain battery condition
- Digital Microprocessor Technology
- Temperature compensation for battery charging
- Low Output Ripple and superb line regulation
- Three LED Indicators
- AC input Under voltage
- AC input Over voltage
- Battery charger output Over voltage
- Battery charger output Over current
- Optional battery temperature compensation with over temperature protection
- Output short circuit and Inversion polarity with auto recovery
- Configurable charge termination
- UL1236 /UL1564 Compliant

Automatic Boost Mode
- Boosts and equalises cell charge improving battery performance and life

Power Save Mode
- Once the battery is fully charged the chargers switch to Eco-Power to save energy

Communication
- Can be integrated into external systems through MODBUS RTU using RS485
- Fully configurable via PC Software

BENEFITS

- Fully flexible to maximise the life of the battery
- Suitable for a wide range of battery types
- Switched mode design
- Minimum 86% efficiency throughout full operating range
- No external intervention for boost mode
- Multiple chargers can be linked together to provide larger current output
- Can be permanently connected to battery and mains (utility) supply. No need to disconnect through high load conditions.

SPECIFICATION

AC SUPPLY
VOLTAGE RANGE 90 V to 305 V (L-N)

FREQUENCY RANGE
48 Hz to 64 Hz (L-N)

DC OUTPUT RATING
10 A DC at 24 V DC

RIPPLE AND NOISE
<1%

EFFICIENCY
>86%

REGULATION LINE
<0.5%

LOAD
2%

TEMPERATURE SENSOR INPUT
PT1000

PROTECTIONS
Short Circuit
DC Over Voltage
DC Over Current
Reverse Polarity
Over Temperature
AC Under & Over Voltage

CHARGE FAILURE RELAY
3 A at 30 V DC volt free relay

DIMENSIONS OVERALL
70 mm x200 mm x 130 mm
2.7" x 7.9" x 5.1"

WEIGHT
0.75 kg

OPERATING TEMPERATURE RANGE
-30 °C to +80 °C
-22 °F to +176 °F

STORAGE TEMPERATURE RANGE
-30 °C to +80 °C
-22 °F to +176 °F

www.cat.com/electricpower

©2024 Caterpillar
All rights reserved.
Materials and specifications are subject to change without notice.
The International System of Units (SI) is used in this publication. CAT, CATERPILLAR, LET'S DO THE WORK, their respective logos, "Caterpillar Corporate Yellow" the "Power Edge" and Cat "Modern Hex" trade dress as well as corporate and product identity used herein, are trademarks of Caterpillar and may not be used without permission.

LEHE2022-03 (01/24)

Cat® Batteries

Cat® Batteries—Greater Starting Power—Lower Maintenance—Longer Life

Cat Premium High Output (PHO) batteries are used in all Cat Machines and Engine Gen-Sets. They are designed to meet stringent Caterpillar design specifications, which provide industry leading cold cranking amps (CCA) capability and maximum vibration resistance.

Maintenance Free Accessible or low maintenance designs are available in wet and dry configurations.

General Service Line batteries are available in Maintenance Free Accessible or low maintenance designs. Wide selections of BCI group sizes are available for automotive, light truck, bus, industrial, agricultural, marine, recreational and valve regulated (VRLA-AGM & Gel) applications.

Cat® Batteries

World's Toughest Batteries

Premium High Output—Maximum Vibration Resistance

- Vibration Resistance...five times the Industry Standard
- Exclusive "flat top" BCI group 4D & 8D batteries are Maintenance Free Accessible and have the industries highest cold cranking amps (CCA)
- Popular BCI group 31 Maintenance Free Accessible batteries with industry leading cold cranking amps...up to 1000 (CCA), for electric power, machine or on-highway truck and bus applications. Deep cycle models are available for truck, marine or recreational usage

Specifications for Cat Premium High Output Batteries-Available Worldwide

								BCI Overall Dimensions				Nominal Weight	
BCI Group Size	Part No.	CCA ≈	RC Mins †	Volts	Amp Hr. Capacity @ 20 Hrs.	Construction Notes	Accessiblity - Fluid Level Check Hours	Length In (mm)	Width In (mm)	Height In (mm)	Wet Lb (kg)	Dry Lb (kg)	Nominal Acid to Fill Qt (liter)
8D	153-5720	1500	465	12	210	C/MFA	A - 1000	20.5 (520)	10.8 (275)	9.8 (248)	132 (59.9)	-	-
8D	101-4000	1400	400	12	190	LAC+	A - 1000	20.8 (527)	11.0 (278)	9.8 (248)	132 (59.9)	86 (39.0)	18.0 (17.0)
4D	153-5710	1400	425	12	200	C/MFA	A - 1000	20.5 (520)	8.6 (218)	9.8 (248)	119 (54.0)	-	-
4D	9X-9730	1300	400	12	190	LAC+	A - 1000	20.8 (527)	8.6 (218)	9.8 (248)	120 (54.0)	81 (36.8)	14.8 (14.0)
4D	153-5700	1125	305	12	145	C/MFA	A - 1000	20.5 (520)	8.6 (218)	9.8 (248)	101 (45.8)	-	-
4D	9X-9720	1000	275	12	140	LAC+	A - 1000	20.8 (527)	8.6 (218)	9.8 (248)	102 (45.8)	59 (26.8)	15.9 (15.0)
31	175-4390	1000	180	12	90	C/MFA/S	A - 1000	12.9 (329)	6.8 (172)	9.3 (236)	60 (27.2)	-	-
31	175-4370	825	190	12	100	C/MFA/S**	A - 1000	12.9 (329)	6.8 (172)	9.3 (236)	61 (27.2)	-	-
31	175-4360	710	185	12	100	C/MFA/S***	A - 1000	12.9 (329)	6.8 (172)	9.3 (236)	62 (28.1)	-	-
31/30H	115-2422	1000	170	12	90	C/MFA	A - 1000	12.9 (329)	6.8 (172)	9.5 (241)	63 (28.6)	-	-
31/30H	115-2421	950	170	12	90	C/MFA+	A - 1000	12.9 (329)	6.8 (172)	9.5 (241)	64 (29.1)	44 (20.0)	6.6 (6.2)
31/30H	9X-3404(1)	950	165	12	95/100	C/MF	NA	13.0 (331)	6.8 (172)	9.5 (241)	58 (26.3)	-	-
31/30H	3T-5760	750	165	12	95/100	C/MF	AV - 1000	13.0 (331)	6.8 (172)	9.5 (241)	56 (25.4)	-	-
65	230-6368	880	140	12	70	C/MF	NA	11.9 (304)	7.5 (191)	7.5 (191)	46 (20.9)	-	-
24	153-5656	650	110	12	52	C/MF	NA	11.0 (279)	6.9 (174)	9.0 (229)	39 (17.7)	-	-

Construction Notes:
Batteries use SAE taper post design and are shipped wet except as:

- LAC = Low Maintenance - Hybrid Construction
- C = Calcium Lead Alloy Grid Design
- MF = Maintenance Free Non-Accessible
- MFA = Maintenance Free Accessible
- A = Accessible
- NA = Non-Accessible
- AV = Accessibly Varies - Accessibility varies depending on supplier used. If it has caps, it is accessible and fluid levels should be checked.
- S = Stud Terminals
- + = Shipped Dry Only
- * = Side Terminals Only
- ** = Starting and Deep Cycle Battery
- *** = Deep Cycle and Starting Battery
- ≈ = Cold Cranking Amps for 30 seconds at 0° F (-18° C)
- † = Reserve Capacity Minutes minimum of 25 amp output at 80° F (27°C)
- SDT = Dual, Top mounted Terminals - Stud and SAE Post. Marine Deep Cycle/ Starting Battery
- 1 = Available in EAME and China only

Rugged Design–Built Tough–Reliable Starting

- Positive and negative plates are anchored to container bottom and locked at the top of cell element for maximum vibration resistance.
- Heavy-duty forged terminal post bushings provide maximum strength and resistance to acid seepage.
- Hefty full-frame grids, no sharp edges, optimum acid/paste combination provides better charge acceptance after deep discharge.
- Manifold vented cover with built-in Flame Arrestor…a safety feature that directs corrosive gases away from the battery and hold-downs.
- Thick, robust container resists rugged treatment typical of heavy-duty commercial use. Embossed part number & descriptors for easy serviceability.

BCI Terminal Locations

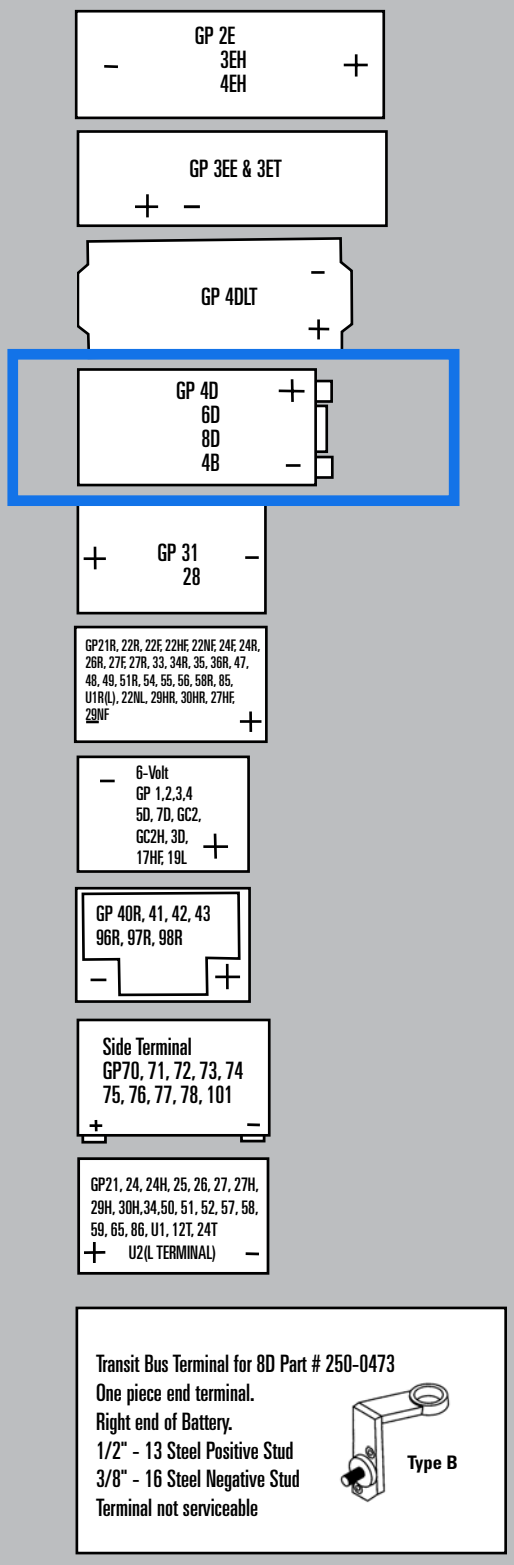

Transit Bus Terminal for 8D Part # 250-0473
One piece end terminal.
Right end of Battery.
1/2" - 13 Steel Positive Stud
3/8" - 16 Steel Negative Stud
Terminal not serviceable

Cat Premium High Output Batteries — Built Tough to Exceed Demanding Performance Test Requirements:

- **100 hour Vibration Testing – Five Times the Industry Standard**

  Battery must be able to withstand vibration forces without suffering mechanical damage, loss of capacity, loss of electrolyte or without developing internal/external leaks

  Battery must pass a high rate discharge test after the vibration testing

- **Five 72-hour Deep Discharge/Recharge Test Cycles**

  Battery must recover to 25 charging amps within 20 minutes and meet Industry Electrical Performance Standards

- **30 Day Complete Discharge Test**

  Battery must recover to 25 charging amps within 60 minutes and meet Industry Electrical Performance Standards after recharging

- **SAE J2185 Life Cycle Test**

  Battery subject to deeper discharge and charge cycles at extreme temperatures not normally encountered in starting a machine or vehicle

- **Cold Soak Test**

  Battery cold soaked at sub-freezing temperatures and then tested by starting an equally cold engine

Battery Accessories

Group 31 - Charging Posts for Stud Terminals - Part # 4C-5637
Screw-in Charging Posts for Side Terminals - Part # 4C-5638
Wing Nut - Part # 2B-9498 for Part #'s 175-4390/175-4370/175-4360/8C-3628
Wing Nut - Part # 3B-0723 for Part #'s 8C-3638 and 8C-3639
Booster Cable 12' (3.66 m) - Part # 4C-4911
Booster Cable 20' (6.00 m) - Part # 4C-4933
Heavy Duty Commercial Fast Charger (110V) - Part # 4C-4921
Heavy Duty Commercial Fast Charger (220V) - Part # 4C-4910

Note: Ratings and Part Numbers are subject to change without notice.

Recycle all scrap batteries.
We accept lead-acid batteries for recycling.

Worldwide Application Flexibility

Marine Commercial Vessels
Maintenance Free Accessible 4D, 8D and Group 31 Batteries. General Service Line Line valve regulated (VRLA) Gel batteries. High Marine Cranking Amps (MCA) and Deep Cycling capabilities.

Marine Pleasure Craft
Premium High Output BCI Group 31, Dual Terminal Deep Cycle Batteries. General Service Line BCI group 24M, 27M and 8V sizes.

Automotive-Truck-Bus & RV
A wide selection of popular BCI group sizes. Maintenance Free Accessible, Severe Service and Deep Cycle models. Application Specific Group 31 Truck Batteries.

Electric Power Generation
Premium High Output Maintenance Free Accessible and Accessible batteries in BCI group 4D, 8D, & 31 sizes. High Cold Cranking Amp (CCA) Capability. General Service Line valve regulated (VRLA) GM batteries for UPS or stationary power applications.

Commercial & Recreational
A wide selection of premium batteries in most BCI group sizes for light commercial, recreational, agricultural and industrial applications.

Construction & Mining
Premium High Output Maintenance Free Accessible batteries. BCI group 4D, 8D and 31 Sizes. Industry leading cold cranking amps (CCA) and maximum vibration resistance.

Cat® Batteries

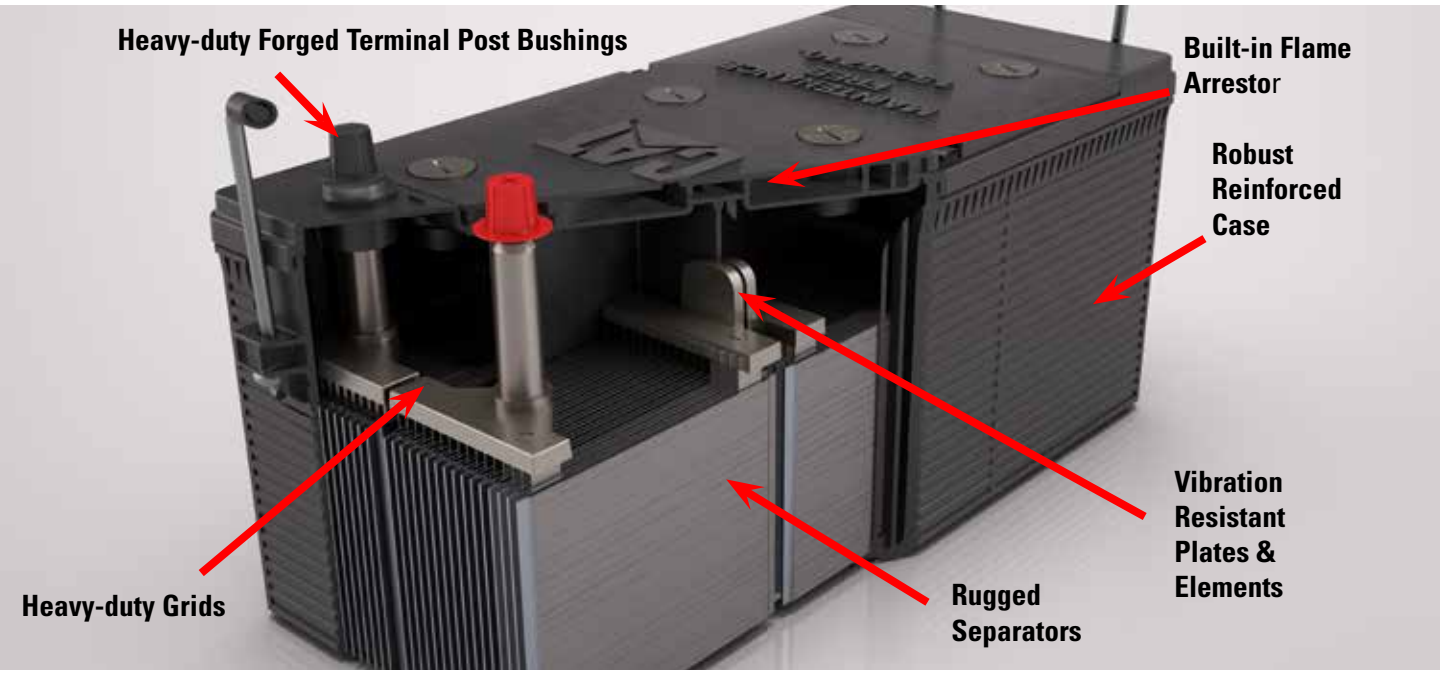

Robust Components = Long Life + Reliable Starts

- Heavy-duty forged terminal post bushings provide maximum strength and resistance to acid seepage that causes corrosion and black posts. Thicker internal terminal posts provide lower electrical resistance and higher cold cranking amp output.
- Rugged micro porous polyethylene envelope separators protect against "shorts" and vibration damage. Deep Cycle batteries utilize double insulated Glass mat separators for longer cycling life.
- Maintenance Free Accessible batteries utilize calcium lead alloy on both positive and negative plates that reduces gassing and water consumption. Automotive batteries have Silver (Ag) Calcium Alloy Grids for resistance to high underhood temperatures.
- Heavy-duty, full frame battery grids with no sharp edges. An optimum acid/paste combination provides better charge acceptance after a deep discharge.
- Positive and Negative plates are anchored to the container bottom and the cell element is locked at the top for maximum vibration resistance. Straps are thicker, heavier and cast (not welded) into the plates.
- Manifold vented cover with built-in Flame Arrestor…a safety feature that directs corrosive gases away from the battery and hold-downs.
- Robust reinforced case provides extra strength in all temperature extremes. Brickwork design on sides reduces chance of punctures and case flexing. Embossed part number and descriptors for easy serviceability.

CAT DEALERS DEFINE WORLD-CLASS PRODUCT SUPPORT.

We offer you the right parts and service solutions, when and where you need them.

The Cat Dealer network of highly trained experts keeps your entire fleet up and running to maximize your equipment investment.

PEHJ0073-03
www.cat.com

© 2014 Caterpillar • All Rights Reserved • Printed in USA
CAT, CATERPILLAR, their respective logos, "Caterpillar Yellow" and the POWER EDGE trade dress, as well as corporate and product identity used herein, are trademarks of Caterpillar and may not be used without permission.

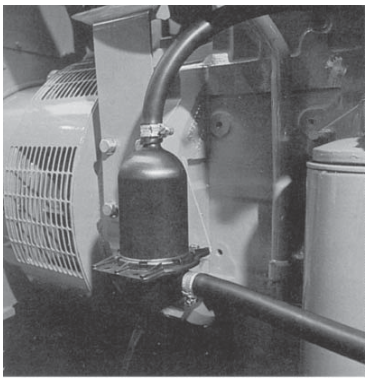

Picture shown may not represent actual package.

Coolant Heater

(WHH / WHHH / WHHA / JWH0089)

Appropriate when the generator set is to be sited in a low ambient environment, the heater maintains the engine coolant at a temperature [typically 38°C (100°F)] which facilitates rapid starting and load acceptance. The heater assembly uses UL compliant components (to UL1030) and has CSA certification which is to both CSA and UL Standards.

The heater itself is powered either by a 110/120 volt (VAC 120) for 60 Hz or 240V (VAC 240) for 50 Hz AC auxiliary supply protected by a safeguard breaker inside the main control panel. A thermostatic controller is included to regulate the output temperature to within safe limits. When the generator set is not running the heater is automatically connected to the AC supply through a power relay mounted in the control panel.

Upon receiving a start signal the AC supply is automatically disconnected by the power relay and automatically reconnected when the start signal is removed and the engine has stopped*.

Features

- Molded from Polyphenylene Sulphide
- Rust free, corrosion resistant with exceptional tensile strength
- Vibration and shock tested to extreme limits to ensure durability
- Compatible with all coolant additives
- Incoloy element for longer service life

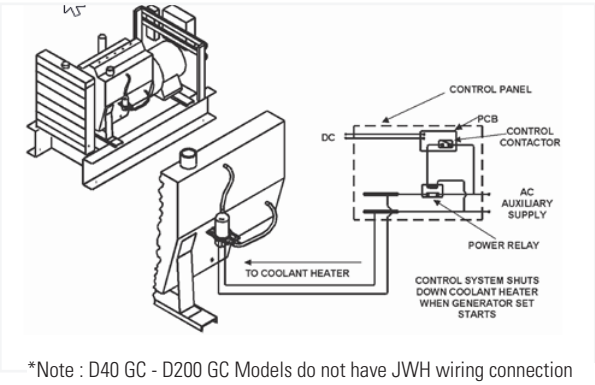

*Note : D40 GC - D200 GC Models do not have JWH wiring connection with the control panel and the JWH wiring connection is up to the customers..

VAC 120/240

Diesel Generator Set Engine Models	Nominal Coolant Heater Power Consumption (Watts)
C2.2, C4.4, C7.1	1000
C9, C13	1500
C15, C18	2500

Gas Generator Set Models	Nominal Coolant Heater Power Consumption (Watts)
DG40,DG45,DG50,DG60,DG70,DG80	1000
DG100, DG125, DG150	1800

©2024 Caterpillar. All rights reserved.
Materials and specifications are subject to change without notice. The International System of Units (SI) is used in this publication.
CAT, CATERPILLAR, LET'S DO THE WORK, their respective logos, "Caterpillar Corporate Yellow", the "Power Edge" and Cat "Modern Hex" trade dress as well as corporate and product identity used herein, are trademarks of Caterpillar and may not be used without permission.

LEHE4035-13 (12/24)

Anti-Condensation Heater

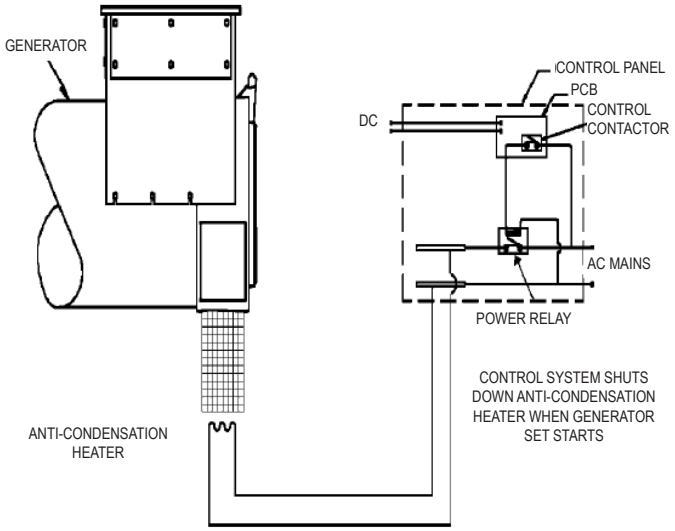

Generator Anti-condensation Heater AH1H

Appropriate when the generator set is to be sited in a low ambient and/or high humidity environment, theheater maintains the AC generator at a suitable temperature to prevent winding corrosion due to condensation.

The heater itself is powered by a 110/120 volt (VAC 120) or 208/240 volt (VAC 240) AC auxiliary supply protected by a fuse inside the main control panel. When the generator set is not running the heater is automatically connected to the AC supply through a power relay mounted in the control panel. Upon receiving a start signal the AC supply is automatically disconnected by the power relay and automatically reconnected when the start signal is removed and the engine has stopped.

Generator Frame	Nominal Heater Power Consumption (Watts)
LC15XX, M17XX, M14XX	60
LC31XX, M22XX	100
LC50XX, M27XX	250

LET'S DO THE WORK.™

www.cat.com/electricpower
©2023 Caterpillar
All rights reserved.
Materials and specifications are subject to change without notice.
The International System of Units (SI) is used in this publication.
CAT, CATERPILLAR, LET'S DO THE WORK, their respective logos, "Caterpillar Corporate Yellow" the "Power Edge" and Cat "Modern Hex" trade dress as well as corporate and product identity used herein, are trademarks of Caterpillar and may not be used without permission.

LEHE4017-03 (04/23)

Image shown may not reflect actual configuration.

20A Tamper-Resistant, Weather-Resistant GFCI Receptacles

Features and Benefits

- Automatically tests the GFCI every time the reset button is pushed in. The GFCI will not reset if the GFCI circuit is not functioning properly.
- By blocking reset of the GFCI if protection has been compromised, SmartLockPRO reduces the possibility of end-users incorrectly assuming that a reset GFCI outlet is providing ground fault protection when it actually is not.
- A line-load reversal diagnostic feature is provided which prevents the GFCI from being reset and stops power from being fed to the GFCI receptacle face or through to downstream devices. A green LED indicator on the GFCI's face also illuminates to alert the installer to the line-load wiring reversal.

Weather-Resistant GFCIs

- Meet UL 498 requirements for weather-resistant receptacles.

Tamper-Resistant GFCIs

- Shutter mechanism inside the receptacle blocks access to the contacts unless a two-prong plug is inserted, helping ensure foreign objects will be locked out.

Product Features

- Grounding: GFCI ground fault
- Feature: Weather and tamper-resistant
- Amperage: 20 Amp
- Voltage: 125 Volt
- NEMA: 5-20R
- Trip Level: Class A, 5mA plus or minus 1mA
- Pole: 2
- Wire: 3
- Color: White

Standards and Certifications

- NEMA: WD-6
- ANSI: C-73
- UL498: File E13399
- CSA C22.2 No. 42: File LR-57811
- NOM: 057
- UL 943: File E48380

Receptacles contained in a weather resistant box and in-use cover.

www.Cat-ElectricPower.com

©2016 Caterpillar
All rights reserved.

Materials and specifications are subject to change without notice. CAT, CATERPILLAR, their respective logos, "Caterpillar Yellow", the "Power Edge" trade dress as well as corporate and product identity used herein, are trademarks of Caterpillar and may not be used without permission.

Annunciators

Picture shown may not reflect actual configuration.

Remote Annunicator Moduel

It is an LED expansion module that can be used with compatible control modules. The module has been designed to display a maximum of eight individual LED indications up to a maximum distance of 1 KM (0.6 miles).

The Annunciator will consist of two modules to provide a 16 Channel Fault annunciation.

It is presented in a vertical enclosure. It includes an alarm sounder that is triggered when the host controller detects an alarm condition. The alarm can be muted using the front push button.

The Panels will be fitted with removable label cards which can be used to identify the standard NFPA alarms if desired.

It includes individual LEDs for each channel and a 'Power On' LED that flashes when the link with the host controller is lost.

Features

- The Remote annunciator has an integral Sounder/Horn
- Eight configurable LEDs (per module)
- Works up to 1 KM (0.6 miles) from the host controller
- A single controller can support five Caterpillar configured remote annunciator control boxes

ENVIRONMENTAL TESTING STANDARD

ELECTRO-MAGNETIC COMPATIBILITY

BS EN 61000-6-2
EMC Generic Immunity Standard for the Industrial Environment
BS EN 61000-6-4
EMC Generic Emission Standard for the Industrial Environment

ELECTRICAL SAFETY

BS EN 60950
Safety of Information Technology Equipment, including Electrical Business Equipment

TEMPERATURE

BS EN 60068-2-1
Ab/Ae Cold Test -30 °C BS EN 60068-2-2
Bb/Be Dry Heat +70°C

VIBRATION

BS EN 60068-2-6
Ten sweeps in each of three major axes
5 Hz to 8 Hz @ +/-7.5 mm, 8 Hz to 500 Hz @ 2 gn

SHOCK

BS EN 60068-2-27
Three shocks in each of three major axes 15 gn in 11 Ms

HUMIDITY

BS EN 60068-2-30
Db Damp Heat Cyclic 20/55 °C @ 95% RH 48 Hours
BS EN 60068-2-78
Cab Damp Heat Static 40 °C @ 93% RH 48 Hours

DEGREES OF PROTECTION PROVIDED BY ENCLOSURES BS EN 60529

IP65 – Front of module when installed into the control panel with the supplied sealing gasket.

SPECIFICATION

CONTINUOUS VOLTAGE RATING

8 V to 35 V Continuous

CRANKING DROPOUTS

Able to survive 0 V for 50 mS, providing supply was at least 10 V before dropout and supply recovers to 5 V. This is achieved without the need for internal batteries. LEDs and backlight will not be maintained during cranking.

MAXIMUM OPERATING CURRENT

112 mA at 12 V, 53 mA at 24 V

MAXIMUM STANDBY CURRENT

74 mA at 12 V, 35 mA at 24 V

DIMENSIONS OVERALL

355 mm x 369 mm x 90 mm
13.6" x 14.5" x 3.5"

PANEL CUT-OUT

286 mm x 326 mm x 93 mm
11.2" x 12.8" x 3.6"

MAXIMUM PANEL THICKNESS

8 mm
0.3"

LET'S DO THE WORK.™

www.cat.com/electricpower
©2023 Caterpillar
All rights reserved.
Materials and specifications are subject to change without notice.
The International System of Units (SI) is used in this publication. CAT, CATERPILLAR, LET'S DO THE WORK, their respective logos, "Caterpillar Corporate Yellow", the "Power Edge" and Cat "Modern Hex" trade dress as well as corporate and product identity used herein, are trademarks of Caterpillar and may not be used without permission.

LEHE2021-01 (03/23)

Input Expansion Module

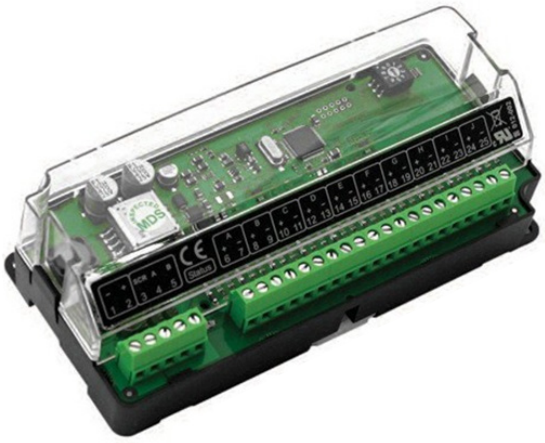

Picture shown may not reflect actual configuration.

Input Expansion Module

The Ratiometric Input Expansion module is used in conjunction with supported controllers to provide additional, flexible, input functionality. The module's ID switch is configurable from the module and the 10 inputs can be configured from within the 'host controller'.

The ratiometric inputs can be configured in a number of ways to connect to digital switches, resistive sensors, 0 – 10 V DC signals or 4 – 20 mA signals.

LED indication is provided for 'Power On' and 'Link Lost'.

Features

- Power On/Link Lost LED
- 10 inputs configurable for digital/resistive 4 – 20 mA and 0 – 10 V DC
- A maximum of 4 modules can be connected to 1 host control module to provide up to 40 additional configurable inputs
- Works up to 1.2 km (0.75 miles) from the host controller
- Terminal strip connection for quick and easy set-up

ENVIRONMENTAL TESTING STANDARD

ELECTRO-MAGNETIC COMPATIBILITY

BS EN 61000-6-2
EMC Generic Immunity Standard for the Industrial Environment
BS EN 61000-6-4
EMC Generic Emission Standard for the Industrial Environment

ELECTRICAL SAFETY

BS EN 60950
Safety of Information Technology Equipment, including Electrical Business Equipment

TEMPERATURE

BS EN 60068-2-1
Ab/Ae Cold Test -30 °C BS EN 60068-2-2
Bb/Be Dry Heat +70°C

VIBRATION

BS EN 60068-2-6
Ten sweeps in each of three major axes
5 Hz to 8 Hz @ +/-7.5 mm, 8 Hz to 500 Hz @ 2 gn

SHOCK

BS EN 60068-2-27
Three shocks in each of three major axes 15 gn in 11 Ms

HUMIDITY

BS EN 60068-2-30
Db Damp Heat Cyclic 20/55°C @ 95% RH 48 Hours
BS EN 60068-2-78
Cab Damp Heat Static 40°C @ 93% RH 48 Hours

DEGREES OF PROTECTION PROVIDED BY ENCLOSURES BS EN 60529

IP21

SPECIFICATION

CONTINUOUS VOLTAGE RATING

8 V to 35 V Continuous

CRANKING DROPOUTS

Able to survive 0 V for 50 mS, providing supply was at least 10 V before dropout and supply recovers to 5 V. This is achieved without the need for internal batteries. LEDs light will not be maintained during cranking.

MAXIMUM OPERATING CURRENT

292 mA at 12 V, 167 mA at 24 V mA at 24 V

MAXIMUM STANDBY CURRENT

101 mA at 12 V, 167 mA at 24 V

INPUTS

10 inputs configurable for digital/resistive (3k ohms) 4 – 20 mA and 0 – 10 V DC

DIMENSIONS OVERALL

165 mm x 76 mm x 49 mm

STROAGE TEMPERATURE RANGE

-40ºC to + 85ºC

LET'S DO THE WORK.™

www.cat.com/electricpower

©2023 Caterpillar
All rights reserved.
Materials and specifications are subject to change without notice.
The International System of Units (SI) is used in this publication. CAT, CATERPILLAR, LET'S DO THE WORK, their respective logos, "Caterpillar Corporate Yellow", the "Power Edge" and Cat "Modern Hex" trade dress as well as corporate and product identity used herein, are trademarks of Caterpillar and may not be used without permission.

LEHE2019-01 (03/23)

Output Expansion Module

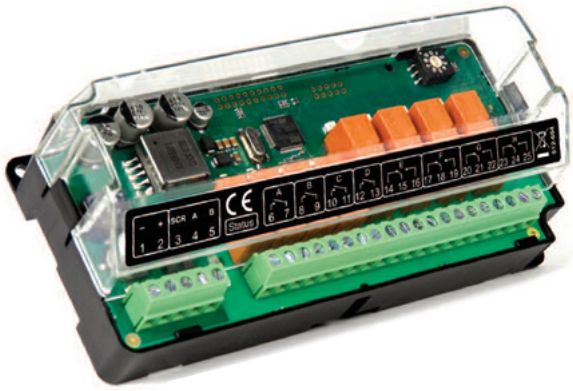

Picture shown may not reflect actual configuration.

Output Expansion Module

Output relay expansion module for use with compatible control modules. The Output Expansion module has been designed to extend a host module's output capabilities.

A maximum of 10 Output Expansion modules can be connected to an individual module at any one time. All outputs are configurable via the host controller.

The module will work up to 1 KM (0.6miles) from the host control module.

Features

- Power On/Link Lost LED ID SWITCH
- 10 expansion modules can be connected to 1 host controller at a time
- 8 configurable relay contacts with LED indicators
- 4 Normally Open (N/O)
- 4 Change Over (C/O)
- Terminal strip connection for quick and easy set-up

ENVIRONMENTAL TESTING STANDARD

ELECTRO-MAGNETIC COMPATIBILITY

BS EN 61000-6-2
EMC Generic Immunity Standard for the Industrial Environment
BS EN 61000-6-4
EMC Generic Emission Standard for the Industrial Environment

ELECTRICAL SAFETY

BS EN 60950
Safety of Information Technology Equipment, including Electrical Business Equipment

TEMPERATURE

BS EN 60068-2-1
Ab/Ae Cold Test -30 °C BS EN 60068-2-2
Bb/Be Dry Heat +70°C

VIBRATION

BS EN 60068-2-6
Ten sweeps in each of three major axes
5 Hz to 8 Hz @ +/-7.5 mm, 8 Hz to 500 Hz @ 2 gn

SHOCK

BS EN 60068-2-27
Three shocks in each of three major axes 15 gn in 11 Ms

HUMIDITY

BS EN 60068-2-30
Db Damp Heat Cyclic 20/55 °C @ 95% RH 48 Hours BS EN 60068-2-78
Cab Damp Heat Static 40 °C @ 93% RH 48 Hours

SPECIFICATION

CONTINUOUS VOLTAGE RATING

8 V to 35 V Continuous

CRANKING DROPOUTS

Able to survive 0 V for 50 mS, providing supply was at least 10 V before dropout and supply recovers to 5 V. This is achieved without the need for internal batteries. LEDs and backlight will not be maintained during cranking.

MAXIMUM OPERATING CURRENT

325 mA at 12 V, 152 mA at 24 V

MAXIMUM STANDBY CURRENT

70 mA at 12 V, 32 mA at 24 V

AUXILIARY RELAY CONTACTS

2 Amp DC rated voltage free

DIMENSIONS OVERALL

165 mm x 76 mm x 49 mm
6.5" x 3" x 1.9"

LET'S DO THE WORK.™

LEHE2020-01 (03/23)

www.cat.com/electricpower
©2023 Caterpillar
All rights reserved.
Materials and specifications are subject to change without notice.
The International System of Units (SI) is used in this publication. CAT, CATERPILLAR, LET'S DO THE WORK, their respective logos, "Caterpillar Corporate Yellow", the "Power Edge" and Cat "Modern Hex" trade dress as well as corporate and product identity used herein, are trademarks of Caterpillar and may not be used without permission.

BELDEN

Product: 9841

RS485, 1 Pr #24 Str TC, PE Ins, OS+TC Brd, PVC Jkt, CM

Request Sample

Product Description

RS-485, 1 Pair 24AWG (7x32) Tinned Copper, PE Insulation, Overall Beldfoil®+Tinned Copper Braid(90%) Shield, PVC Outer Jacket, CM

Technical Specifications

Product Overview

Suitable Applications:	RS-485, POS; Computer communications; Low Voltage Analog Signals (4-20ma, 0-10v, ...); Low Voltage Digital Control (24v, …); Line Level Audio; Panel Wiring; serial communication (RS-485 standard) comprising of PLCs, VFDs, HMIs, motors, RTU, SCADA, etc. within noisy environments over long distance, etc.

Construction Details

Conductor

Element	No. of Elements	Size	Stranding	Material
Pair(s)	1	24 AWG	7x32	TC - Tinned Copper

Insulation

Element	Material	Nom. Thickness	Nom. Insulation Diameter	Color Code
Pair(s)	PE - Polyethylene	0.023 in (0.58 mm)	0.068 in (1.7 mm)	White/Blue Stripe & Blue/White Stripe

Outer Shield

Shield Type	Material	Coverage	Drainwire Type
Tape	Bi-Laminate (Alum+Poly)	100%	24 AWG (7x32) TC
Braid	Tinned Copper (TC)	90%	

Outer Jacket

Material	Nom. Thickness	Nom. Diameter
PVC - Polyvinyl Chloride	0.035 in (0.89 mm)	0.232 in (5.89 mm)

Table Notes:	Jacket OD +/- 0.020
Overall Cable Diameter (Nominal):	0.232 in (5.89 mm)

Electrical Characteristics

Electricals

Element	Nom. Conductor DCR	Nom. Capacitance Cond-to-Cond	Nom. Capacitance Cond-to-Other (Conds + Shield)	Nom. Characteristic Impedence	Nom. Velocity of Prop.	Max. Current
Pair(s)	24 Ohm/1000ft	12.8 pF/ft (42.0 pF/m)	23 pF/ft	120 Ohm	66%	2.1 Amps per Conductor at 25ºC (10°C Temperature Rise)

Nom. Outer Shield DCR:	3.4 Ohm/1000ft (11 Ohm/km)

High Frequency (Nominal/Typical)

Element	Frequency [MHz]	Nom. Insertion Loss (Attenuation)
Pair(s)	1	0.6 dB/100ft

Voltage

UL Voltage Rating
300 V (CM), 30 V (UL AWM 2919)

Mechanical Characteristics

Temperature

UL Temperature	Operating
80°C	-30°C to +80°C

Bend Radius

Stationary Min.	Installation Min.
2.5 in (64 mm)	2.5 in (64 mm)

Max. Pull Tension:	72.3 lbs (32.8 kg)
Bulk Cable Weight:	36 lbs/1000ft

Standards and Compliance

Environmental Suitability:	Indoor
Flammability / Reaction to Fire:	UL 1685 UL Loading, IEC 60332-1-2
CPR Compliance:	CPR Euroclass: Eca; CPR UKCA Class: Eca
NEC / UL Compliance:	Article 800, CM
AWM Compliance:	AWM 2919
CEC / C(UL) Compliance:	CM
European Directive Compliance:	EU CE Mark, EU Directive 2015/863/EU (RoHS 2 amendment), EU Directive 2011/65/EU (RoHS 2), EU Directive 2012/19/EU (WEEE)
UK Regulation Compliance:	UKCA Mark
APAC Compliance:	China RoHS II (GB/T 26572-2011)
Other Standard Compliance(s):	DMX-512
Plenum Number:	82841, 89841
Non-Plenum Number:	9841ZH

History

Update and Revision:	Revision Number: 0.558 Revision Date: 02-15-2024

Part Numbers

Variants

Item #	Color	Putup Type	Length	UPC/EAN	Footnote
9841.0030	Chrome	Reel	30 m	8719605022745	
9841 060100	Chrome	Reel	100 ft	612825259442	
9841.019999	Chrome	Reel	151 m	8719605022806	
9841.01152	Chrome	Reel	152 m	8719605022769	
9841.01305	Chrome	Reel	305 m	8719605022790	
9841 060500	Chrome	Reel	500 ft	612825259473	C
9841 0601000	Chrome	Reel	1,000 ft	612825259459	C
9841.011000	Chrome	Reel	1,000 m	8719605022752	
9841.011525	Chrome	Reel	1,525 m	8719605022776	
9841.012000	Chrome	Reel	2,000 m	8719605022783	
9841 0605000	Chrome	Reel	5,000 ft	612825259480	
9841 06010000	Chrome	Reel	10,000 ft	612825259466	C
9841.03305	Violet	Reel	305 m	8719605022837	
9841.031000	Violet	Reel	1,000 m	8719605022820	
9841.02305	Yellow	Reel	305 m	8719605022813	

© 2024 Belden, Inc

All Rights Reserved.

Although Belden makes every reasonable effort to ensure their accuracy at the time of this publication, information and specifications described here in are subject to error or omission and to change without notice, and the listing of such information and specifications does not ensure product availability.

Belden provides the information and specifications herein on an "ASIS" basis, with no representations or warranties, whether express, statutory or implied. In no event will Belden be liable for any damages (including consequential, indirect, incidental, special, punitive, or exemplary damages) whatsoever, even if Belden has been advised of the possibility of such damages, whether in an action under contract, negligence or any other theory, arising out of or in connection with the use, or inability to use, the information or specifications described herein.

All sales of Belden products are subject to Belden's standard terms and conditions of sale.

Belden believes this product to be in compliance with all applicable environmental programs as listed in the data sheet. The information provided is correct to the best of Belden's knowledge, information and belief at the date of its publication. This information is designed only as a general guide for the safe handling, storage, and any other operation of the product itself or the one that it becomes a part of. The Product Disclosure is not to be considered a warranty or quality specification. Regulatory information is for guidance purposes only. Product users are responsible for determining the applicability of legislation and regulations based on their individual usage of the product.

3.2.2 ANALOGUE SENSOR INPUTS, MPU & ECU

NOTE: For further details of module configuration, refer to DSE Publication: 057-288 *DSE6310 & DSE6320 Configuration Suite PC Software Manual.*

NOTE: It is VERY important that terminal 15 (sensor common) is connected to an earth point on the ENGINE BLOCK, not within the control panel, and must be a sound electrical connection to the sensor bodies. This connection MUST NOT be used to provide an earth connection for other terminals or devices. The simplest way to achieve this is to run a SEPARATE earth connection from the system earth star point, to terminal 15 directly, and not use this earth for other connections.

NOTE: If PTFE insulating tape is used on the sensor thread when using earth return sensors, ensure not to insulate the entire thread, as this prevents the sensor body from being earthed via the engine block.

NOTE: Screened 120 Ω impedance cable specified for use with CAN must be used for the CAN ECU links.
DSE stock and supply Belden cable 9841 which is a high quality 120 Ω impedance cable suitable for CAN use (DSE part number 016-030)

NOTE: For further details on connection to electronic engines, refer to DSE Publication: *057-004 Electronic Engines And DSE Wiring*

	Pin No	Description	Cable Size	Notes
	15	Sensor Common Return	0.5 mm² AWG 20	Ground Return Feed For Sensors
	16	Analogue Sensor Input A	0.5 mm² AWG 20	Connect To Oil Pressure Sensor
	17	Analogue Sensor Input B	0.5mm² AWG 20	Connect To Coolant Temperature Sensor
	18	Analogue Sensor Input C	0.5 mm² AWG 20	Connect To Fuel Level Sensor
	19	Analogue Sensor Input D	0.5 mm² AWG 20	Connect To Additional Sensor (User Configurable)
	20	Magnetic Pickup Positive	0.5 mm² AWG 20	Connect To Magnetic Pickup Device
	21	Magnetic Pickup Negative	0.5 mm² AWG 20	Connect To Magnetic Pickup Device
	22	Magnetic Pickup Screen	Shield	Connect To Ground At One End Only
ECU	23	CAN Port H	0.5 mm² AWG 20	Use only 120 Ω CAN or RS485 approved cable
	24	CAN Port L	0.5 mm² AWG 20	Use only 120 Ω CAN or RS485 approved cable
	25	CAN Port Screen	Shield	Use only 120 Ω CAN or RS485 approved cable

3.2.3 DSE NET

NOTE: As a termination resistor is internally fitted to the controller, the controller must be the 'first' unit on the DSENet® link. A termination resistor MUST be fitted to the 'last' unit on the DSENet® link. For connection details, refer to section entitled *Typical Wiring Diagram* elsewhere in this document.

	Pin No	Description	Cable Size	Notes
↑↓	26	DSENet® Expansion B	0.5 mm² AWG 20	Use only 120 Ω CAN or RS485 approved cable
	37	DSENet® Expansion A	0.5 mm² AWG 20	Use only 120 Ω CAN or RS485 approved cable
	28	DSENet® Expansion Screen	Shield	Use only 120 Ω CAN or RS485 approved cable

3.2.4 V1 (GENERATOR) & V2 (MAINS) VOLTAGE & FREQUENCY SENSING

NOTE: The below table describes connections to a three phase, four wire alternator. For alternative wiring topologies, see the section entitled *Alternate Topology Wiring Diagrams* elsewhere in this document.

NOTE: Terminals 33 to 36 (V2) not fitted to DSE6310

	Pin No	Description	Cable Size	Notes
V1	29	Generator L1 (U) Voltage Sensing	1.0 mm² AWG 18	Connect to generator L1 (U) output (AC) (Recommend 2 A fuse)
	30	Generator L2 (V) Voltage Sensing	1.0 mm² AWG 18	Connect to generator L2 (V) output (AC) (Recommend 2 A fuse)
	31	Generator L3 (W) Voltage Sensing	1.0 mm² AWG 18	Connect to generator L3 (W) output (AC) (Recommend 2 A fuse)
	32	Generator Neutral (N) Input	1.0 mm² AWG 18	Connect to generator Neutral terminal (AC)
V2	33	Bus L1 (R) Voltage Sensing	1.0 mm² AWG 18	Connect to Bus L1 (R) output (AC) (Recommend 2 A fuse)
	34	Bus L2 (S) Voltage Sensing	1.0 mm² AWG 18	Connect to Bus L2 (S) output (AC) (Recommend 2 A fuse)
	35	Bus L3 (T) Voltage Sensing	1.0 mm² AWG 18	Connect to Bus L3 (T) output (AC) (Recommend 2 A fuse)
	36	Bus Neutral (N) Input	1.0 mm² AWG 18	Connect to Bus Neutral terminal (AC)

AIR CLEANERS

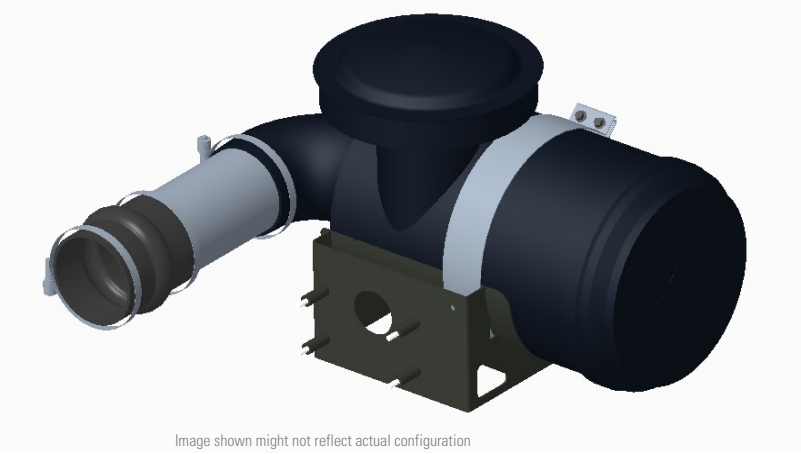

Image shown might not reflect actual configuration

AIR CLEANERS FOR

D40 GC – D200 GC ENGINES

GENERAL DESCRIPTION

Air Cleaner reduce contaminants flowing into the air intake system, provide a high level of Engine protection from harmful contaminants and increase engine performance and fuel efficiency.

Dual element air cleaners provide additional protection for the Engine

FEATURES

- Radial Seal Technology
- Easy to read CAT filter service indicator with manual reset#
- Standard Yellow Media
- Constant torque clamps
- Engine rear mounted filters with easy access to service filter to open and enclosed Gensets
- Air filters Designed for 250 hrs of service*

service indicator is available only with Canister element
*based on dust Concentration levels

Feature Code	Engine model	Dust Environment	Industry	Element	Housing
Dust Concentration level - 1mg/m3					
STD AIR	D40 GC – D60 GC	Standard Duty	Factory, Office	Canister	N-A
STD AIR	D80 GC – D200 GC	Standard Duty	Factory, Office	Non-Canister	N-A

©2020 Caterpillar All rights reserved. Materials and specifications are subject to change without notice. The International System of Units (SI) is used in this publication. CAT, CATERPILLAR, their respective logos, "Caterpillar Corporate Yellow", the "Power Edge" and Cat "Modern Hex" trade dress as well as corporate and product identity used herein, are trademarks of Caterpillar and may not be used without permission.

PowerTank

Double-Wall Secondary Containment Sub-Base Tanks

phoenixproducts

DOUBLE-WALL GENERATOR SUB-BASE FUEL TANKS

Steel aboveground sub-base tanks for flammable and combustible liquids

- UL 142 listed and labled – inner and outer tanks are completely enclosed and pressure tested
- Meets requirements for secondary containment, leak monitoring, spill containment, and overfill protection
- No external cross beams or side supports to interfere with generator placement or stairs and walkways
- Supports generator sets up to 80,000 pounds, with or without enclosures
- Primary and emergency vents standard
- Rounded corners allowing proper adherence of industrial grade enamel coating
- Steel support channel allow visual tank bottom inspection and air circulation

Designed to meet or exceed national, state and local codes

- NFPA 30, 30A, 37 & 110
- True double-wall construction for UL Certification
- Exceeds liability insurance requirements
- Engineered for seismic rating
- Earthquake and hurricane tie downs
- Leak detection space provided

phoenixproducts™
1727 Bennett Street, Jacksonville, FL 32206 • 904-354-1858 • 904-354-7929 Fax
phoenix.sales@phoenixprods.com • www.phoenixprods.com

Options

- Stairs and platforms (aluminum/galvanized steel) meeting OSHA standards with handrails
- Cold weather heaters
- Stainless steel inner and outer tanks
- Custom color matching
- Over-fill spill protection
- Fuel polishing systems
- Dispensing equipment
- Fuel monitoring and control systems
- Daytanks with supply and return pumps
- Tank top guard rails approved by OSHA

phoenixproducts™
1727 Bennett Street, Jacksonville, FL 32206 • 904-354-1858 • 904-354-7929 Fax
phoenix.sales@phoenixprods.com • www.phoenixprods.com

Model 245 Emergency Vents

SPECIFICATION SHEET

Application

This lightweight, spring-loaded emergency vent (pressure relief only) is used on aboveground storage tanks, as a code requirement, to help prevent the tank from becoming over-pressurized and possibly rupturing if ever exposed to fire. This vent must be used in conjunction with a "normal vent." Correct application of this vent requires proper vent size and selection for the tank system in order to meet the specific venting capacity.

4" vent (245M)

4" vent (245F)

6" vent (245)

Materials of Construction

- Body... Aluminum
- Cover... Aluminum
- Seat... FKM
- Bolt... Zinc plated steel

Code Compliance

When properly sized for the tank, this vent will conform to the requirements of the International Fire Code; National Fire Code of Canada; National Fire Protection Agency—NFPA 30, 30A, 31, 37, 110; Petroleum Equipment Institute—PEI RP200, PEI RP800; Underwriters Laboratories Inc.—UL-142, UL-2085, UL-2244; Underwriters Laboratories of Canada—CAN/ULC S601, CAN/ULC S602, CAN/ULC S652

Approvals

Underwriters Laboratories Inc. UL-2583

c UL US LISTED UL 2583

NOTE

Emergency vent should be set higher than the normal vent so the normal vent operates first.

WARNING: DO NOT FILL OR UNLOAD FUEL FROM A STORAGE TANK UNLESS IT IS CERTAIN THAT THE TANK VENTS WILL OPERATE PROPERLY. Morrison tank vents are designed only for use on shop fabricated atmospheric tanks which have been built and tested in accordance with UL 142, NFPA 30 & 30A, and API 650 and in accordance with all applicable local, state and federal laws. In normal operation, dust and debris can accumulate in vent openings and block air passages. Certain atmospheric conditions such as a sudden drop in temperature, below freezing temperatures, and freezing rain can cause moisture to enter the vent and freeze which can restrict internal movement of vent mechanisms and block air passages. All storage tank vent air passages must be completely free of restriction and all vent mechanisms must have free movement in order to insure proper operation. Any restriction of airflow can cause excessive pressure or vacuum to build up in the storage tank, which can result in structural damage to the tank, fuel spillage, property damage, fire, injury, and death. Monthly inspection, and immediate inspection during freezing conditions, by someone familiar with the proper operation of storage tank vents, is required to insure venting devices are functioning properly before filling or unloading a tank. Normal vents such as pressure vacuum and updraft vents for aboveground storage tanks should be sized according to NFPA 30 (2008) 21.4.3

245 part numbers and diagrams on next page...

Model 245 Emergency Vents *(continued)*

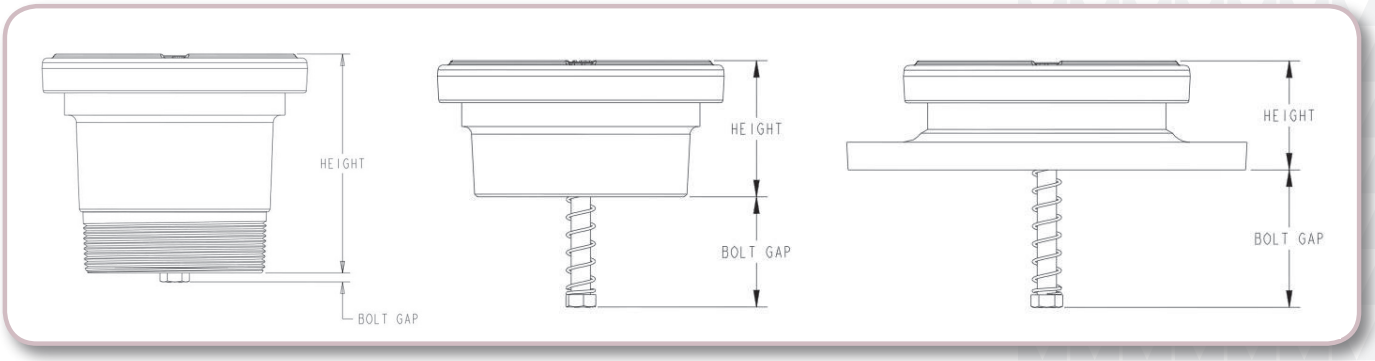

Item Number	A	B	C	D	Overall Diameter	Height	Bolt Gap	Weight	Screen
245M--0200 AV	2”	31,917	M	8	3.00	1.50	1.60	0.50	
245MS-0200 AV	2”	24,069	M	8	3.00	1.50	1.60	0.50	S
245---0300 AV	3”	67,162		8	5.00	2.80	0.90	2.80	
245S--0300 AV	3”	56,241		8	5.00	2.80	0.90	2.80	S
245M--0300 AV	3”	67,162	M	8	5.00	3.60	< ¼”	2.50	
245MS-0300 AV	3”	56,241	M	8	5.00	3.60	< ¼”	2.50	S
245---0400 AV	4”	129,369		8	6.50	3.10	2.50	3.30	
245S--0400 AV	4”	115,086		8	6.50	3.10	2.50	3.30	S
245M--0400 AV	4”	129,369	M	8	6.00	5.40	< ¼”	4.50	
245MS-0400 AV	4”	115,086	M	8	6.50	5.40	< ¼”	4.50	S
245F--0400 AV †	4”	129,369	F	8	9.10	2.50	3.00	6.00	
245FS-0400 AV	4”	115,086	F	8	9.10	2.50	3.00	6.00	S
245---0600 AV	6”	331,750		8	8.50	3.40	2.60	5.50	
245S--0600 AV	6”	277,011		8	8.50	3.40	2.60	5.50	S
245M--0600 AV	6”	331,750	M	8	8.50	5.40	0.20	6.20	
245MS-0600 AV	6”	277,011	M	8	8.50	5.40	0.20	6.20	S
245F--0600 AV †	6”	331,750	F	8	11.00	2.90	3.20	9.10	
245FS-0600 AV	6”	277,011	F	8	11.00	2.90	3.20	9.10	S
245--0800 AV	8”	527,441		8	10.50	4.50	1.50	9.20	
245M--0800 AV	8”	527,441	M	8	10.50	5.70	0.40	10.10	
245F--0800 AV †	8”	527,441	F	8	13.50	3.30	2.90	14.50	
245F--1000 AV †	10”	972,110	F	8	16.00	2.80	6.00	20.00	

*Refer to Price List for BSP options.
† Indicates model is available in a kit.

SPECIFICATION OPTIONS:

A—Size (inches)
B—Venting capacity/SCFH
C—Mounting connection: Male N.P.T. (M), Female N.P.T. (BLANK), Flanged (F)
D—Pressure settings: 8oz/in^2 (pressure required to open vent)
Diameter—Dimension across vent (inches)
Height—Dimension from base to top when closed (inches)
Bolt Gap—Dimension from base to bottom of bolt
Weight—Shipping weight (lbs)
Screen (3 mesh stainless steel)—Yes (S), No (blank)

Size	Item Number	Flanged Kits	Bolt Size
4"	245F--0408 AK	Includes 245F--0400 AV vent, flange adaptor, gasket, and (8) nuts/bolts	0.625” dia; 2” length
6"	245F--0608 AK	Includes 245F--0600 AV vent, flange adaptor, gasket, and (8) nuts/bolts	0.75” dia; 2.75” length
8"	245F--0808 AK	Includes 245F--0800 AV vent, flange adaptor, gasket, and (8) nuts/bolts	0.75” dia; 2.75” length
10"	245F--1008 AK	Includes 245F--1000 AV vent, flange adaptor, gasket, and (12) nuts/bolts	0.875” dia; 3” length

245F--0408 AV

MORRISON BROS. CO.
570 E. 7th Street, P.O. Box 238 | Dubuque, IA 52004-0238
t. 563.583.5701 | 800.553.4840 | f. 563.583.5028
www.morbros.com

Model 354 Updraft Vent

SPECIFICATION SHEET

Application

Atmospheric updraft vents are installed on the top of storage tank vent pipes on underground and aboveground fuel storage tanks.

Features and Details

- Directs vapors outward and upward in accordance with NFPA 30
- Protects the vent line from debris and insects
- Water-resistant rain cap sheds water away from the vent line
- Slip-on design with set screws for easy installation
- Internal drain channels water penetration out through weep hole
- **354T** is compatible with DEF

354 (2″)

354T (2″)

Materials of Construction

354

- Body and cap... aluminum die cast
- Screen... 40 mesh stainless steel

354T

- Body and cap... Teflon® coated black aluminum
- Screen... 40 mesh stainless steel

Certifications and Listings

- CARB 89-12 (1½″ and 2″ 354 models)

Item Number	Size (slip-on)	Weight (lbs)	Venting Capacity (SCFH) (@ 2.5 PSI)
354---0100 AV	1½″	0.75	27,650
354---0200 AV	2″	0.75	27,650
354---0300 AV	3″	1.50	59,000
354---0400 AV	4″	2.25	116,900
354T--0200 AV	2″	0.75	27,650
354T--0300 AV	3″	1.50	59,000

NOTE

Open vents will allow unrestricted evaporation of product.

WARNING: DO NOT FILL OR UNLOAD FUEL FROM A STORAGE TANK UNLESS IT IS CERTAIN THAT THE TANK VENTS WILL OPERATE PROPERLY. Morrison tank vents are designed only for use on shop fabricated atmospheric tanks which have been built and tested in accordance with UL 142, NFPA 30 & 30A, and API 650 and in accordance with all applicable local, state and federal laws. In normal operation, dust and debris can accumulate in vent openings and block air passages. Certain atmospheric conditions such as a sudden drop in temperature, below freezing temperatures, and freezing rain can cause moisture to enter the vent and freeze which can restrict internal movement of vent mechanisms and block air passages. All storage tank vent air passages must be completely free of restriction and all vent mechanisms must have free movement in order to insure proper operation. Any restriction of airflow can cause excessive pressure or vacuum to build up in the storage tank, which can result in structural damage to the tank, fuel spillage, property damage, fire, injury, and death. Monthly inspection, and immediate inspection during freezing conditions, by someone familiar with the proper operation of storage tank vents, is required to insure venting devices are functioning properly before filling or unloading a tank. Normal vents such as pressure vacuum and updraft vents for aboveground storage tanks should be sized according to NFPA 30 (2008) 21.4.3

MORRISON BROS. CO.

570 E. 7th Street, P.O. Box 238 | Dubuque, IA 52004-0238
t. 563.583.5701 | 800.553.4840 | f. 563.583.5028
www.morbros.com

ROCHESTER GAUGES, INC.

Magnetic Liquid-Level Gauges

6500 Series

Magnetic Liquid-Level Guages

Application

The 6500 Series Senior™ gauges are designed for use in low pressure tanks 0-25 psig [0-1,7Bar] containing diesel fuel, gasoline, fuel oil and lubricating oils.

Used in many applications such as construction equipment, stationary generators, boats, farm equipment and home heating.

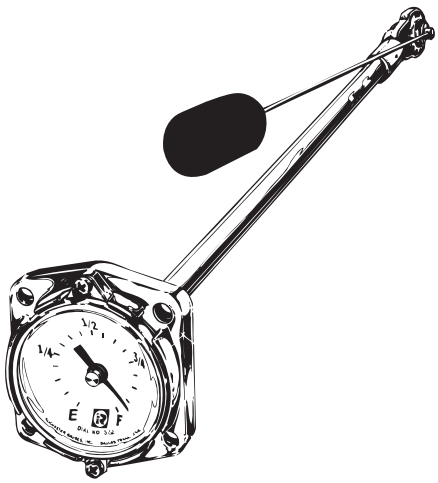

General Information & Features

The 6500 Series Senior™ gauges are available in gear-action models for top, centerline or angle mounting. In lever-action models centerline mounting is only available.

The standard float is nitrile rubber. Aluminum or stainless steel floats are available at extra cost. The gauge is mounted to a mating Senior™ flange 2 ½" bolt circle [63,5mm] using four ¼"-28 x 9/16" long screws. The gasket is Buna-N.

Model #	Action	Mounting	Dial, Sender or Switch Data
6540	Gear	Top	Senior™ TwinSite™ sender in choice of 0-30, 0-90, 240-30 ohm ranges. #5002S00062 direct-reading dial may also be used.
6543		C/L or Angle	
L6543	Lever	C/L	
6550	Gear	Top	Standard switch #5023S00778, S.P.S.T., 150 VAC/50 VDC 1/2 Amp. Please furnish tank drawings and switch points so proper gauge and calibration can be supplied. Other switches available, see DS-364.
6553		C/L or Angle	
L6553	Lever	C/L	
6560	Gear	Top	#5025S00570 Senior™ side-reading fractional.
6580			#5002S00062 Senior™ direct-reading fractional.
6583		C/L or Angle	
L6583	Lever	C/L	#5002S00547 Senior™ direct-reading fractional.
6583-00093	Gear		#5002S00062 Senior™ direct-reading fractional.

Top Mounting Adjustable Liquid-Level Gauges

Model #	Mounting	Dial or Sending Data
6580-00151	Top	• #5002S01379 Senior direct reading fractional dial • #P5880S02547 Senior TwinSite™ dial 0-90 ohms • #P5648S02547 Senior TwinSite™ dial 240-30 ohms

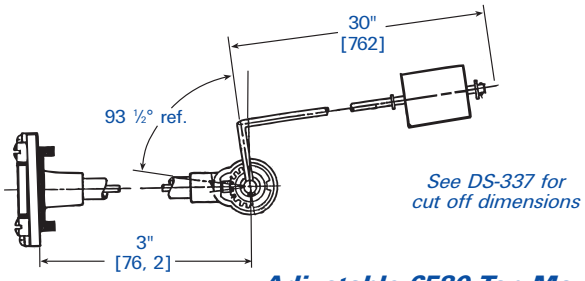

See DS-337 for cut off dimensions

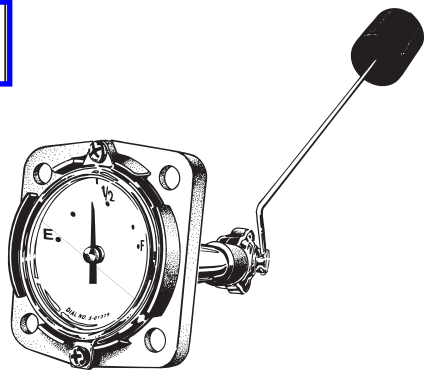

Adjustable 6580 Top Mount Gauge

06/01/00

See reverse side for dimensional data, materials of construction, performance, and advice on how to order.

The Measure of Excellence

6500 Series Magnetic Liquid-Level Gauges

Sr. Twinsite Sender

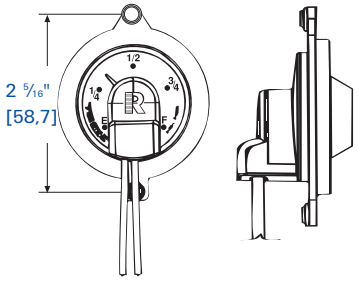

5025S00570 Sr. Side-Reading Dial

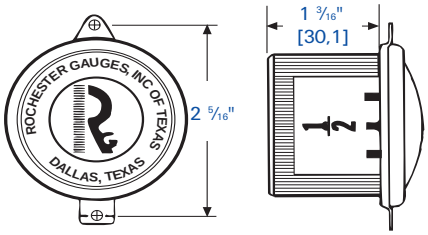

5002S00062 Sr. Direct-Reading Dial

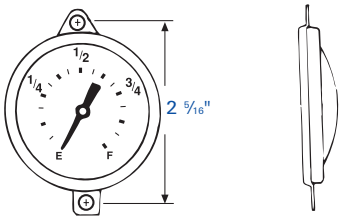

5013S00456 Standard 4" Dial

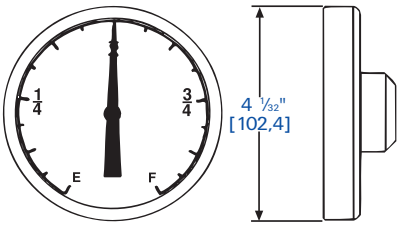

Note: This dial is used in conjunction with 93-2 mounting bracket and 39-2 bezel.

[METRIC]

Lever Action Gauge

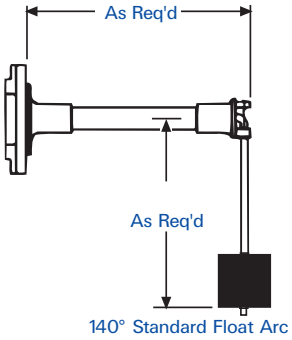

Gear Action Gauge

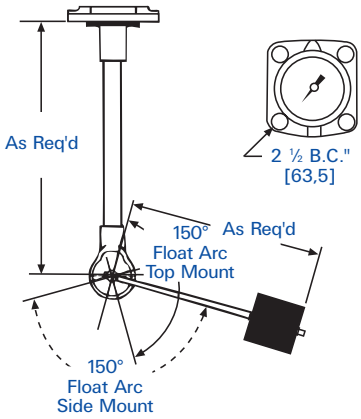

General Specifications*

Accuracy
Accuracy depends on proper sizing of gauge and tank configuration. Normally, direct-reading dials are ±3%; TwinSite™ senders are ±7%. Vibration improves accuracy.

Temperature Range
-40F to +158°F, -40 to 70C

Humidity
Paint exposed portions of gauge, less dial, for marine applications.

Shock & Vibration
Suitable for mobile applications.

Current
200 mA maximum or 0.5 watts, whichever is less on TwinSite™ versions.

System Voltage
24 volts maximum nominal system voltage on TwinSite™ versions.

Tank Pressure
Up to 50 psig [3,4Bar]

Approvals
These direct indicating gauges are UL listed for flammable liquids. Some models UL recognized for marine service.

* Specifications are subject to change without notice. Pressure ratings are subject to change due to temperature and other environmental factors.

Materials of Construction

Head
Die cast aluminum

Centershaft, Support Tube & Float Rod
Tempered aluminum

Gears, Cross Stud & Bearings
Stainless steel

Drive magnet
Alnico

Gear Housing
Acetal plastic

Float
Nitrile rubber

Gasket
Buna–N, 0015-00004 or 0015-00079

Direct Reading Dial
Aluminum with acrylic crystal, hermetically sealed.

Side Reading Dial
Aluminum with polycarbonate crystal, hermetically sealed.

TwinSite™ Sender
Nylon, hermetically sealed.

Screws
Zinc-plated steel ¼"-28 x 9/16" long.

When ordering, specify:

1. Gauge model number.
2. Tank diameter and riser height.
3. Mounting location.
4. Ohm range on TwinSite™ versions.
5. Preferred switch on switch gauges, if other than standard.
6. Any listed options or preferences.

11616 Harry Hines Blvd. • P.O. Box 29242 • Dallas, TX 75229 • (972) 241-2161 • *FAX* (972) 620-1403
Website http://www.rochestergauges.com • *E-mail* info@rochestergauges.com

Model 518 Series 7½ Gallon AST Spill Container

SPECIFICATION SHEET

Application

Tank top spill containers are designed to contain small spills that occur at the fill point on aboveground storage tanks.

Features and Details

- 7½ gallon (28.39 liters) capacity
- Hinged cover lockable with a padlock
- Space saving offset design
- **518** has female threaded offset connection
- **518CC** has female threaded centered connection
- **518M** has male threaded offset connection

Materials of Construction

- Body... 12 gauge spun steel, powder coated white
- Cover... 14 gauge steel, powder coated white
- Drain valve... brass
- Drain o-ring... Viton®

Code Compliance

- Florida DEP EQ 345, meets the new and revised requirements for CAN-ULC-S663-11 (effective September 25, 2015)

Item Number	A	B	C	D	E	F	G	H	I	J
518---0100 AC	7½	F	O	4″	Y	N	15⅞″	19 19/64″	26.0	15 3/32″
518CC-0100 AC	7½	F	C	4″	Y	N	15⅞″	19 19/64″	26.0	15 3/32″
518M--0100 AC	7½	M	O	4″	Y	N	17 13/64″	19 19/64″	26.0	15 3/32″
518M--0200 AC	7½	M	O	2″	Y	N	16 13/32″	19 19/64″	20.0	15 3/32″

SPECIFICATION OPTIONS:

A—Capacity: Gallons
B—Mounting connection: Male (M), Female (F)
C—Mounting location: Center (C)
D—Size: NPT threads
E—Drain: Yes/No
F—Screen: Yes/No
G—Height: (inches)
H—Width: (inches)
I—Shipping weight: (lbs)
J—Body diameter (inches)

MORRISON BROS. CO.

570 E. 7th Street, P.O. Box 238 | Dubuque, IA 52004-0238
t. 563.583.5701 | 800.553.4840 | f. 563.583.5028
www.morbros.com

Model 179 Series Hinged Style Fill Cap

SPECIFICATION SHEET

Designed for tank filling applications where a tight fill connection is not required. Threaded body installs onto riser pipe or directly into tank bung.

179CI (2″)

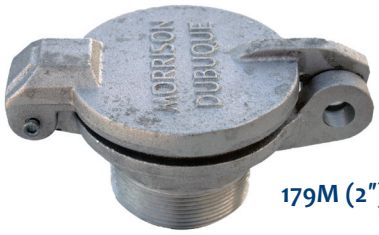

179M (2″)

Features

- Easy to open and close hinged operation
- Positive stop to prevent cover from contacting tank
- Lockable with a padlock
- Integrated venting when closed
- Your company name can be cast into the cover upon request
- **179** and **179CI** have female threads
- **179M** and **179MCI** have male threads

Construction Details

179 & 179M

- Aluminum body
- Aluminum cap
- Zinc plated steel hinge pin

179CI & 179MCI

- Cast iron (powder coated black) body
- Cast iron (powder coated black) cap
- Zinc plated steel hinge pin

Item Number	Material	Size	Weight (lbs)
179---0100 AC	Aluminum	2″	0.75
179---0200 AC	Aluminum	2½″	1.0
179---0300 AC	Aluminum	3″	1.0
179---0400 AC	Aluminum	4″	2.0
179M--0100 AC	Aluminum	2″	0.75
179M--0200 AC	Aluminum	2½″	1.25
179CI-0100 AC	Cast iron	2″	2.50
179MCI0100 AC	Cast iron	2″	2.75

MORRISON BROS. CO.

570 E. 7th Street, P.O. Box 238 | Dubuque, IA 52004-0238
t. 563.583.5701 | 800.553.4840 | f. 563.583.5028
www.morbros.com

Rochester Sensors | QUICK TURN

FPI SENSORS INTERNATIONAL

A HIGHER LEVEL OF SATISFACTION

Continuous Level (4-20ma)

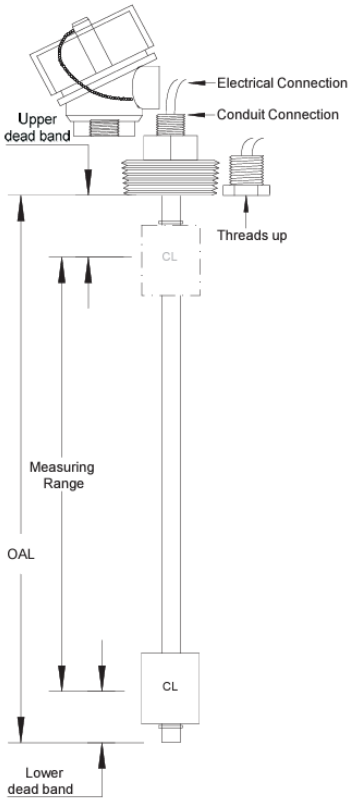

Continuous Output Level Sensor

Our loop powered 4-20mA sensors are reliable and easy to install. These sensors will arrive at your plant, ready to install into your equipment. No calibration is needed. Simply install into your tank and connect the 2 wires. That is it. These sensors are tough. They are used in demanding applications with years of reliable, accurate performance. There is no drift and they never need calibration.

FPI Sensors Continuous Output Level Sensor (transmitter) is a 4-20 mA (or 0-5 volt) output, reliable tank measuring sensor.

These continuous output level sensors come pre-programmed and no calibration is needed. Installation could not be easier, just mount the continuous output level sensor into your tank, wire to your controller and you are done. FPI's versatile Continuous Level Output Sensor (transmitter) is available in a variety of materials, lengths and mounting options making it an ideal choice for most liquid level sensor applications.

Our unique modular design allows us to build sensors with measuring lengths of 2" to 120" while maintaining a ¼" resolution.

FPI's Continuous Level Sensor is engineered with a focus on durability. In the unlikely event a single internal component was to fail, the sensor output would only be affected in an isolated area allowing the balance of the measuring range to effectively operate.

FPI offers many customization options including an independent alarm switch point(s). These alarm points provide a back-up signal that is completely self-contained and separate from the continuous output level sensor. Another option is to integrate a temperature sensor (Thermistor, Thermocouple, RTD etc.) in the continuous output level sensor assembly.

FPI liquid level sensor products are engineered to meet your exact specifications. Our customers often realize that customization will improve their equipment performance, simplify the sensors integration into their equipment, and lower overall equipment costs.

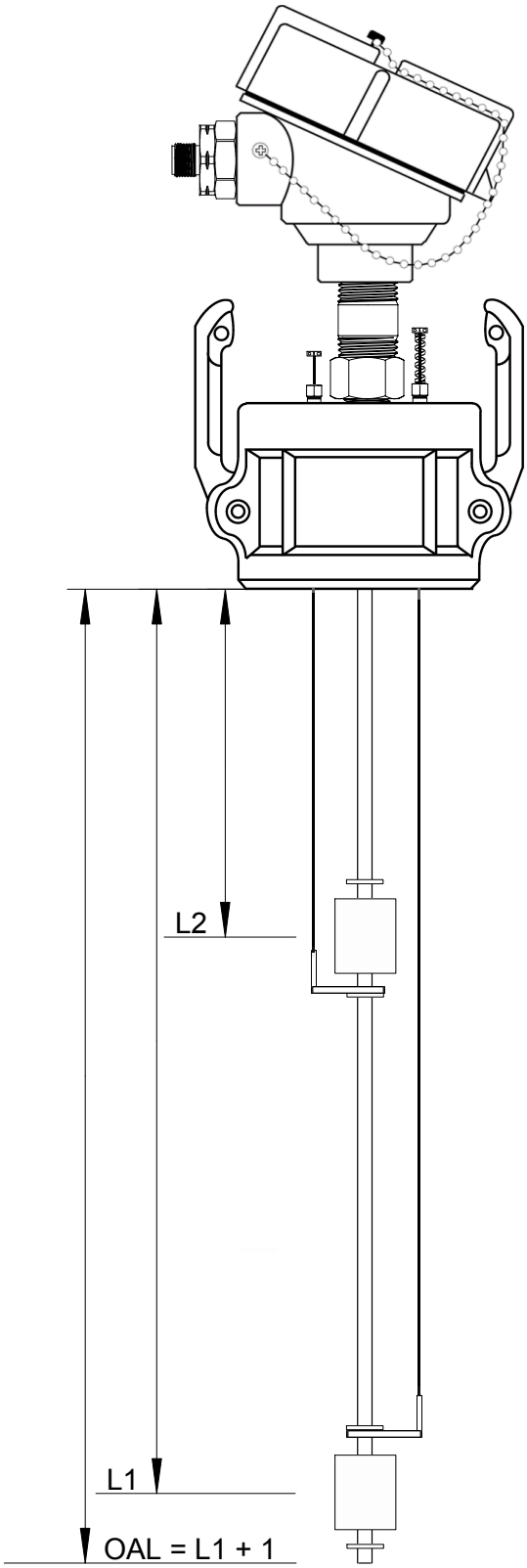

PHOENIX PRODUCTS DUAL LIFTER TEMPLATE

DESCRIPTION: BRASS STEM, 2" ALUM CAMLOCK, TWO LEVEL, B1000.6 FLOAT, CLIPS, 50W SPST, 4-PIN M12 CONNECTOR

MOUNTING FITTING: 2" Aluminum Camlock-DC

STEM: 5/16" Brass

FITTINGS REQUIRED: 1/2M x 1/4M Brass Reducing Nipple, 1/2M x 2" Brass Nipple

ACTUATION:

Level	Actuation	Operation	Float	SG	Stops
L2	**90%**	NO	Buna 1000	.60	Brass Clips
L1	**25%**	NC	Buna 1000	.60	Brass Clips
OAL					

CONNECTOR: Surface Mount - 4-Pin M12 Male Single Keyway

WIRING: Common - Pin 4 - Black

Level	Type	Reed Switch	Wire Color(s)
L2	SPST	50W - 27-33 AT	Pin 2 - White
L1	SPST	50W - 27-33 AT	Pin 1 - Brown

HOUSING: NEMA 4X XP

NAME PLATE: Phoenix Products

MATCHING CORDSET: 4-Pin female single keyway - 2M (include with sensor)

PROJECT #:25-519309

a) **Inner tank height:** 13 "

b) **Riser height:** .25 " (Weld flange = 1"/Riser height can't be 0")

c) **L2 Alarm set point:** 90 %

d) **L1 Alarm set point:** 25 %

e) **Check one:**

_____ 2" Male threaded "Type F" camlock adapter

_____ 2" Female threaded "Type A" camlock adapter

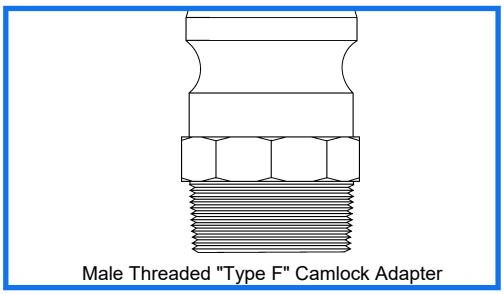
Male Threaded "Type F" Camlock Adapter

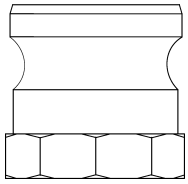
Female Threaded "Type A" Camlock Adapter

FDEP EQ# 817

Drawing not to scale

FPI SENSORS INTERNATIONAL
A HIGHER LEVEL OF SATISFACTION

Rev.000 Initial Requirements 09/01/20	Date:	Part: LS1001-PHXP-
	Tolerances: Decimals: +/- .10" Fractions: +/- 1/16"	This drawing is the property of FPI Sensors. Do not distribute without permission from FPI Sensors.

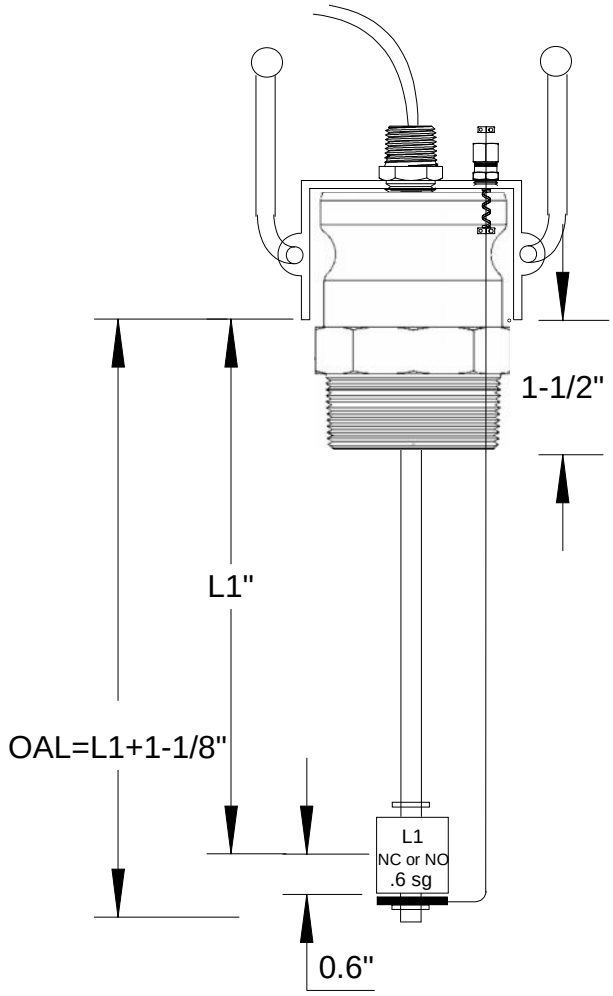

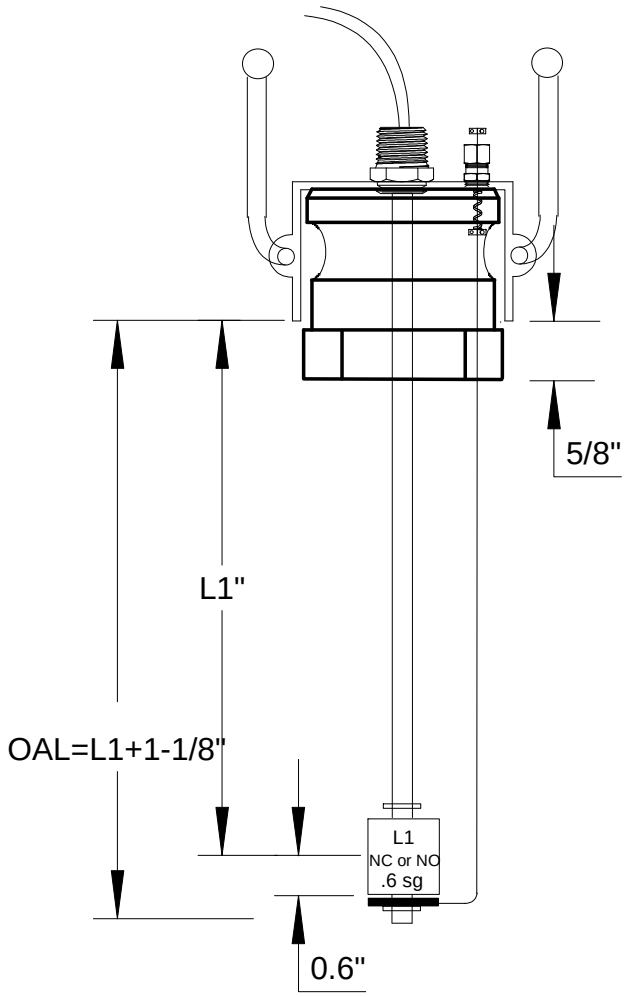

FITTING: Aluminum 2" Cam & Groove Fitting

STEMS: 5/16" Dia, Brass

CONDUIT CONNECT: 1/2" Male NPT, Brass

FLOAT: Buna 1000, (1" dia. x 1" tall)

FLOAT STOPS: 5/16" Brass Retaining Rings

SWITCH SIZE: 50 Watt, SPST (265V, 1A Maximum Values)

WIRE: 22 ga, PTFE 48"

WIRING: NC or NO Red Wires

HOUSINGS: None

APPROVALS: FDEP EQ# 817

Notes:
1. Drawing is not to scale
2. Includes 2" Male Threaded "Type F" camlock adapter OR 2" Female Threaded "Type "A" camlock adapter

PROJECT #: **25-519309**

a) Inner tank height: **13** "

b) Riser height: **.25** " (Weld flange = 1"/Riser height can't be 0")

c) Alarm set point: LEAK %

d) Check one:
_X_ 2" Male Threaded "Type F" camlock adapter
____ 2" Female Threaded "Type A" camlock adapter

e) e) Check one: N.O. _X_ N.C.____
*Approximate Thread Engagement of 2" NPT

FPI SENSORS INTERNATIONAL
A HIGHER LEVEL OF SATISFACTION
1-800-852-9984 F-651-681-1888 info@FPIsensors.com

			DATE: 10-24-18	PART #: LS1001-PHXP-
			TOLERANCES Decimals: +/- .1 Fractions: +/- 1/16	THIS DRAWING IS THE PROPERTY OF FPI SENSORS DO NOT DISTRIBUTE WITHOUT PERMISSION FROM FPI SENSORS
Rev. 1				

ASHCROFT®
Trust the shield.®

1490 Low Pressure Diaphragm Gauge

- ***Glass-filled polysulfone case material, won't rust or dent***
- ***Beryllium copper diaphragm***
- ***Brass socket***
- ***Wetted materials of beryllium copper, brass, polysulfone and RTV silicone***

The Ashcroft® Type 1490 low pressure diaphragm gauge is designed to measure pressure from 10 in. H_2O to 15 psi, both positive and negative pressures. This gauge uses a very sensitive diaphragm capsule to measure low pressure and vacuum. The gauge is specifically designed for use whenever the pressure medium is a gas that is not corrosive to beryllium copper, brass, polysulfone and RTV silicone. The polysulfone case is suitable for intermittent or continuous service on natural gas provided a .013 throttle plug is installed in the socket. Typical applications are, but not limited to, vacuum pumps, gas leak detectors, air compressors, air filters, gas burners, gas measurement, vacuum ovens, suction regulators and respirators.

PRODUCT SPECIFICATIONS

Model Number:	1490
Accuracy:	±2-1-2% full scale (Grade A, ASME B40.100)
Ranges:	10 in. H_2O through 15 psi including vac. and compound
Dial Size:	2½″ and 3½″ diameter
Case Material:	Black, glass filled polysulfone
Socket Material:	Brass
Movement:	Brass
Sensing Element:	Beryllium copper diaphragm
Wetted Material:	Beryllium copper, brass, polysulfone and RTV silicone
Window:	Polycarbonate, quarter turn bayonet style mounting
Dial:	Aluminum, white background, black figures and intervals.
Pointer:	Black, aluminum, fixed
Connection Size:	⅛ NPT (01) ¼ NPT (02) ⅛″ tubing hose barb (HD) 3⁄16″ tubing hose barb (HE) ¼″ tubing hose barb (HF) ¼″ O.D. polytube hose barb (HG) 10-32 2B female thread (HH)
Connection Location:	Lower (L) Center Back (B) Top (T) 3 o'clock (D) 9 o'clock (E)
Operating Temperature:	–40 to 180°F
Proof Pressure:	150% of range
Burst Pressure:	Up to 5 psi = 50 psi Greater than 5 psi = 100 psi

OPTIONAL FEATURES

1% Accuracy:	XAN
Dial Marking:	XDA
Stainless Steel Tag:	XNH
Paper Tag:	XNN
Throttle Plug:(1)(3)	XTU
Throttle Screw:(4)	XTS
U-clamp:(2)	XUC
FlutterGuard™:	XZY

(1) A throttle plug must be installed in the socket whenever the gauge is used for intermittent or continuous service on natural gas.
(2) U-clamp furnished when hose barb or female thread is specified.
(3) Throttle plug not available with hose barb or female thread connections.
(4) .020 throttle screw available with HH connection only.

All specifications are subject to change without notice.
All sales subject to standard terms and conditions.
© Ashcroft Inc. 2018 07/18

Ashcroft Inc., 250 East Main Street, Stratford, CT 06614 USA
Tel: 203-378-8281 • Fax: 203-385-0408
email: info@ashcroft.com • www.ashcroft.com

ASHCROFT®
Trust the shield.®

1490 Low Pressure Diaphragm Gauge

STANDARD RANGES

Pressure	Figure Intervals	Minor Graduation
0/10 in.H_2O	1	0.1
0/15 in.H_2O	5	0.2
0/30 in.H_2O	5	0.5
0/60 in.H_2O	10	1
0/100 in.H_2O	10	1
0/160 in.H_2O	20	2
0/200 in.H_2O	20	2
0/300 in.H_2O	50	5
0/10 oz./in.^{2}	1	0.1
0/15 oz./in.^{2}	5	0.2
0/30 oz./in.^{2}	5	0.5
0/60 oz./in.^{2}	10	1
0/100 oz./in.^{2}	10	1
0/160 oz./in.^{2}	20	2
0/250 oz./in.^{2}	50	5
0/3 psi	0.5	0.05
0/5 psi	1	0.1
0/10 psi	1	0.1
0/15 psi	5	0.2

STANDARD RANGES (Cont.)

Vacuum	Figure Intervals	Minor Graduation
15/0 in.H_2O	5	0.2
30/0 in.H_2O	5	0.5
60/0 in.H_2O	10	1
100/0 in.H_2O	10	1
200/0 in.H_2O	20	2
15/0 oz./in.^{2}	5	0.2
30/0 oz./in.^{2}	5	0.5
60/0 oz./in.^{2}	10	1
100/0 oz./in.^{2}	10	1
Compound		
–30/30 in.H_2O	10	1
–30/30 in.oz./in.^{2}	10	1
–10/10 in.H_2O	2	0.2

Dual Scale

Range		Graduations			
		Inner Scale		Outer Scale	
Inner Scale	Outer Scale	Figure Intervals	Minor Grad.	Figure Intervals	Minor Grad.
0/9 oz./in.^{2}	0/15 in.H_2O	1	0.2	5	0.2
0/20 oz./in.^{2}	0/35 in.H_2O	5	0.5	5	0.5
0/35 oz./in.^{2}	0/60 in.H_2O	5	0.5	10	1
0/60oz./in.^{2}	0/100 in.H_2O	10	1	10	1

Other ranges available on request. Consult factory.

STANDARD METRIC RANGES

Pressure	Figure Intervals	Minor Graduation
0/60 cm. H_2O	10	1
0/2.5 kPa	0.5	0.05
0/4 kPa	1	0.1
0/10 kPa	1	0.1
0/16 kPa	2	0.2
0/25 kPa	5	0.5
0/40 kPa	10	1
0/100 kPa	10	1
Vacuum		
2.5/0 kPa	0.5	0.05
4/0 kPa	1	0.1
10/0 kPa	1	0.1
16/0 kPa	2	0.2
25/0 kPa	5	0.5
40/0 kPa	10	1
100/0 kPa	10	1
Compound		
–10/60 cm H_2O	10	1
–10/80 cm H_2O	10	1
–20/40 cm H_2O	10	1
–10/100 cm H_2O	10	1
–10/120 cm H_2O	20	2

SELECTION TABLE

Dial Size		Type		Wetted Material		Conn. Size & Type		Connection Location		Ranges		Optional Features	
Code	Desc.	Code	Description	Code	Description	Code	Description	Code	Description	Code	Description	Code	Description
25	2½″	1490	Low Pressure Diaphragm Gauge	A	Beryllium Copper	01	⅛ NPT	L	Lower	10 IW	0 to 10 in.H_2O	XAN	1% Opt. Accuracy
35	3½″				Brass	02	¼ NPT	B	Center Back			XDA	Dial Marking
					Polysulfone	HD	⅛″ I.D.Tubing Hose Barb(2,3)	T	Top		See Chart for Entire List of Ranges	XNH	Stain. Steel Tag
					RTV Silicone	HE	3/16″ I.D.Tubing Hose Barb(2,3)	D	3 O'Clock			XNN	Paper Tag
						HF	¼″ I.D.Tubing Hose Barb(2,3)	E	9 O'Clock			XTU(1,3)	Throttle Plug
						HG	¼″ O.D. Polytube Hose Barb(2,3)					XTS(4)	Throttle Screw
						HH	10-32-2B Female Thread(2,3,5)					XUC(2)	U-clamp
												XZY	FlutterGuard™

(1) A throttle plug must be installed in the socket whenever the gauge is used for intermittent or continuous service on natural gas.
(2) U-clamp furnished when hose barb or female thread is specified.
(3) Throttle plug not available with hose barb or female thread connections.
(4) .020 throttle screw available with HH connection only.

HOW TO ORDER: 25 1490 A 02L XXX 10 IW

1. Dial size – 2½ (25), 3½ (35)
2. Case type
3. Wetted material
4. Connection size – ¼ (02), ⅛ (01)
5. Connection location – Lower (L), Back (B)
6. Optional features
7. Standard pressure range – 10 in.H_2O

ISO 9001
REGISTERED FIRM

BULLETIN DG-1490

All specifications are subject to change without notice.
All sales subject to standard terms and conditions.
© Ashcroft Inc. 2018 07/18

Ashcroft Inc., 250 East Main Street, Stratford, CT 06614 USA
Tel: 203-378-8281 • Fax: 203-385-0408
email: info@ashcroft.com • www.ashcroft.com

1490 Low Pressure Diaphragm Gauge

DIMENSIONS

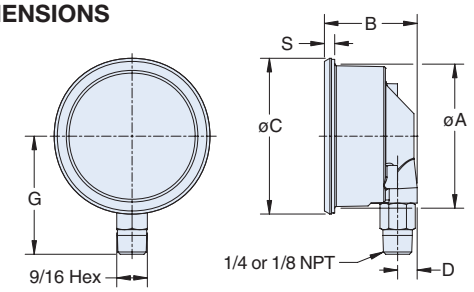

Size	øA	B	øC	D	G	S
25	2 19/32 (66)	1 23/32 (44)	2 7/8 (73)	3/8 (10)	2 3/16 (55)	13/64 (5)
35	3 21/32 (93)	1 11/16 (43)	3 31/32 (101)	3/8 (10)	2 23/32 (69)	13/64 (5)

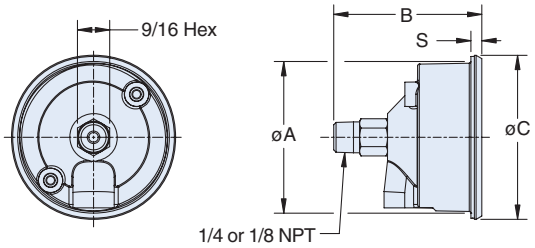

Size	øA	B	øC	S
25	2 19/32 (66)	2 19/32 (66)	2 7/8 (73)	13/64 (5)
35	3 21/32 (93)	2 9/16 (65)	3 31/32 (101)	13/64 (5)

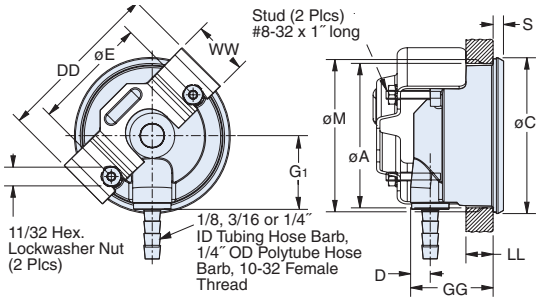

Size	øA	øC	D	øE	G				G1	øM	S	DD	GG	LL Max.	WW
					1/8 ID Tubing	3/16 ID Tubing	1/4 ID Tubing	1/4 OD Tubing	10-32 Female						
25	2 19/32 (66)	2 7/8 (73)	3/8 (10)	2 1/8 (54)	1 3/4 (44)	2 1/8 (54)	2 9/32 (54)	1 3/4 (44)	1 11/32 (34)	2 21/32 (67)	13/64 (5)	3 1/16 (78)	1 19/32 (40)	1/2 (13)	1 (25)
35	3 21/32 (93)	3 31/32 (101)	3/8 (10)	3 3/16 (67)	2 5/16 (59)	2 21/32 (81)	2 13/16 (54)	2 5/16 (59)	1 31/32 (50)	3 3/4 (95)	13/64 (5)	4 1/8 (105)	1 17/32 (39)	1/2 (13)	1 (25)

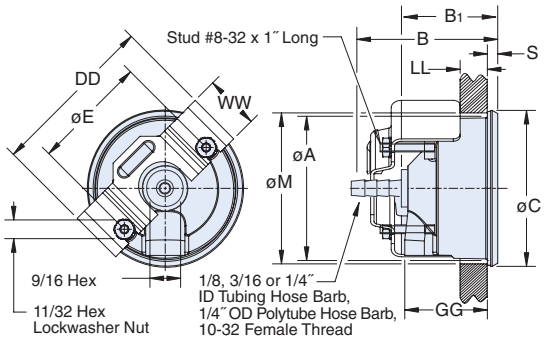

Size	øA	B				B1	øC	øE	øM	S	DD	GG	LL Max.	WW
		1/8 ID Tubing	3/16 ID Tubing	1/4 ID Tubing	1/4 OD Tubing	10-32 Female								
25	2 19/32 (66)	2 3/16 (55)	2 17/32 (64)	2 11/16 (68)	2 3/16 (55)	1 25/32 (45)	2 7/8 (73)	2 1/8 (54)	2 21/32 (67)	13/64 (5)	3 1/16 (78)	1 19/32 (40)	1/2 (13)	1 (25)
35	3 21/32 (93)	2 1/8 (54)	2 1/2 (63)	2 21/32 (67)	2 1/8 (54)	1 23/32 (44)	3 31/32 (101)	3 3/16 (81)	3 3/4 (95)	13/64 (5)	4 1/8 (105)	1 17/32 (39)	1/2 (13)	1 (25)

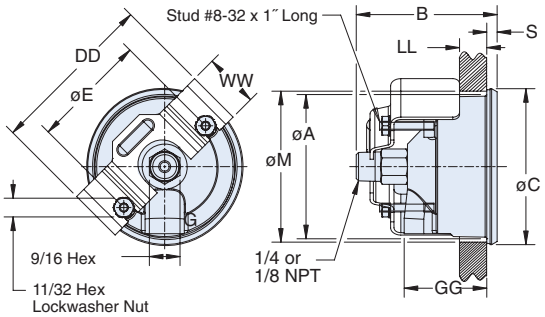

U-clamp Option

Size	øA	B	øC	øE	øM	S	DD	GG	LL MAX	WW
25	2 19/32 (66)	2 19/32 (66)	2 7/8 (73)	2 1/8 (54)	2 21/32 (67)	13/64 (5)	3 1/16 (78)	1 19/32 (40)	1/2 (13)	1 (25)
35	3 21/32 (93)	2 9/16 (65)	3 31/32 (101)	3 3/16 (81)	3 3/4 (95)	13/64 (5)	4 1/8 (105)	1 17/32 (39)	1/2 (13)	1 (25)

All specifications are subject to change without notice.
All sales subject to standard terms and conditions.
© Ashcroft Inc. 2018 07/18

Ashcroft Inc., 250 East Main Street, Stratford, CT 06614 USA
Tel: 203-378-8281 • Fax: 203-385-0408
email: info@ashcroft.com • www.ashcroft.com

Model 691 & 691B Full Port Brass Ball Valve

SPECIFICATION SHEET

Ball valves are used throughout fuel piping systems where a shut-off is required or desired.

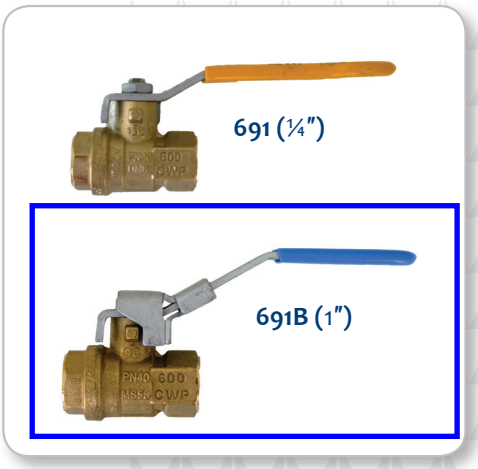

Features

- Quarter turn operation
- Full port for maximum flow and minimum pressure drop
- Can be operated in partial open position for flow control
- Double seal allows the valve to be operated in both directions
- Blowout proof stem
- 600 PSIG non-shock cold working pressure rating for ¼″ to 2″ size
- 450 PSIG non-shock cold working pressure rating for 2½″ to 4″ size
- Can be used for air service
- **691B** is lockable with a padlock

Construction Details

- Forged brass body
- Hard chrome plated ball
- Teflon® seal

Certifications & Listings

UL 842 listed for flammable liquids,
UL 125 listed for LP gas shut-off,
CSA approved,
ULC listed (ULC/ORD-C125-1992, ULC/ORD-C842-M1984 and ULC/ORD-C258-03)

I.D. Number	Size	A	B	C	Port Size	Weight (lbs)
691---0100 1V	¼″	1.771	1.496	3.228	0.314	0.30
691---0200 1V	⅜″	1.771	1.496	3.228	0.393	0.30
691---0300 1V	½″	2.32	1.69	3.94	0.59	0.50
691---0400 1V	¾″	2.519	1.968	4.724	0.787	0.80
691---0500 1V	1″	3.188	2.125	4.724	0.984	1.17
691---0600 1V	1¼″	3.661	2.874	6.22	1.259	1.93
691---0700 1V	1½″	4.015	3.11	6.22	1.574	2.40
691---0800 1V	2″	4.763	3.385	6.22	1.968	4.02
691---0900 1V	2½″	6.141	5.196	10.04	2.559	10.0
691---1000 1V	3″	6.968	5.551	10.04	3.149	13.65
691---1100 1V	4″	8.504	6.062	10.04	3.937	22.0
691B--0100 1V	¼″	1.771	1.496	3.228	0.314	0.30
691B--0200 1V	⅜″	1.771	1.496	3.228	0.393	0.30
691B--0300 1V	½″	2.32	1.69	3.94	0.59	0.50
691B--0400 1V	¾″	2.519	1.968	4.724	0.787	0.80
691B--0500 1V	1″	3.188	2.125	4.724	0.984	1.17
691B--0600 1V	1¼″	3.661	2.874	6.22	1.259	1.93
691B--0700 1V	1½″	4.015	3.11	6.22	1.574	2.40
691B--0800 1V	2″	4.763	3.385	6.22	1.968	4.02
691B--0900 1V	2½″	6.141	5.196	10.04	2.559	10.0
691B--1000 1V	3″	6.968	5.551	10.04	3.149	13.65
691B--1100 1V	4″	8.504	6.062	10.04	3.937	22.0

NOTE: All dimensions are in inches.

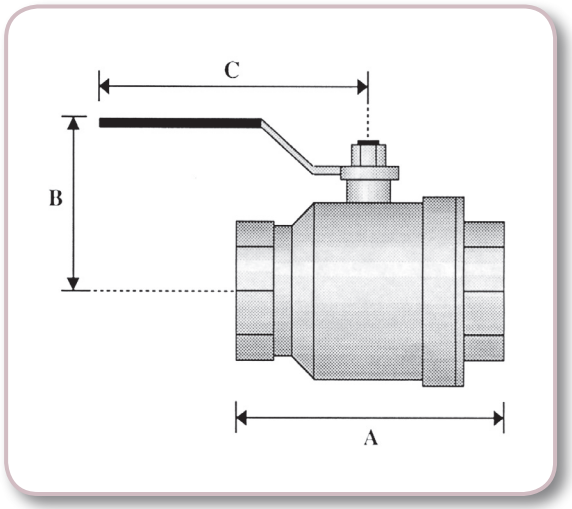

MORRISON BROS. CO.

570 E. 7th Street, P.O. Box 238 | Dubuque, IA 52004-0238
t. 563.583.5701 | 800.553.4840 | f. 563.583.5028
www.morbros.com

Generator Enclosures

Weather, corrosion, and wind load resistant enclosures

phoenixproducts

Generator Protection At Its Best

Custom built to fit the generator and sub-base fuel tank, all Phoenix Products generator enclosures are designed and engineered to ensure proper generator performance and manufactured with quality materials to protect your investment.

Phoenix Products enclosures are fully assembled in our 100,000-square foot production facility. Starting with detailed engineering designs, we form the metal, fabricate the units, finish the inside as required and package as necessary. In addition to performing sophisticated installation of mufflers, radiators, breakers and switchgear, our state-of-the-art CNC equipment and more than 50 tons of crane capacity enable us to package all sizes and types of generators, fuel tanks and enclosures.

Superior Water Intrusion Prevention & Sound Attenuation

All Aluminum With Stainless Steel Hardware

phoenixproducts™

1727 Bennett Street, Jacksonville, FL 32206 • 904-354-1858 • 904-354-7929 Fax

phoenix.sales@phoenixprods.com • www.phoenixprods.com

Fully weather, corrosion and wind load resistant all aluminum enclosure

Standard Features:

- Interlocking prepainted(both sides) 14-gauge aluminum side panels with stainless steel fasteners provide light weight corrosion resistance
- Mill finish aluminum roof panels with interlocking standing seam design capable of supporting 75 pounds per square foot
- Reinforced 36″ x 82″ aluminum single or double doors with weatherproofing gasket, drip rail and stainless steel hardware with lockable handles and panic hardware
- Fixed aluminum intake louvers with bird screens and gravity-open aluminum discharge dampers with counterbalance weights
- Exhaust silencer mounting brackets
- Wind load rating of 150 MPH
- Extruded aluminum channel framing
- Stainless steel door holder latches

Optional Certifications

- Miami-Dade County Notice of Acceptance
- Department of Business and Professional Regulation
- Florida Building Code
- UL 2200

Options

- Motorized air intake and outlet dampers
- Sound attenuation
- Stainless steel hold-downs
- Electrical and lighting systems and emergency stop
- Wind load rating up to 200 MPH
- Interior silencer
- Interior AC/DC lights with timer switch
- Extreme cold weather temperature control system
- Stainless steel or carbon steel construction
- Custom paint colors
- High Velocity Hurricane Zone (HVHZ) Construction
- PE signed & sealed drawings

phoenixproducts

phoenixproducts™
1727 Bennett Street, Jacksonville, FL 32206 • 904-354-1858 • 904-354-7929 Fax
phoenix.sales@phoenixprods.com • www.phoenixprods.com

GREENHECK® Extruded BACKDRAFT DAMPER

DAMPERS AND LOUVERS

EM-31 SERIES
Vertical Mount - Horizontal Airflow

Application and Design

The EM-**31** series is a vertical mounted backdraft damper that is designed to allow horizontal airflow and prevent reverse airflow. The damper is opened by air pressure differential and closed by gravity.

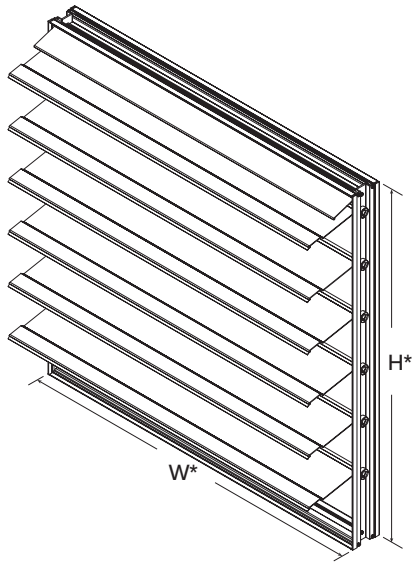

*W & H dimensions furnished approximately ¼ in. under size.

Ratings (See page 2 for specific limitations)

Pressure: 4.0 - 10.0 in. w.g. - differential pressure.

Velocity: 2500 to 3500 fpm.

Temperature: 180°F.

Standard Construction

Frame: Heavy gauge 6063T5 extruded aluminum. (0.125 in. thickness)

Blades: Heavy gauge 6063T5 extruded aluminum. (0.070 in. thickness)

Axles: ¾ in. dia. metallic.

Bearings: Synthetic (acetal) sleeve type.

Linkage: ⅛ in. plated steel.

Blade Seals: Vinyl.

Size Limitations

Minimum Size (without weights)**:** 8 in. W x 8 in. H

Minimum Size (with weights)**:** 8 in. W x 11 in. H

Maximum Size: 48 in. W x 74 in. H

Sizes larger than maximum shown will be supplied as two or more equal size smaller dampers required to make up the size specified. These larger multiple damper assemblies require field assembly and may require additional reinforcement (not supplied by Greenheck) to support the assembly.

Options and Accessories

- 1½ in. flange on discharge: EM-31
- Counterbalance Weights
- APC (Adjustable Pressure Controller). Allows field setting of relief pressure on all EM dampers. Use one per panel. Maximum recommended pressure set limitations are as follows:

(EM-31 damper must be equipped with counterbalance.)

Area (ft^2)	Max. Set Pressure (in. wg)
4	.75
6	.50
8	.40
10	.30
15	.20
20	.15
24	.125

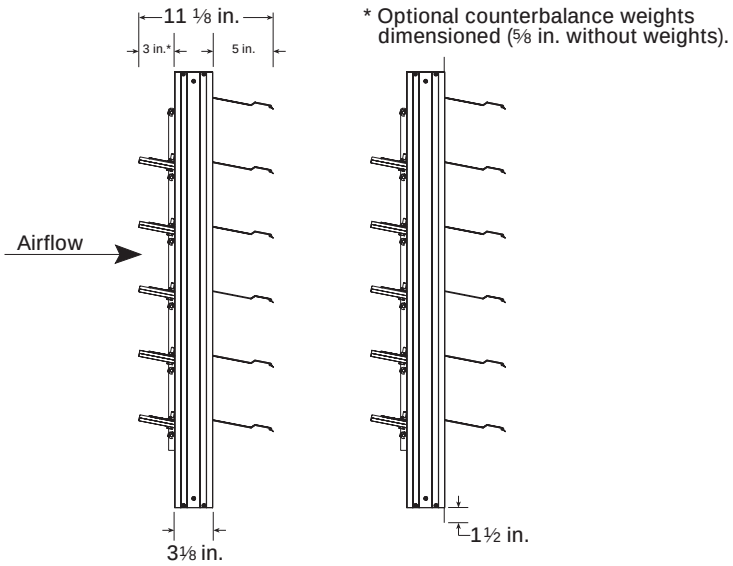

EM-31
Flange On Discharge

PERFORMANCE DATA EM-31

Performance data results from testing a 36 in. x 36 in. damper in accordance with AMCA Standard 500 using Figure 5.3 and Figure 5.5. All data has been corrected to represent standard air at 0.075 lb/ft^3.

Operational Data			ΔP in. w.g.	Velocity fpm
Figure 5.3	Without Weights	Blades Start to Open	0.03	10
		Blades Fully Open	0.25	2500
	With Weights	Blades Start to Open	0.01	10
		Blades Fully Open	0.055	1200
Figure 5.5	Without Weights	Blades Start to Open	0.025	10
		Blades Fully Open	0.32	1200
	With Weights	Blades Start to Open	0.012	10
		Blades Fully Open	0.08	700

Leakage testing was conducted in accordance with AMCA Standard 500 and is expressed as CFM per sq. ft. of damper face area. All data has been corrected to represent standard air at 0.075 lb/ft^3.

Leakage

36 in. x 36 in. Damper

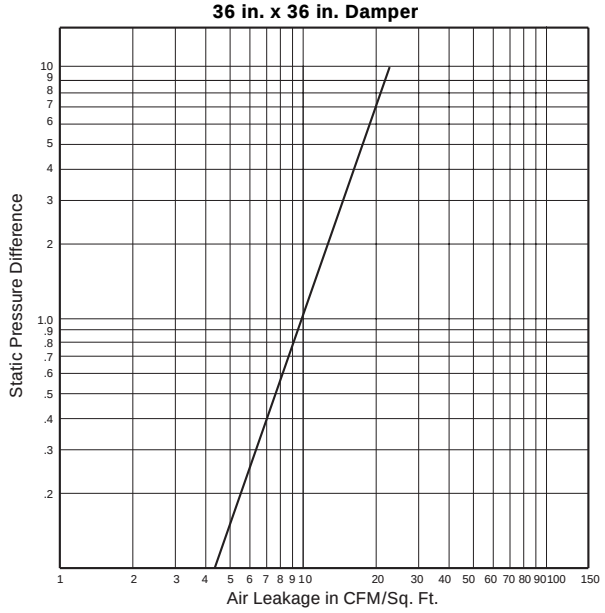

Pressure Drop

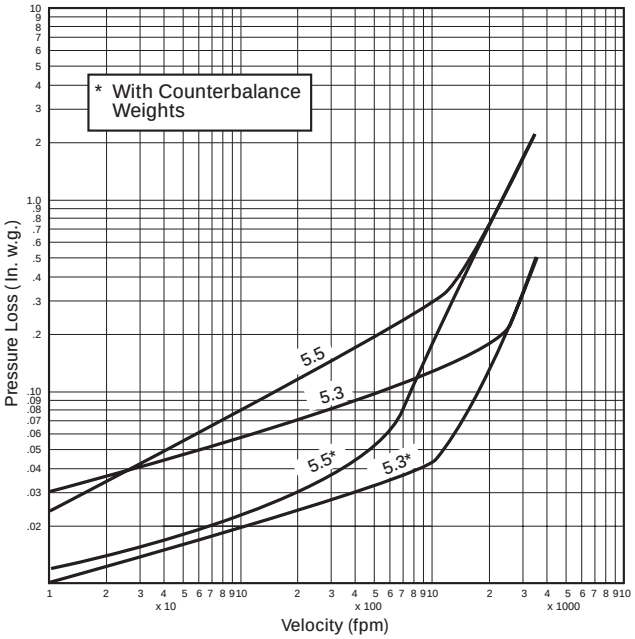

Pressure Limitations

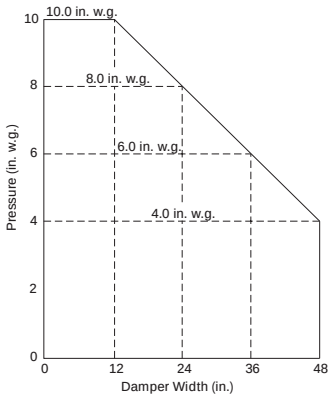

Velocity Limitations

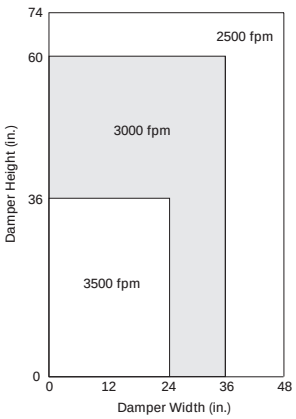

Specifications

Backdraft dampers meeting the following specifications shall be furnished and installed where shown on plans and/or as described in schedules. Dampers shall consist of: heavy gauge 6063T5 extruded aluminum channel frame (0.125 in. thick) with 3⅛ in. depth; blades from 0.070 in. 6063T5 extruded aluminum; ¾ in. dia. metallic axles turning in acetal bearings; damper shall be equipped with extruded vinyl blade seals; and internal ⅛ in. plated steel blade-to-blade linkage. Damper manufacturer's printed application and performance data including pressure, velocity and temperature limitations shall be submitted for approval showing damper suitable for pressures to 10 in. w.g., velocities to 3500 fpm and temperatures to 180°F. Testing and ratings to be in accordance with AMCA Standard 500. Basis of design is Greenheck model EM-31.

GREENHECK®
P.O. BOX 410 SCHOFIELD, WISCONSIN 54476-0410
PH. 715-359-6171
www.greenheck.com

Copyright © 2001 Greenheck Fan Corp.

BERGARI SOLUTIONS

DS Series

DISK SILENCERS

CRITICAL GRADE

Critical grade disk silencers are best suitable for applications where a substantial level of sound attenuation is required. Disk silencers are excellent choices for housed applications where available space is limited and exhaust system heat rejection must be minimized. Typical sound attenuation for this grade is in the range of 25 to 32 dB(A) on diesel and gaseous fueled reciprocating industrial engines. Custom disk silencers are readily available with a multitude of options to meet your specific needs.

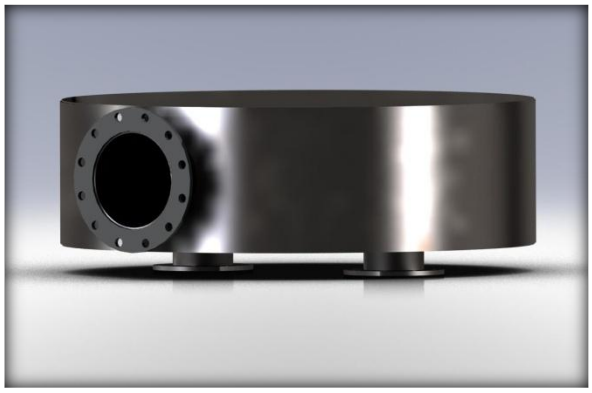

DSC-16 in 304 stainless

Standard Features

- Continuously welded heavy duty steel construction
- Internally insulated with 2″ insulation on shell surfaces
- ANSI 125/150# flanges
- Four standard mounting lugs
- High temperature black finish – rated to 1000F

Optional Features

- Dual Inlets – special orientation to optimize installation fit-up
- Spark Arresting chamber
- ISO container top mount design
- Special flanges and port connections
- Support structures and brackets

Material & Finishing options available

- Metallized Aluminum Spray Coat Finish with 100% protected outer surfaces
- High Performance paint options
- External Insulation - High-Temp Silicone Impregnated Canvas
- ~~Stainless Steel – 304, 316, 321~~

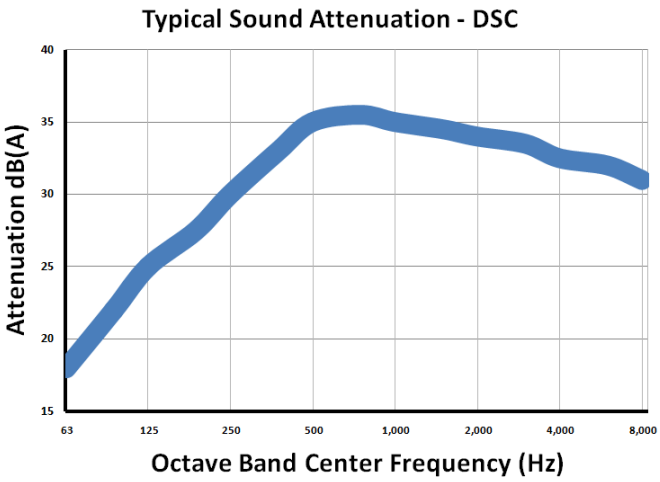

DIMENSIONS (Inches)

Model	A	B	C	D	E	F	G	H	I	BC	Lbs.
DSC-04	4.00	28	32	8	12	8	18	4	22.6	32	125
DSC-05	5.00	29	33	10	14	9	18.5	5	23.3	33	160
DSC-06	6.00	33	37	12	16	10	20.5	6	26.2	37	215
DSC-08	8.00	45	49	14	18	11	26.5	7	34.6	49	380
DSC-10	10.00	54	58	16	20	12	31	8	41.0	58	630
DSC-12	12.00	62	66	18	22	13	35	9	46.6	66	798
DSC-14	14.00	66	70	24	28	16	37	12	49.5	70	1056
DSC-16	16.00	72	76	26	30	17	40	13	53.8	76	1185
DSC-18	18.00	84	88	28	32	18	46	14	62.3	88	1655
DSC-20	20.00	96	100	30	34	19	52	15	70.8	100	2236

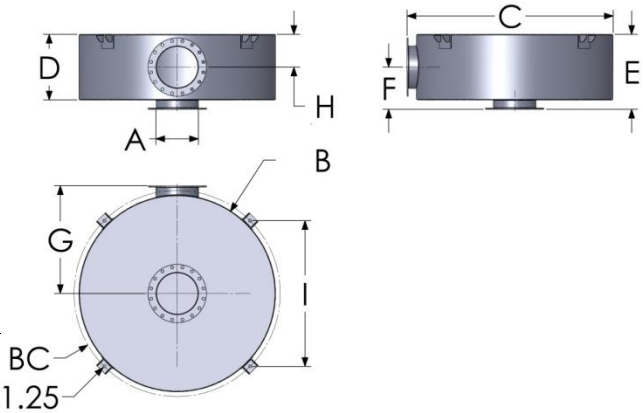

Bergari Solutions, LLC
2605 160th St. W., #109
Rosemount, MN 55068

www.bergari.com
Main Office: 651-423-7128
Mobile: 651-270-6817
Sales@bergari.com

Bergari Solutions LLC also offers a full line of exhaust system accessories of flexes, elbows, adapters and thermal insulation components to provide a complete solution for your application.

Project 25-519309

Ring Power Corp.

City of Tampa Storm Water Lake Eckles

Electrical Equipment

Specification Sheets

Danger Risk of Electric Shock Label

Item #: J5305-AFB

Label Reads: Danger Risk Of Electric Shock. Disconnect All Sources Of Supply Prior To Servicing.

Label Design: International Electricity Warning Symbol

Compliance:

- ANSI Z535 / OSHA
- LEED Compliant
- RoHS Compliant
- UL® Recognized
- California Proposition 65
- ECCN Certification
- OSHA 1910.1200(c)
- REACH SVHC
- Shipping Declarations

Material: 2 Mil UL® Recognized Peel and Stick Polyester Label

Laminate: UL® Recognized Clear Polyester

Product data sheet
Characteristics

MPUB10S40FSS
Unit Substation, Mini Power-Zone, 1 Phase, 10kVA, 480V Pri, 120/240V Sec, Type 3R, 304SS, 18kA, wall mounted, bolt on

Main

Certifications	UL Listed
Type	Mini Power-Zone
Phase	1 phase
Primary Voltage	480 V
Secondary Voltage	120/240 V
Full Capacity Taps	2 5 % FCBN
Power Rating	10 kVA
Temperature Rise	115 °C
Winding Material	Copper
Interrupt Rating	18 kA
Interior Type	NQ Panelboard interior
Number of Spaces Available	16.0
Number of Circuits	16.0
Enclosure Type	NEMA 3R stainless steel 316

Complementary

Height	43.20 in (1097.28 mm)
Width	16.0000000000 in (406.4 mm)
Depth	11.75 in (298.45 mm)
Product Weight	236.95 lb(US) (107.48 kg)

Ordering and shipping details

Category	US10PE216276
Discount Schedule	0PE2
GTIN	3606487189275
Returnability	No
Country of origin	US

Packing Units

Unit Type of Package 1	PCE
Number of Units in Package 1	1
Package 1 Height	11.81 in (30.0 cm)
Package 1 Width	16.06 in (40.8 cm)
Package 1 Length	43.23 in (109.8 cm)
Package 1 Weight	265.0 lb(US) (120.2 kg)

Offer Sustainability

Packaging without single use plastic	No
Packaging made with recycled cardboard	No
REACh Regulation	REACh Declaration
EU RoHS Directive	Compliant with Exemptions
RoHS exemption information	Yes

The information provided in this documentation contains general descriptions and/or technical characteristics of the performance of the products contained herein.
This documentation is not intended as a substitute for and is not to be used for determining suitability or reliability of these products for specific user applications.
It is the duty of any such user or integrator to perform the appropriate and complete risk analysis, evaluation and testing of the products with respect to the relevant specific application or use thereof.
Neither Schneider Electric Industries SAS nor any of its affiliates or subsidiaries shall be responsible or liable for misuse of the information contained herein.

Product data sheet

Specifications

Mini circuit breaker, QO, 20A, 1 pole, 120/240VAC, 10kA, plug in

QO120

Product availability: Stock - Normally stocked in distribution facility

Main

Product	Miniature circuit-breaker
Range	QO
Current Rating	20 A
Voltage Rating	120/240 V AC 120 V AC
Mounting Type	Plug-in
Number of Poles	1P
Circuit Breaker Type	Standard
Ratings	HACR and Switching Duty rated
Electrical Connection	Pressure plate

Complementary

Interrupt Rating	10 kA 120/240 V AC 10 kA 120 V AC
Number of Panel Spaces	1
Wire Size	AWG 14...AWG 8 copper or aluminium
Tightening Torque	35.4 lbf.in (4 N.m)
Height	3.0 in (76 mm)
Width	0.7 in (19 mm)
Depth	2.9 in (74 mm)
Net Weight	0.249 lb(US) (0.113 kg)

Environment

Certifications	UL Listed CSA
Ambient Rating	104 °F (40 °C)

Ordering and shipping details

Category	US1DE2A00004
Discount Schedule	DE2A
GTIN	785901400103
Returnability	Yes
Country of origin	US

Price is “List Price” and may be subject to a trade discount – check with your local distributor or retailer for actual price.

Disclaimer: This documentation is not intended as a substitute for and is not to be used for determining suitability or reliability of these products for specific user applications

Packing Units

Unit Type of Package 1	PCE
Number of Units in Package 1	1
Package 1 Height	0.700 in (1.778 cm)
Package 1 Width	3.0000000000 in (7.62 cm)
Package 1 Length	3.300 in (8.382 cm)
Package 1 Weight	4.32 oz (122.47 g)
Unit Type of Package 2	BB1
Number of Units in Package 2	10
Package 2 Height	3.200 in (8.128 cm)
Package 2 Width	3.400 in (8.636 cm)
Package 2 Length	7.700 in (19.558 cm)
Package 2 Weight	2.820 lb(US) (1.279 kg)
Unit Type of Package 3	CAR
Number of Units in Package 3	100
Package 3 Height	6.800 in (17.272 cm)
Package 3 Width	8.100 in (20.574 cm)
Package 3 Length	17.200 in (43.688 cm)
Package 3 Weight	28.700 lb(US) (13.018 kg)

Contractual warranty

Warranty	18 months

PillaSwitch

PUSH BUTTON STATIONS

Featured Product: (GS120MS)

Stainless Steel Watertight Station

FEATURES:

Rugged Stainless Steel 304 enclosure with welded seams, suitable for harsh environments including offshore

Surface mount

½" – ¾" back and bottom concentric knockouts

Exterior top and bottom mounting feet

Several operator types to choose from

1-6 contact block capacity

Enclosure is NEMA 4X rated: Provides a degree of protection against ingress of solid foreign objects (falling dirt and windblown dust), water (rain, sleet, snow, splashing water, and hose directed water); protection against corrosion, and will be undamaged by the external formation of ice on the enclosure

OPTIONS:

Station w Full Clear Cover (lockable)

Tel (904) 396-7371

Pilla Electrical Products, Inc.
4076 St. Augustine Rd. Jacksonville, FL 32207-6661 USA

www.pillaswitch.com

Station Enclosure

Height: 5.5"
Width: 4.25"
Depth: 4"

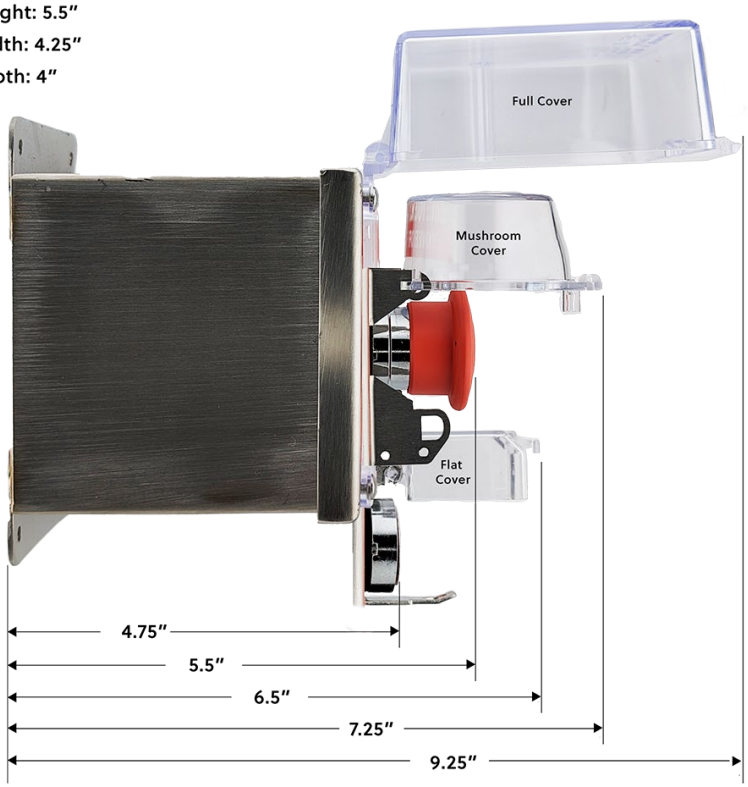

CONTACT BLOCKS

PILNCCB and PILNOCB

One standard contact block is included with the station, which has a capacity of 1-6 contact blocks (additional block ordered separately). Contact blocks are finger-safe. Robust to withstand harsh environments. Silver alloy (Ag/Ni) contacts, with 10 A cartridge fuse short-circuit protection. Easy, secure mounting system. Screw clamp terminals. Accepts two #12-#24 AWG solid or stranded wires.

Specifications of Contacts

Ambient air temperature	Device Operation	**°F(°C)**	-13 to +158 (-25 to +70)		
Contact operation	N.O. / N.C.		Slow break		
Continuous current	Maximum thermal	I_{th}	10 A (Cartridge fuse short-circuit protection upstream)		
Rated operational Specifications conforming to IEC/EN 60947-5-1	a.c. Supply: Utilization category AC-15 NEMA A600	**V**	120	240	600
		A	6	3	1.2
		VA	720	720	720
	d.c. Supply: Utilization category AC-13 NEMA Q600	**V**	125	250	600
		A	0.55	0.27	0.1

DATASHEET - FAZ-B3/1-NA

Similar to illustration

Miniature circuit breaker (MCB), 3A, 1p, B-Char, AC

Part no.	**FAZ-B3/1-NA**
Catalog No.	**132417**
Eaton Catalog No.	**FAZ-B3/1-NA**
EL-Nummer (Norway)	**1691512**

Powering Business Worldwide

Delivery program

Basic function			Miniature circuit-breakers
Number of poles			1 pole
Tripping characteristic			B
Application			Switchgear for export to North America (UL-listed)
Rated current	I_n	A	3
Rated switching capacity acc. to IEC/EN 60947-2	I_{cu}	kA	15
Product range			FAZ-NA

Technical data

Electrical

Standards			UL 489, CSA C22.2 No. 5 IEC 60947-2
Rated operational voltage	U_e	V	
	U_e	V AC	277/480 Y
		V DC	60
Rated voltage according to IEC/EN 60947-2	U_n	V AC	254
Rated voltage according to UL	U_n	V AC	277
Rated switching capacity acc. to IEC/EN 60947-2	I_{cu}	kA	15
Breaking capacity according to UL		kA	10 (UL489)
Characteristic			B, C, D
Selectivity Class			3
lifespan			
Lifespan	Operations		> 20000
Direction of incoming supply			as required

Mechanical

Standard front dimension		mm	45
Enclosure height		mm	105
Mounting width per pole		mm	17.7
Mounting			IEC/EN 60715 top-hat rail
Degree of Protection			IP20, IP40 (when fitted)
Terminals top and bottom			Twin-purpose terminals
Terminal protection			Finger and back-of-hand proof to BGV A2
Tightening torque of fixing screws		N/m	max. 2.4 UL: #18-12 AWG: 2.4 Nm (21 lb-in) #10-8 AWG: 2.8 Nm (25 lb-in) #6 AWG: 4 Nm (36 lb-in)
Mounting position			As required

Design verification as per IEC/EN 61439

Technical data for design verification			
Rated operational current for specified heat dissipation	I_n	A	3

Heat dissipation per pole, current-dependent	P_{vid}	W	0
Equipment heat dissipation, current-dependent	P_{vid}	W	2.1
Static heat dissipation, non-current-dependent	P_{vs}	W	0
Heat dissipation capacity	P_{diss}	W	0
Operating ambient temperature min.		°C	-25
Operating ambient temperature max.		°C	75
			linear, per +1 °C, results in a 0.5% reduction of current carrying capacity
IEC/EN 61439 design verification			
10.2 Strength of materials and parts			
10.2.2 Corrosion resistance			Meets the product standard's requirements.
10.2.3.1 Verification of thermal stability of enclosures			Meets the product standard's requirements.
10.2.3.2 Verification of resistance of insulating materials to normal heat			Meets the product standard's requirements.
10.2.3.3 Verification of resistance of insulating materials to abnormal heat and fire due to internal electric effects			Meets the product standard's requirements.
10.2.4 Resistance to ultra-violet (UV) radiation			Meets the product standard's requirements.
10.2.5 Lifting			Does not apply, since the entire switchgear needs to be evaluated.
10.2.6 Mechanical impact			Does not apply, since the entire switchgear needs to be evaluated.
10.2.7 Inscriptions			Meets the product standard's requirements.
10.3 Degree of protection of ASSEMBLIES			Does not apply, since the entire switchgear needs to be evaluated.
10.4 Clearances and creepage distances			Meets the product standard's requirements.
10.5 Protection against electric shock			Does not apply, since the entire switchgear needs to be evaluated.
10.6 Incorporation of switching devices and components			Does not apply, since the entire switchgear needs to be evaluated.
10.7 Internal electrical circuits and connections			Is the panel builder's responsibility.
10.8 Connections for external conductors			Is the panel builder's responsibility.
10.9 Insulation properties			
10.9.2 Power-frequency electric strength			Is the panel builder's responsibility.
10.9.3 Impulse withstand voltage			Is the panel builder's responsibility.
10.9.4 Testing of enclosures made of insulating material			Is the panel builder's responsibility.
10.10 Temperature rise			The panel builder is responsible for the temperature rise calculation. Eaton will provide heat dissipation data for the devices.
10.11 Short-circuit rating			Is the panel builder's responsibility. The specifications for the switchgear must be observed.
10.12 Electromagnetic compatibility			Is the panel builder's responsibility. The specifications for the switchgear must be observed.
10.13 Mechanical function			The device meets the requirements, provided the information in the instruction leaflet (IL) is observed.

Technical data ETIM 6.0

Circuit breakers and fuses (EG000020) / Miniature circuit breaker (MCB) (EC000042)			
Electric engineering, automation, process control engineering / Electrical installation, device / Miniature circuit breaker system (MCB) / Miniature circuit breaker (MCB) (ecl@ss8.1-27-14-19-01 [AAB905011])			
Release characteristic			B
Number of poles (total)			1
Number of protected poles			1
Nominal rated current		A	3
Nominal rated voltage		V	240
Rated short-circuit breaking capacity Icn EN 60898 at 230 V		kA	0
Rated short-circuit breaking capacity Icn EN 60898 at 400 V		kA	0
Rated short-circuit breaking capacity Icu IEC 60947-2 at 230 V		kA	15
Rated short-circuit breaking capacity Icu IEC 60947-2 at 400 V		kA	15
Voltage type			AC
Current limiting class			3
Frequency		Hz	50 - 60
Concurrently switching N-neutral			No
Suitable for flush-mounted installation			No
Over voltage category			3
Pollution degree			2

Width in number of modular spacings			1
Built-in depth		mm	70.5
Additional equipment possible			Yes
Degree of protection (IP)			IP20

Approvals

Product Standards			IEC/EN 60947-2; UL 489; CSA-C22.2 No. 5-09; CE marking
UL File No.			E235139
UL Category Control No.			DIVQ
CSA File No.			204453
CSA Class No.			1432-01
North America Certification			UL listed, CSA certified
Specially designed for North America			Yes, suitable as BCPD
Suitable for			Feeder circuits, branch circuits
Current Limiting Circuit-Breaker			Yes
Max. Voltage Rating			≤ 32 A
Degree of Protection			IEC: IP20, UL/CSA Type: -

© 08/2018 by Eaton Industries GmbH

Project:

Location:

Product Type:

Contact/Phone:

Model #:

FF Series
Commercial Series

The FF Series Commercial Auto-Off Timers are designed to replace any standard wall switch - single or multi-gang. This series of energy-efficient mechanical timers do not require electricity to operate. In addition, they automatically limit the ON times for fans, lighting, motors, heaters, and other energy consuming loads.

Features

- Hold feature enables the user to override the automatic shut-off function
- Rugged time dial plate easily withstands the abuse encountered in commercial environments
- Commercial “brushed metal” (plastic construction) look meets NEC requirements
- Time saving up front terminal connection with teeter-type terminals
- Press-on knob design ensures quick and easy installation
- CFL compatible

Not for use with sunlamps, saunas, or loads that could cause personal injury if timed incorrectly.

Ratings

Resistive:	20 Amp, 125 VAC, 50/60 Hz 10 Amp, 250 VAC, 50/60 Hz 10 Amp, 277 VAC, 50/60 Hz
Tungsten:	7 Amp, 125 VAC
Motor:	1 HP, 120 VAC, 50/60 Hz 2 HP, 240 VAC, 50/60 Hz
Dimensions:	2.79" H x 1.6" W x 1.19" D

FF15MC

FF60MC

FF30MH

FF Series

Model Number	Time Cycle	Switch	Hold	Color
FF5M	5 Minutes	SPST	No	Brushed Metal Finish
FF5MH	5 Minutes	SPST	Yes	Brushed Metal Finish
FF15MC	15 Minutes	SPST	No	Brushed Metal Finish
FF15MH	15 Minutes	SPST	Yes	Brushed Metal Finish
FF30MC	30 Minutes	SPST	No	Brushed Metal Finish
FF30MH	30 Minutes	SPST	Yes	Brushed Metal Finish
FF60MC	60 Minutes	SPST	No	Brushed Metal Finish
FF60MHC	60 Minutes	SPST	Yes	Brushed Metal Finish
FF2H	2 Hours	SPST	No	Brushed Metal Finish
FF4H	4 Hours	SPST	No	Brushed Metal Finish
FF6H	6 Hours	SPST	No	Brushed Metal Finish
FF6HH	6 Hours	SPST	Yes	Brushed Metal Finish
FF12HC	12 Hours	SPST	No	Brushed Metal Finish
FF12HHC	12 Hours	SPST	Yes	Brushed Metal Finish
FF315M	15 Minutes	SPDT	No	Brushed Metal Finish
FF330M	30 Minutes	SPDT	No	Brushed Metal Finish
FF360M	60 Minutes	SPDT	No	Brushed Metal Finish
FF32H	2 Hours	SPDT	No	Brushed Metal Finish
FF32HH	2 Hours	SPDT	Yes	Brushed Metal Finish
FF34H	4 Hours	SPDT	No	Brushed Metal Finish
FF34HH	4 Hours	SPDT	Yes	Brushed Metal Finish
FF36H	6 Hours	SPDT	No	Brushed Metal Finish
FF312H	12 Hours	SPDT	No	Brushed Metal Finish
FF312HH	12 Hours	SPDT	Yes	Brushed Metal Finish
FF415M	15 Minutes	DPST	No	Brushed Metal Finish
FF430M	30 Minutes	DPST	No	Brushed Metal Finish
FF460M	60 Minutes	DPST	No	Brushed Metal Finish
FF46H	6 Hours	DPST	No	Brushed Metal Finish
FF412H	12 Hours	DPST	No	Brushed Metal Finish

Specification

The timer shall be of the appropriate dimensions and design to provide for direct replacement of a standard wall switch in a single gang 2 ½" deep junction box. The timer shall include a spiral time scale to provide easy selection of a desired time setting. Molded white knob and brushed metal finish wall plate shall be a press-on type requiring no screw or other hardware to secure. The polymeric time dial shall replace a standard switch plate without modifications. The timer shall have a UL listed rating of:

- 1 HP at 125 VAC, 50/60 Hz
- 2 HP at 250 VAC, 50/60 Hz
- 20 Amp, 120 VAC, 50/60 Hz
- 10 Amp, 250 VAC, 50/60 Hz
- 10 Amp, 277 VAC, 50/60 Hz
- 7 Amp, 125 VAC, Tungsten

The timer field wiring connections shall be secured by means of a teeter-type terminal screw to provide secure connections for appropriate wire sizes. The timer shall be _____ (SPST)(DPST)(SPDT). The timer _____ (Shall) (Shall Not) have a Hold feature and shall have a time cycle of _____(See Time Cycles Listed). The timer shall be Intermatic model _____(See Model Numbers Listed).

VFi100W50-VFiCC
Rev. 04

Job Name/Title:_____ Catalog Number_____

Contractor:_____ Notes:_____

Vaporproof Fixtures

VFi100W50- 1/2"
VFi100W75- 3/4"

64NF

VFi100W50CG-1/2"
VFi100W75CG-3/4"
VFi200W50CG-1/2"
VFi200W75CG-3/4"

VFiGLS

VFiBOX50-1/2"
VFiBOX75-3/4"

64NF

VFiCC

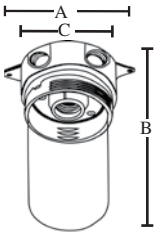

VFi100W50- 1/2"
VFi100W75- 3/4"

Features

- Ceiling mounting
- Also available in wall or pendant mounting
- All assembled fixtures are equipped with 5 holes and available with 1/2" & 3/4" threaded holes
- Socket with leads
- Heat resistant glass globe
- Prevents moisture entry
- Industrial grade, fully gasketed
- Designed to protect the interior from deteriorating effect of ice, corrosive fumes, and non-explosive vapors
- Gray

Application

- Maintains illumination for safety and performance in inclement weather
- UL listed for wet locations

Standard Material

- Rugged die cast copper free aluminum

Standard Finish

- Premium powder coat finish

Catalog Number	UPC	# of Holes	Thread Size	Ship Case	Weight/ Case	Inches A	B	C
VFi100W50	83868	**5**	**1/2"**	6	13	5.25	8.5	3.25
VFi100W75	83869	**5**	**3/4"**	6	13	5.25	8.5	3.25
VFi100W50CG	85156	**5**	**1/2"**	6	16	5.25	9	4.13
VFi100W75CG	85157	**5**	**3/4"**	6	16	5.25	9	4.13
VFi200W50CG	85561	**5**	**1/2"**	6	16	5.25	11.50	5.15
VFi200W75CG	85562	**5**	**3/4"**	6	16	5.25	11.50	5.15
VFiBOX50	83872	**5**	**1/2"**	12	13	5.25	3.5	4.13
VFiBOX75	83871	**5**	**3/4"**	12	13	5.25	3.5	4.13
Vaporproof 7" Glass Globe								
VFiGLS	85155			6	6	3.25	7	3
7" Cast Cage								
VFiCC	83936			16	11	4.25	7.25	4.13

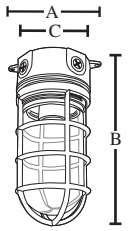

VFi100W50CG-1/2"
VFi100W75CG-3/4"
VFi200W50CG-1/2"
VFi200W75CG-3/4"

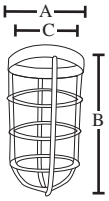

VFiCC

VFiGLS

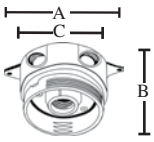

VFiBOX50-1/2"
VFiBOX75-3/4"

UL Listing:
Suitable for wet locations for use in dwellings. Suitable for use with 90° C supply wiring. Complies with UL Standard 1598. For non-hazardous locations where the lamp, socket and wiring require protection from rain, corrosive fumes, non-explosive vapors and gases. Approved for maximum 100W incandescent.

LEDMUNDO 12V -24V AC/DC 12W LED Edison Bulbs,12W 1050lumen A19 E26 Light Bulbs, Low Voltage Light Bulbs for Off Grid Solar Lighting Marine Boat RV 12V Interior Lighting for Camper (3000K Warm White)

- This AC/DC 12-24 volt led Lights for RV interior lighting for camper, low voltage 12-24v LED Light bulbs perfect for boat cabin lighting, Marine replacement bulb, RV bulbs, solar battery powered light bulbs, off grid LED bulbs or for any decorative 12-24volt application that accepts Equivalent 75/80 Watt incandescent LED bulb with E26 Standard Screw.
- Super bright,Full brightness immediately,longer lifespan,no complaints from flickering or noise, and easy to installation.
- WARNING: Do not install a 12-24 Volt LED light bulb into a standard residential 120 VAC socket as this will cause a short and burn out socket and bulb.
- 12-24 volt for both AC and DC Voltage very safe to use and install, 12W emits as bright as 1050 lumens
- What You Get : 3pcs 12-24 volt led bulb with our worry-free 24-month warranty and friendly customer service

Rochester Sensors

The Ultimate Guide to Float Level Sensors:

Installation Guide to Continuous Level Sensors

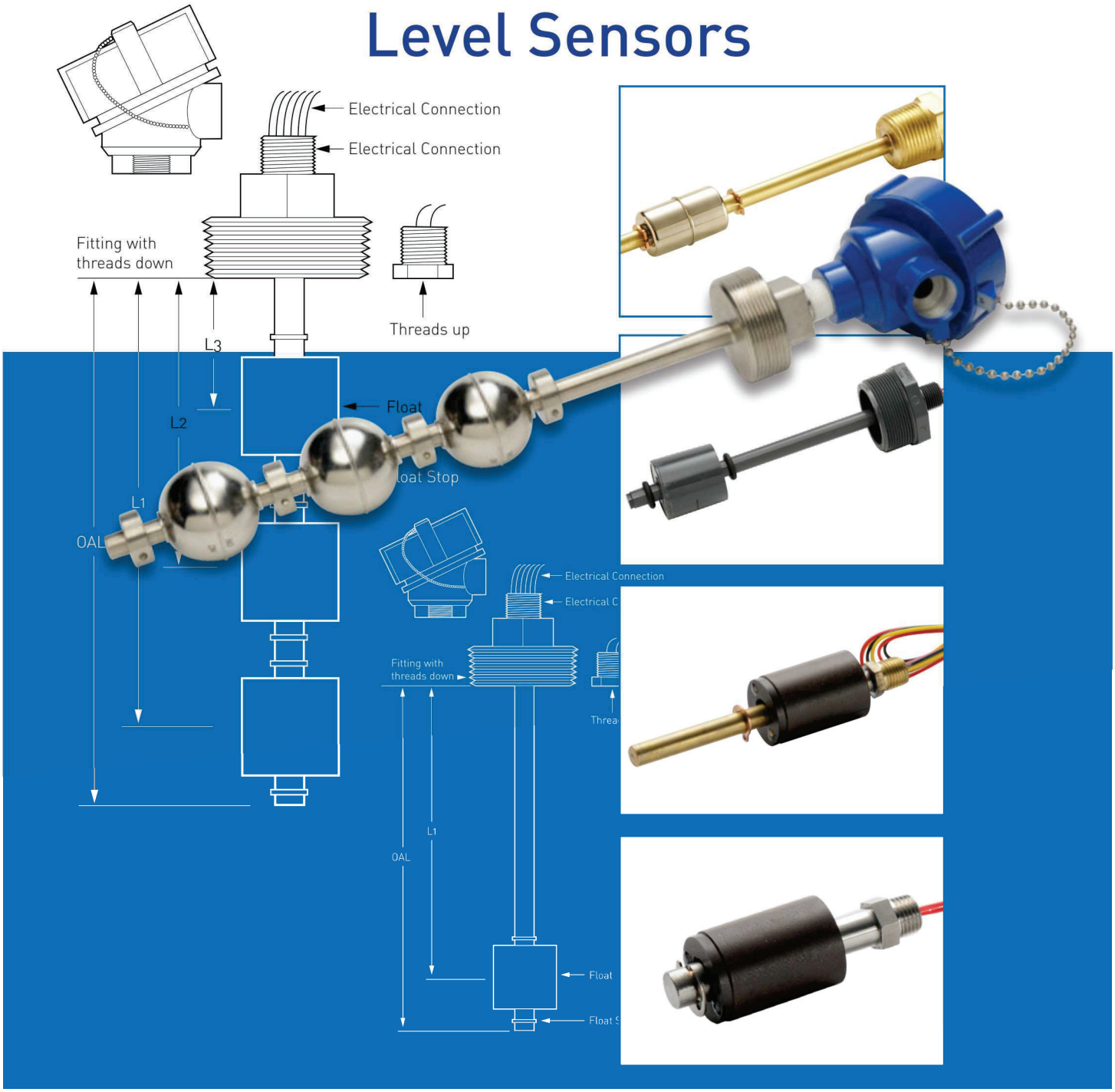

4 20 mA continuous level float sensors

Installation

When initially installing the continuous level sensor, mount the sensor into the tank with the matching fitting. When threading metal threads into a metal coupling, pipe sealant or Teflon tape is recommended. After the sensor is mounted in the tank, add the conduit. Use only appropriate conduit hubs that are specified to maintain the desired UL/CSA rating. For more information see the “Liquid Level Float Sensor Installation Guide” section.

This sensor should be wired by qualified, licensed technicians (CL wiring diagram). The 4-20mA loop powered sensor has two wires exiting the housing of the sensor. The red wire connects to signal (or + VDC), the black wire connects to - VDC. To protect the sensor, we suggest the power supply be wired with a fast blow fuse rated between 30mA and 100mA.

Operation

The 4-20mA sensor operates on a loop power or a separate power supply of 10-30 VDC. The sensor will provide a linear output between 4-20mA across the measuring range. When the float is at the bottom of the measuring range (furthest away from the fitting) the signal output will be 4mA. As the float moves closer to the fitting, the mA output will increase until it reaches the top of the measuring range, providing a 20mA signal. The mA signal will change every 1/4" of float movement. The mA value will change with every 1/4" of float movement. The value of mA change per 1/4" of float movement equals 4 divided by total measuring range in inches.

Our loop powered 4-20mA sensors are reliable and easy to install. These sensors will arrive at your plant, ready to install into your equipment. No calibration is needed. Simply install into your tank and connect the two wires — that’s it. These sensors are tough. They are used in demanding applications with years of reliable, accurate performance. There is no drift and they never need calibration.

CL Wiring Diagram

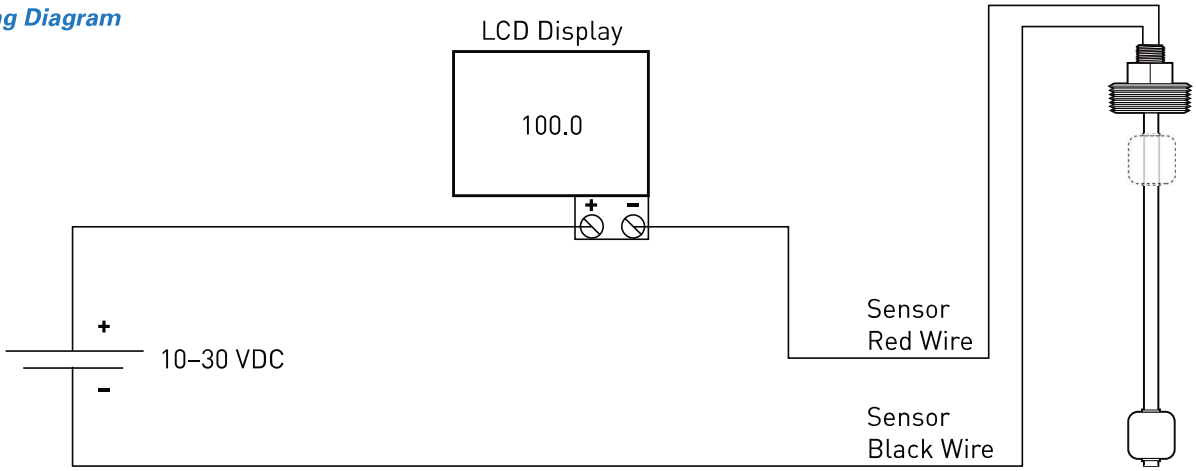

3

DRAWINGS

ESTIMATED WEIGHTS:

TOTAL PACKAGE WEIGHT (DRY): - approx. - 7,500 lbs.
FUEL TANK SIZE (IN GALLONS): - 356 Gal
TOTAL PACKAGE WEIGHT WITH FUEL - approx. - 10,000 lbs.

APPROXIMATE PACKAGE DIMENSIONS:

LENGTH = 193 in
WIDTH = 64 in
HEIGHT = 123 in

SUGGESTED PAD OUTLINE

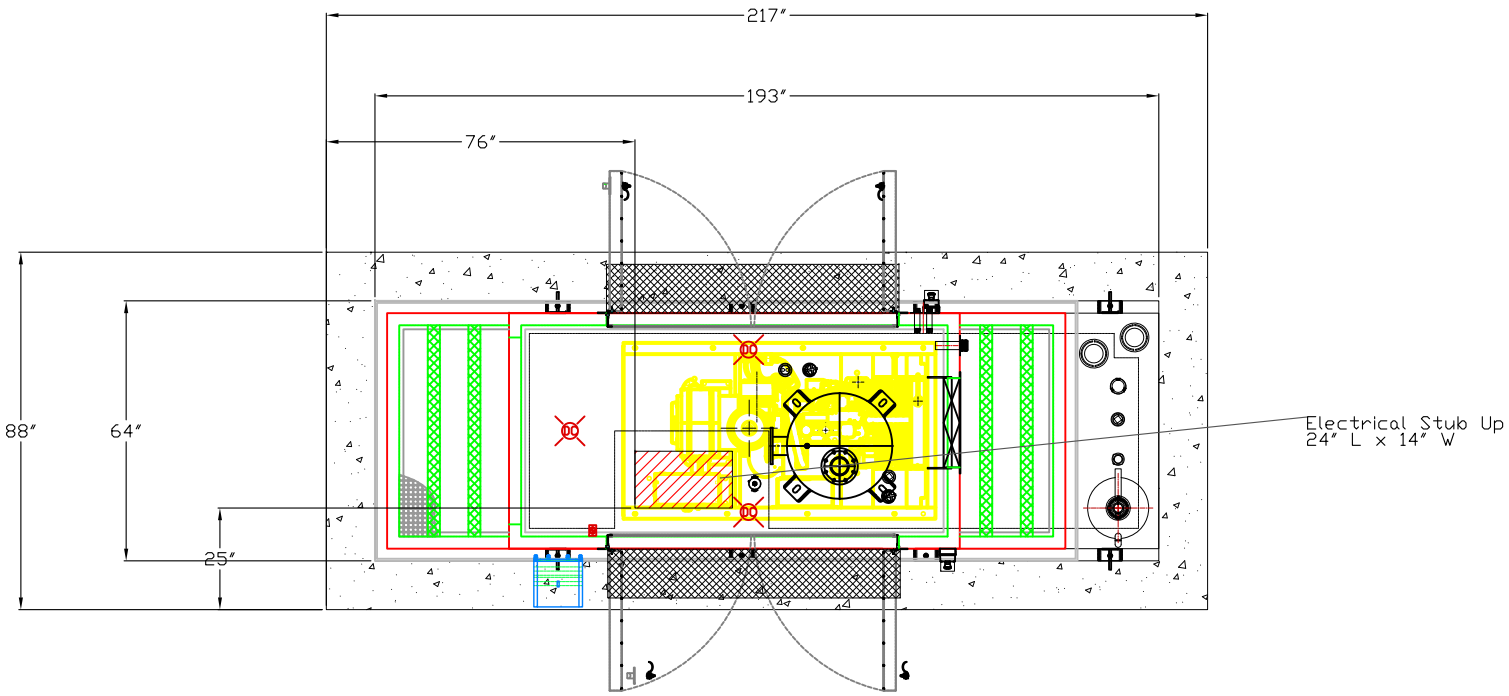

(A) AC LOAD CABLE, AC POWER INPUT AND DC CONTROL WIRING

9"

1. AC POWER AND DC CONTROL WIRING MUST BE RUN IN SEPARATE CONDUIT.
2. ALL CONDUIT SHOULD BE PLACED WELL WITHIN THE STUB-UP ACCESS AREA.
3. THE FOUNDATION SHOULD EXTEND A MINIMUM OF 12 INCHES BEYOND THE BASE.
4. PAD THICKNESS SHOULD BE CALCULATED, DESIGNED, AND CONSTRUCTED ACCORDING TO LOAD REQUIREMENTS AND SOIL CONDITIONS.
5. THE SIDES AND CONTROL PANEL END SHOULD HAVE ADEQUATE CLEARANCE FOR SERVICING AND COOLING AIR. THE RADIATOR END MUST BE FREE OF FLOW RESTRICTIONS.

Ring Power CAT

PROJECT NAME: STORM WATER LAKE ECKLES			
DRAWN BY:	ZMR	REVISION	V4
DATE	6/18/26	REVISION	NONE
SCALE	NONE	PROJECT NO:	251550

CATERPILLAR ENGINE DIVISION
TECHNICAL COMMUNICATIONS GROUP

Installation Drawing Index
AutoCAD 2015 Format

Installation Drawing No. 6101613 chg 01

OPEN WITH SKID BASE

Overall Dimensions:

Length = 1953.00 mm

Width = 1100.00 mm

Height = 1217.10 mm

Engine pricing arrangements found on drawing:

LS4232 chg 00 LS4234 chg 00 LS4235 chg 00

Attachment pricing arrangements found on drawing:

LS4261 chg 00

6101613A.dwf = Summary of LS-4261 Chg 00 shown. (sheet1)

LS4232 chg 00 LS4235 chg 00 LS4261 chg 00

LS4234 chg 00

6101613B.dwf = Top view, Right Side view & Front view of LS-4261 Chg 00 shown. (sheet2)

6101613C.dwf = Left Side view of LS-4261 Chg 00 shown. (sheet3)

METRIC 610-1613

QTY	ENGINE CONNECTIONS	SIZE	SHEETS
1	EXHAUST	ø63.5 [ø2.50] OD	2
1	FUMES DISPOSAL HOSE	ø19.05 [ø0.75] ID	2
1	OIL DRAIN	ø15.88 [ø0.63] ID	2
1	COOLANT DRAIN	1/4-18 NPTF	2,3

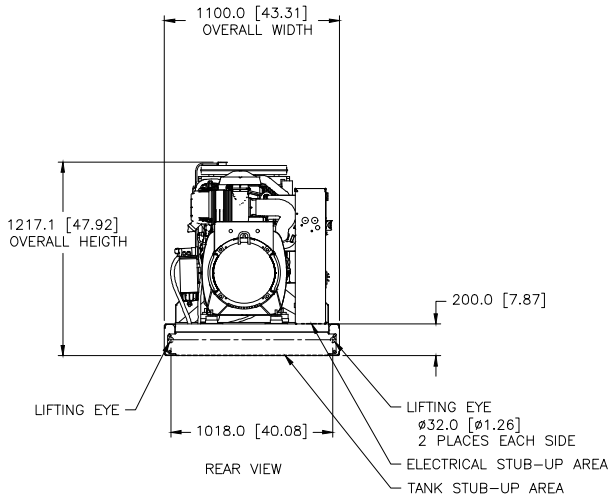

REAR VIEW

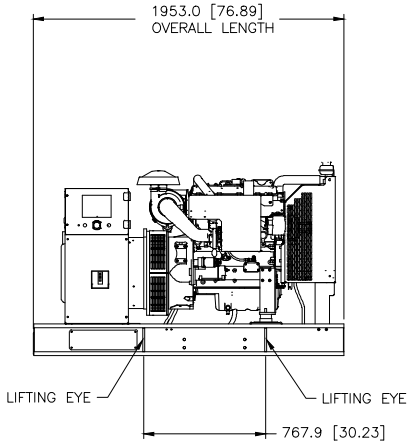

RIGHT SIDE VIEW

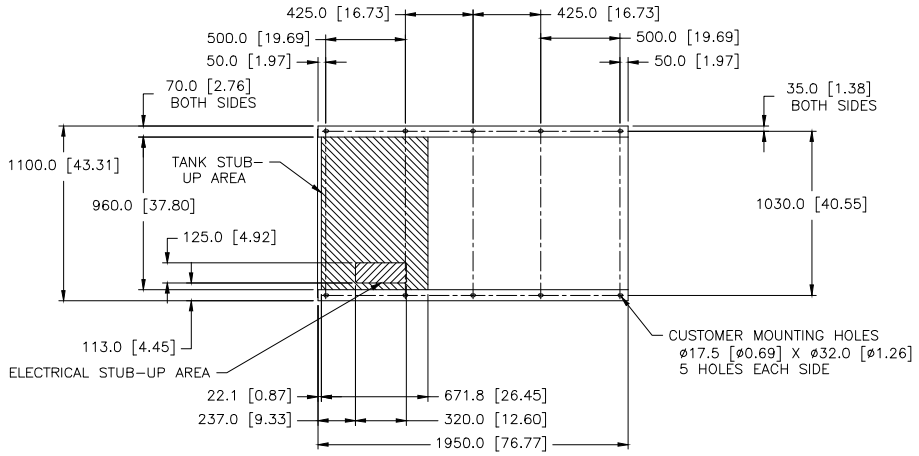

FOOTPRINT
(DIMENSIONED OUTLINE VIEW FROM ABOVE)
(RIGHT SIDE ORIENTATION)

MODEL	TYPE	PRICING AR	SKID BASE
C4.4-1	–	LS-4232 CHG 00	LS-4261 CHG 00
		LS-4234 CHG 00	
		LS-4235 CHG 00	

NOTES: PACKAGE LIFTED IN 4 PLACES ON BASE

PACKAGE SHOWN WITH MORE DETAIL ON FOLLOWING SHEETS

REVISIONS

1E2966B	IDENT
1E2733	DRAWING-AUTOCAD
1E0198W	BRAND MARKINGS
1E0013G	CONFIDENTIALITY
1E0012A	INTERPRETATION
1E0011	INTPR & TOL

SPEC NO. NAME
DRN J.E. NELSON
CHK M.J. SWIFT
APPD N.P. MOUNTJOY
CODE CHP | DRN | PROG
STAGE RECORDS X
UNLESS OTHERWISE SPECIFIED DIMENSIONS ARE IN MM (INCH) DIMENSIONS N/O TOL ARE BASIC
SCALE 1 = 10
SHEET 1 OF 3 FIRST ANGLE PROJECTION CHG 01 29MAR21 DATE

CATERPILLAR INC.

THE INFORMATION HEREON IS THE PROPERTY OF CATERPILLAR INC. AND/OR ITS SUBSIDIARIES AND MAY BE PROTECTED BY PATENTS, COPYRIGHTS, TRADE SECRETS OR OTHER INTELLECTUAL PROPERTY RIGHTS. ALL RIGHTS ARE RESERVED.

INSTALLATION-COMPOSITE
C4.4-1 OPEN W/SKID BASE
610-1613 - DCS 24 SUB 1 WD71 E

METRIC 610-1613

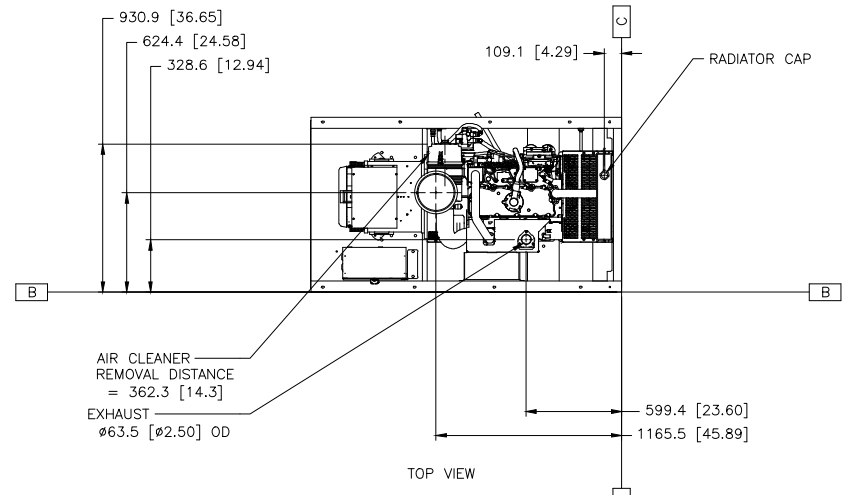

TOP VIEW

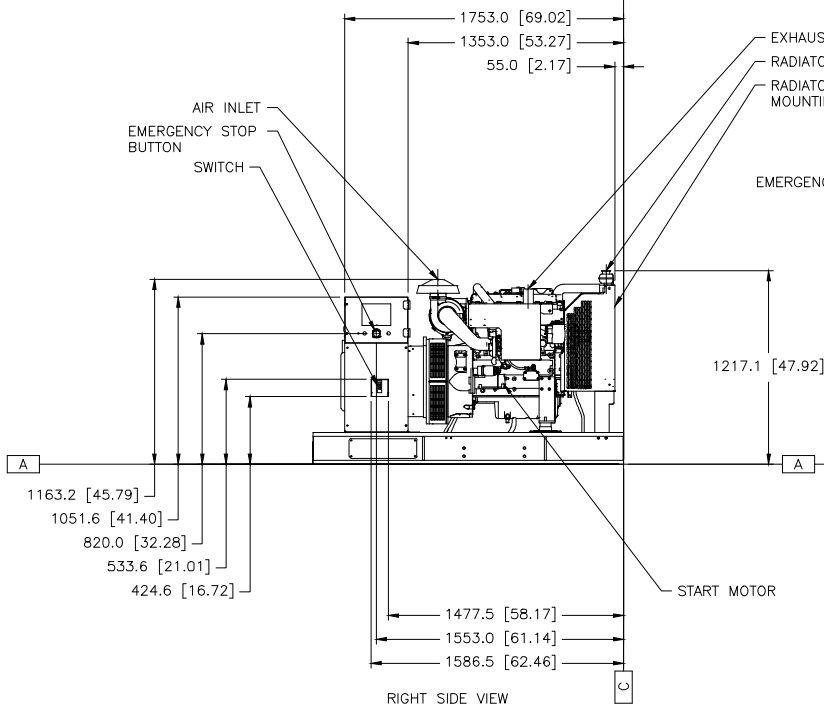

RIGHT SIDE VIEW

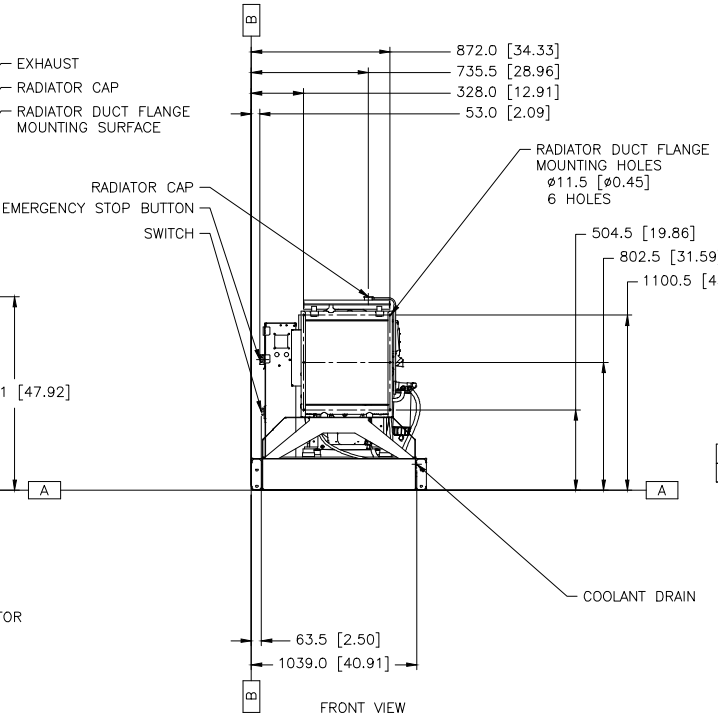

FRONT VIEW

LS-4261 SHOWN

REV	DESCRIPTION
	1E2966B IDENT
	1E2733 DRAWING-AUTOCAD
	1E0195W BRAND MARKINGS
	1E0013G CONFIDENTIALITY
	1E0012A INTERPRETATION
	1E0011 INTPR & TOL

	SPEC NO.	NAME	
DRN		J.E. NELSON	
CHK		M.J. SWIFT	
APPD		N.P. MOUNTJOY	
CODE	CHP	PROG	PROD
STAGE	RECORDS	X	

UNLESS OTHERWISE SPECIFIED DIMENSIONS ARE IN MM (INCH) DIMENSIONS W/O TOL ARE BASIC

SCALE 1 = 10

WEIGHT(KILOGRAMS) 01 29MAR21

SHEET 2 OF 3 | THIRD ANGLE PROJECTION | CHG | DATE

CATERPILLAR INC.

THE INFORMATION HEREON IS THE PROPERTY OF CATERPILLAR INC. AND/OR ITS AFFILIATES AND MAY NOT BE REPRODUCED OR DISCLOSED WITHOUT PRIOR WRITTEN PERMISSION. ALL RIGHTS ARE RESERVED. USE OF THIS DRAWING IS SUBJECT TO THE TERMS OF THE ENGINEERING AGREEMENT.

INSTALLATION-COMPOSITE
C4.4-1 OPEN W/SKID BASE

610-1613 | SIZE - | CODE IDENT 24 | SUBJ | W971 | E

METRIC 610-1613

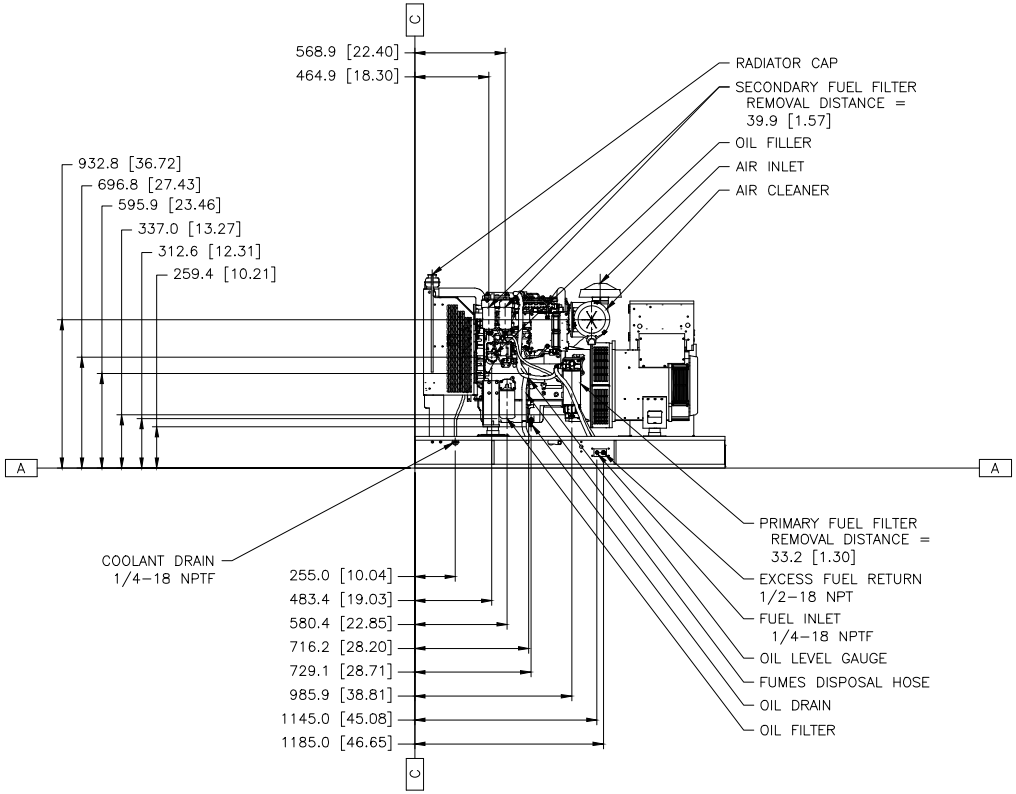

LEFT SIDE VIEW

LS-4261 SHOWN

REV	DESCRIPTION	DATE
	1E2966B IDENT	
	1E2733 DRAWING-AUTOCAD	
	1E0138W BRAND MARKINGS	
	1E0013G CONFIDENTIALITY	
	1E0012A INTERPRETATION	
	1E0011 INTPR & TOL	

	SPEC NO.	NAME		
DRN		J.E. NELSON		
CHK		M.J. SWIFT		
APPD		N.P. MOUNTJOY		
CODE	CHP	PRS	PROS	
STAGE	RECORDS		X	

UNLESS OTHERWISE SPECIFIED
DIMENSIONS ARE IN MM [INCH]
DIMENSIONS W/O TOL ARE BASIC

SCALE 1 = 10

THIRD ANGLE PROJECTION

01 29MAR21

SHEET 3 OF 3 | CHG | DATE

CATERPILLAR INC.

THE INFORMATION HEREON IS THE PROPERTY OF CATERPILLAR INC. AND/OR ITS SUBSIDIARIES AND MAY NOT BE DISCLOSED TO THIRD PARTIES OR REPRODUCED IN WHOLE OR IN PART WITHOUT THE WRITTEN CONSENT OF CATERPILLAR INC.

INSTALLATION-COMPOSITE
C4.4-1 OPEN W/SKID BASE

610-1613 - | USE | GENERAL | DCS 24 | SUB 1 | W971 | E

THIS DIAGRAM IS FOR GC GENSET MODELS (60kW to 200kW)
FOR USE WITH : C4.4 & C7.1 ENGINES
GCCP 1.2 CONTROLLER

SIGNAL NAMES

CIRCUIT_ID	COLOR	DESCRIPTION
0	WH	NEGATIVE_RUN/STOP
101	RD	UNSWITCHED_BTRY.(+)
105	WH	ECM_KEY_SW.(FUSED_25A)
108	WH	BTRY.(+)(FUSED_30A)
18	RD	AVR_X2_TO_GENERATOR_T12
18A	WH	POSITIVE_RUN_STOP
1L	WH	AUX_CONTACT_COMMON
1S	WH	AUX_CONTACT_NC
223	WH	PLC_BTRY.(+)_(FUSED_5A)
4	WH	AUX_CONTACT_NO
4	WH	PMG_A_PHASE_TO_AVR_X2
448	WH	ELR_BTRY.(+)_(FUSED_2A)
5	WH	PMG_B_PHASE_TO_AVR_X1
6	WH	PMG_C_PHASE_TO_AVR_Z2
7A	WH	ENCLOSURE_ESTOP_#11_TO_E-C1_#1
7C	WH	ESTOP_LINK
200	GN-YL	MAIN_CHASSIS_GROUND
208	WH	BTRY.(-)
81	WH	AUX_CONTACT_COMMON
82	WH	AUX_CONTACT_NC
829	WH	GND_FOR_ANALOG_INPUTS
84	WH	AUX_CONTACT_NO
844	WH	MNR_STOP_SW_#22_TO_A-C10_#2
845	WH	A-C10_#1_TO_EMCR_STOP_A_TERMINAL
846	WH	EMCR_STOP_SW_#12_TO_#21
847	WH	EMCR_STOP_SW_#11_TO_CONTROLLER_#3
4	WH	ECM_#18_BTRY.(-)_TO_ECR_#86
5	WH	ENCLOSURE_ESTOP_#23_TO_E-C1_#2
5+	RD	GENERATOR_EXCITER_(+)
5-	BK	GENERATOR_EXCITER_(-)
879	WH	REMOTE_START_CONTROLLER_#42
9	RD	AVR_X1_TO_GENERATOR_T7
90	BK	AUX_CONTACT_COMMON
951	WH	PLC_MODBUS_A_TO_CONTROLLER_#52
951	CU	BATT_CHRG_DSENET_SCR_TO_CONTROLLER_#28
952	BK	PLC_MODBUS_B_TO_CONTROLLER_#51
952	GN	BATT_CHRG_DSENET_B_TO_CONTROLLER_#26
953	CU	PLC_MODBUS_SCR_TO_CONTROLLER_#50
953	YL	BATT_CHRG_DSENET_A_TO_CONTROLLER_#27
954	WH	ANNUNCIATOR_MODBUS_A
955	BK	ANNUNCIATOR_MODBUS_B
956	CU	ANNUNCIATOR_MODBUS_SCR
96	BK	AUX_CONTACT_NC
98	BK	AUX_CONTACT_NO
N309	WH	AHR_BAT_TO_CONTROLLER_#8
N466	WH	ELR_#14_TO_ENC_LIGHT_EL-C1_#1
AC100	WH	120VAC_(FUSED_20A)_TO_GFCI_#LINE
AC100	WH	120VAC_(FUSED_10A)_TO_BATT_CHRG_#L
AC199	WH	SHORE_POWER_NEUTRAL
AC119	WH	120VAC_(FUSED_5A)_TO_AHR_#12
C1	WH	SHUNT TRIP
C2	WH	SHUNT TRIP
D POS	WH	CHARGER_ALTERNATOR_EXCITATION
E486	WH	SENSING_V.-_PHASE_A
E487	WH	SENSING_V.-_PHASE_B
E488	WH	SENSING_V.-_PHASE_C
E494	WH	CT_V.-_PHASE_A
E495	WH	CT_V.-_PHASE_B
E496	WH	CT_V.-_PHASE_C
E498	WH	CT_RTN_COMMON
E499	WH	SENSING_V._NEUTRAL
E434	WH	GEN_PHASE_A
E435	WH	GEN_PHASE_B
E436	WH	GEN_PHASE_C
F5	WH	AVR_BF-
F6	WH	AVR+BF+
L1	BK	GENERATOR_L1_PHASE
L2	BK	GENERATOR_L2_PHASE
L3	BK	GENERATOR_L3_PHASE
LINK	WH	ENCLOSURE_ESTOP_LINK
N	BK	GENERATOR_NEUTRAL
N756	WH	ALM_HORN_(+)
P733	WH	ANLG_INP_1_(+)
P958	WH	DISCRETE_OUT_9
P959	WH	DISCRETE_OUT_10
U	RD	AVR_SENSING
V	RD	AVR_SENSING
W	RD	AVR_SENSING
WDFR	WH	WATER_IN_FUEL_RETURN
WIFS	WH	WATER_IN_FUEL_SWITCH
X861	WH	ECR_#87_STARTER_MAG_SW
Y797	WH	ENG_J1939_DATALINK_+
Y798	BK	ENG_J1939_DATALINK_-
Y799	CU	ENG_J1939_DATALINK_SHLD
Y983	WH	LOW_COOLANT_LEVEL_TO_CNTRL_#43
Y984	WH	FUEL_LEVEL_TO_CNTRL_#44
Y985	WH	ENCLOSURE_LIGHT_SW_TO_CNTRL_#46
YGN	GN/YL	GENERATOR_GND

WIRE NAME DEFINITION

XXXX-XX# XX-XX

- WIRE GAUGE
- WIRE COLOUR
- WIRE NUMBER
- HARNESS IDENT
- CIRCUIT IDENT

COLOUR ABBREVIATIONS

ABBREVIATION	DESCRIPTION
RD	RED
WH	WHITE
OR	ORANGE
YL	YELLOW
PK	PINK
BK	BLACK
GY	GREY
PU	PURPLE
BR	BROWN
GN	GREEN
BU	BLUE
CU	COPPER
GN-YL	GREEN-YELLOW

ABBREVIATIONS

ABBREVIATIONS	DESCRIPTION
AC	ALTERNATING CURRENT
AHR	ALTERNATOR HEATER RELAY
AVR	AUTOMATIC VOLTAGE REGULATOR
BATT	BATTERY
CR	CONTROL RELAY
DC	DIRECT CURRENT
ECM	ENGINE CONTROL MODULE
ECR	ENGINE CRANK RELAY
ELR	ENCLOSURE LIGHTS RELAY
E-STOP	EMERGENCY STOP
FCR	FUEL CONTROL RELAY
FLS	FUEL LEVEL SENDER
GFR	GENERAL FAULT RELAY
GND	GROUND
GRR	GENERATOR RUNNING RELAY
LCL	LOW COOLANT LEVEL
MCB	MINIATURE CIRCUIT BREAKER
OF	AUXILIAR SWITCH
PMG	PERMANENT MAGNET GENERATOR
O/1	AUXILIAR SWITCH
SD	ALARM SWITCH
STR	SHUNT TRIP RELAY
SY	ALARM SWITCH
TERM	PANEL TERMINAL
VFC	VOLT FREE CONTACT

SYMBOL LEGEND TABLE

	MINIATURE CIRCUIT BREAKER
	EMERGENCY STOP PUSHBUTTON
	FUSED AUTOMOTIVE RELAY
	RESISTOR
	EARTH/GROUND
	CURRENT TRANSFORMER
X	PANEL TERMINAL
	TERMINAL
	CONNECTOR
	BATTERY
	SPLICE
	WIRE
	SCREEN CABLE
A	FUSE

INDEX TABLE

SHEET INDEX	DESCRIPTION
1	CROSS REFERENCE SHEET INDEX. NOTES
2	CONTROL SCHEMATIC
3	POWER SCHEMATIC
4	POWER SCHEMATIC (SINGLE PHASE)
5	ADDITIONAL OPTIONS
6	AC OPTIONS
7	ADDITIONAL INFORMATION

HARNESS LAYER TABLE

IDENT	PART ND	CHG	LOC	DESCRIPTION	NOTE
HARNESS AS.	-	-	-	-	
A	596-2201	D1	SH2	D125-D200 MAIN HARNESS	-
A	598-3162	D1	SH2	D60-D100 MAIN HARNESS	-
AN	578-6063	D1	SH5	ANNUNCIATOR HARNESS	-
AX	565-9586	D0	SH5	AUX CONTACTS AND SHUNT TRIP	-
B	577-8429	D1	SH5	PLG 641&601 MODBUS HARNESS	-
C	396-1978	D0	SH2	E-STOP LINK (OPEN SET)	-
CD	605-2916	D0	SH6	GFCI HARNESS	-
E	596-1928	D3	SH2	E-STOP HARNESS (ENCLOSED SET)	-
EL	605-8468	D0	SH5	ENCLOSURE LIGHTS HARNESS	-
ER	604-4015	D0	SH6	BATTERY-CHARGER HARNESS	-
FR	605-8326	D0	SH6	SHORE POWER L1 LINK	-
GR	605-3114	D0	SH5	GENSET RUNNING & COMMON ALARM	-
PG	443-0637	D1	SH3	PMG ADAPTOR HARNESS	
PM	604-4018	D0	SH3	PMG ADAPTOR HARNESS	
RC	604-4020	D0	SH6	ALTERNATOR SPACE HEATER HARNESS	-
T	577-3930	D1	SH5	PLG 641&601 POWER SUPPLY	-
Y	586-4861	D0	SH5	PLG 641&601 CAN HARNESS	-
					-
WIRE AS./CABLE AS.	-	-	-	-	-
N	-	-	SH2	BATTERY NEGATIVE	-
P	-	-	SH2	BATTERY POSITIVE	-

NOTE A: FACTORY WIRING NOT PROVIDED AS STANDARD. REFER TO MANUFACTURER INSTALLATION INSTRUCTIONS.

NOTE B: RESISTOR TO BE REMOVED IF ADDITIONAL EXPANSION MODULES ARE CONNECTED.

CONTROL SCHEMATIC

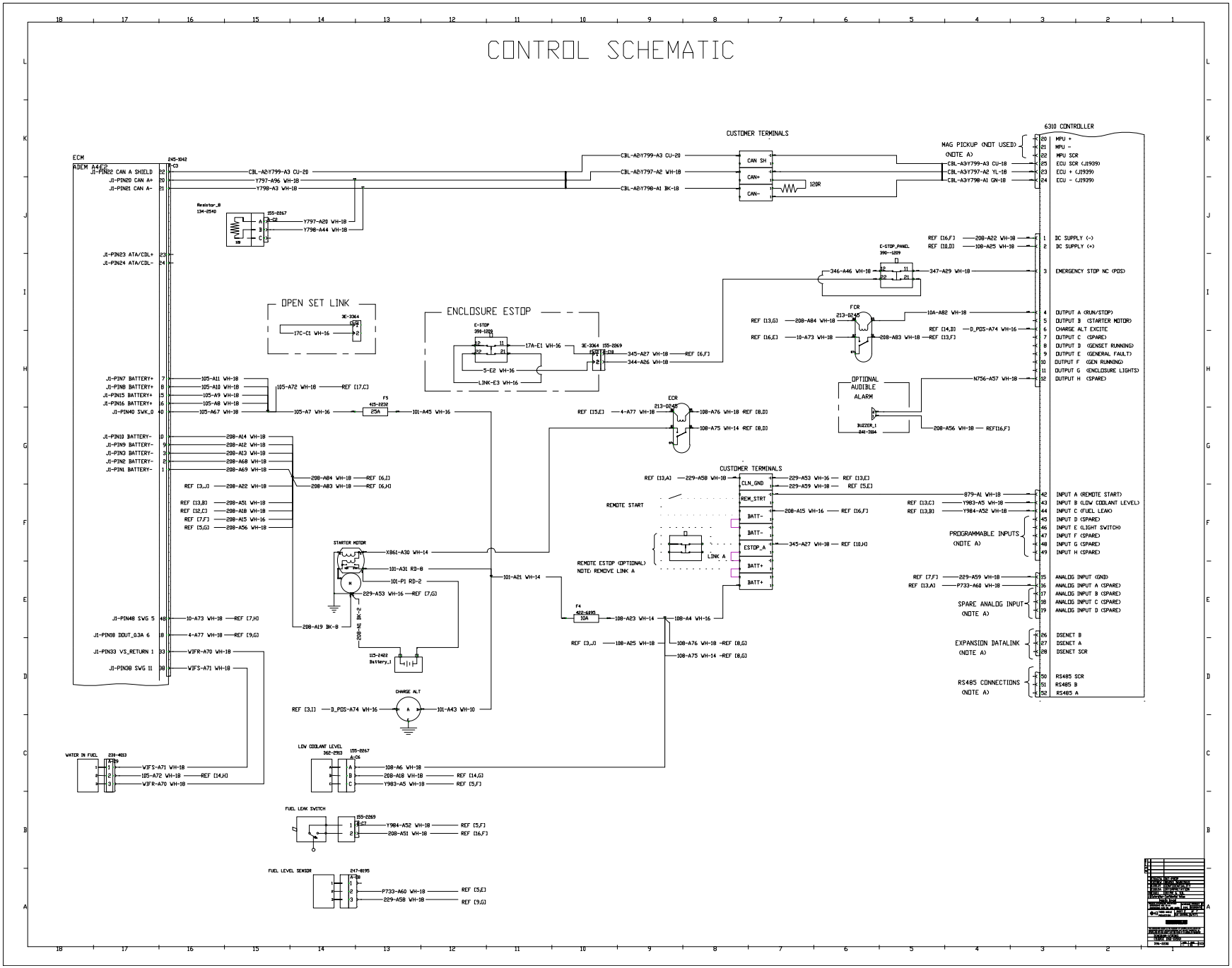

POWER SCHEMATIC

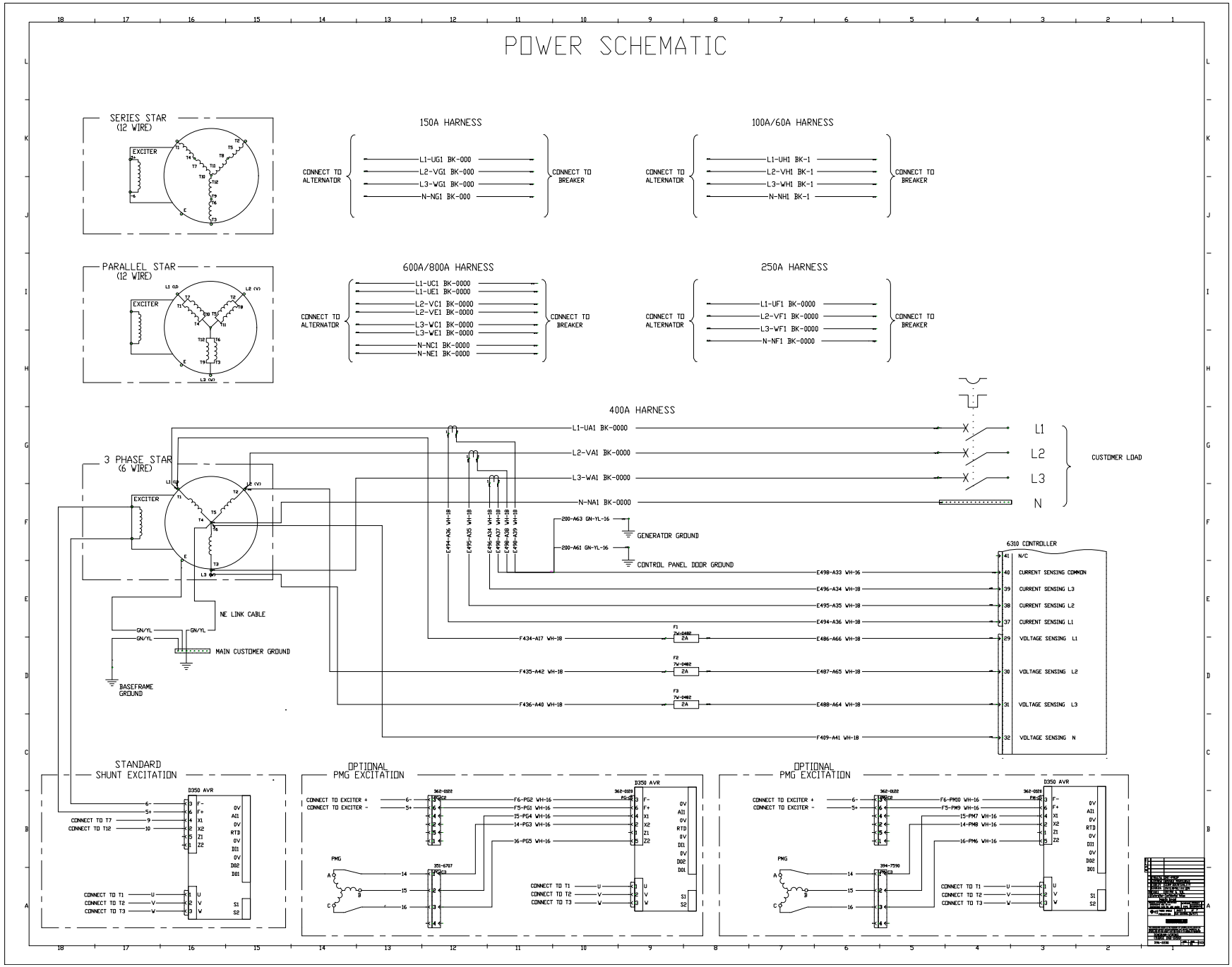

POWER SCHEMATIC (SINGLE PHASE)

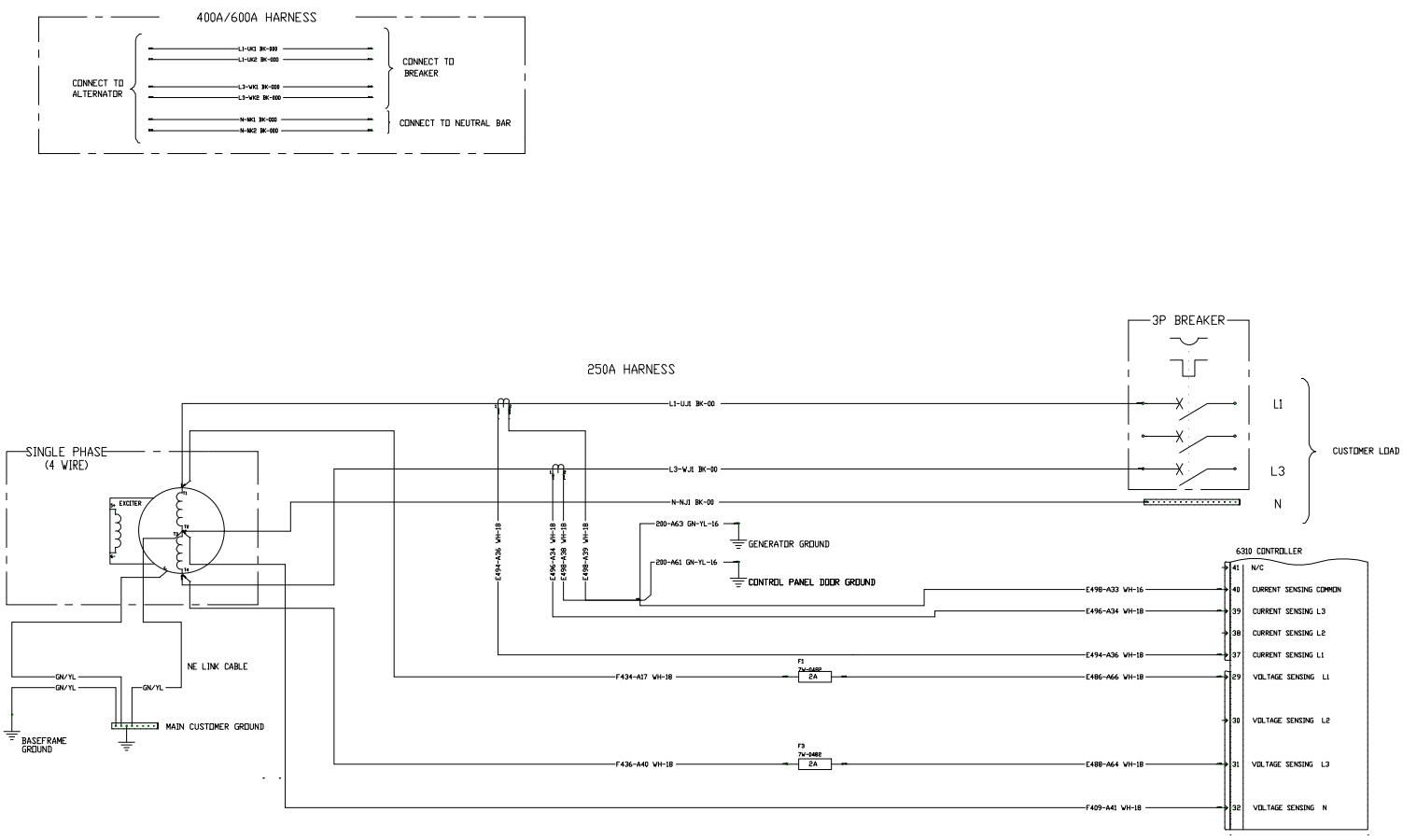

ADDITIONAL OPTIONS

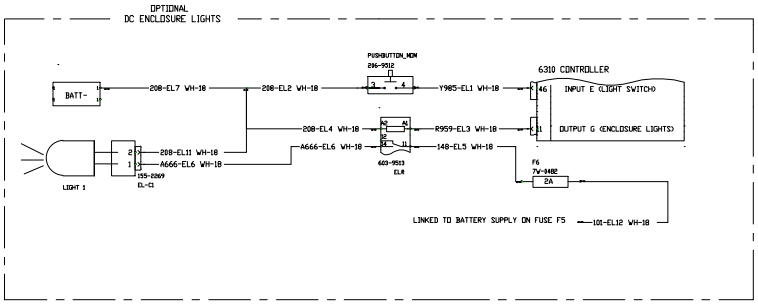

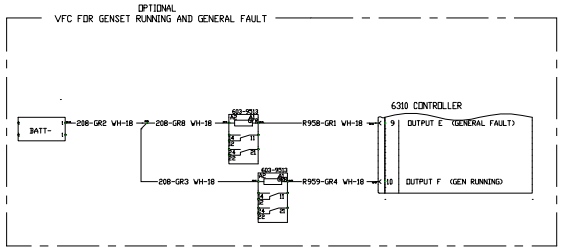

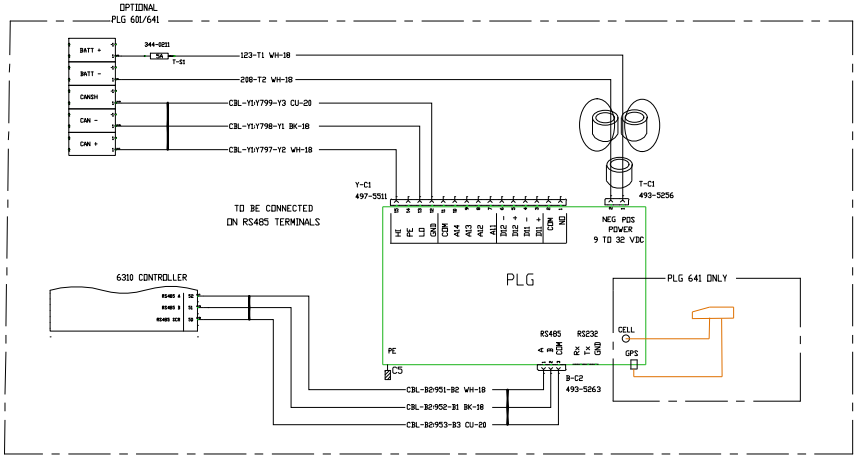

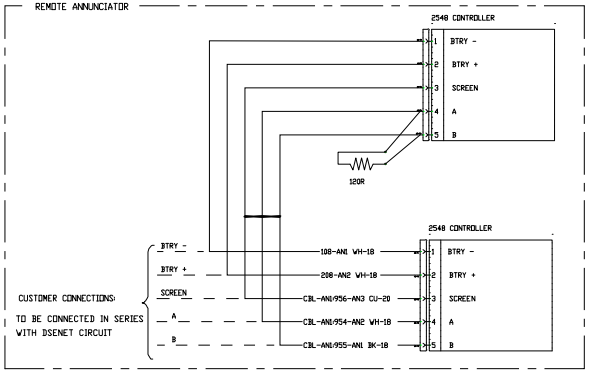

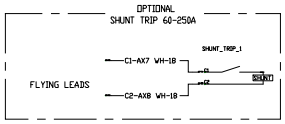

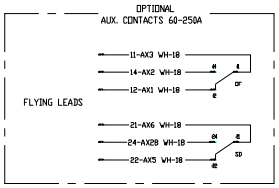

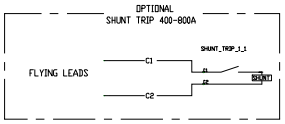

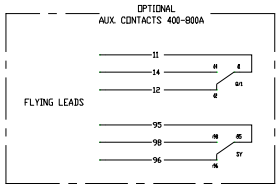

AC OPTIONS

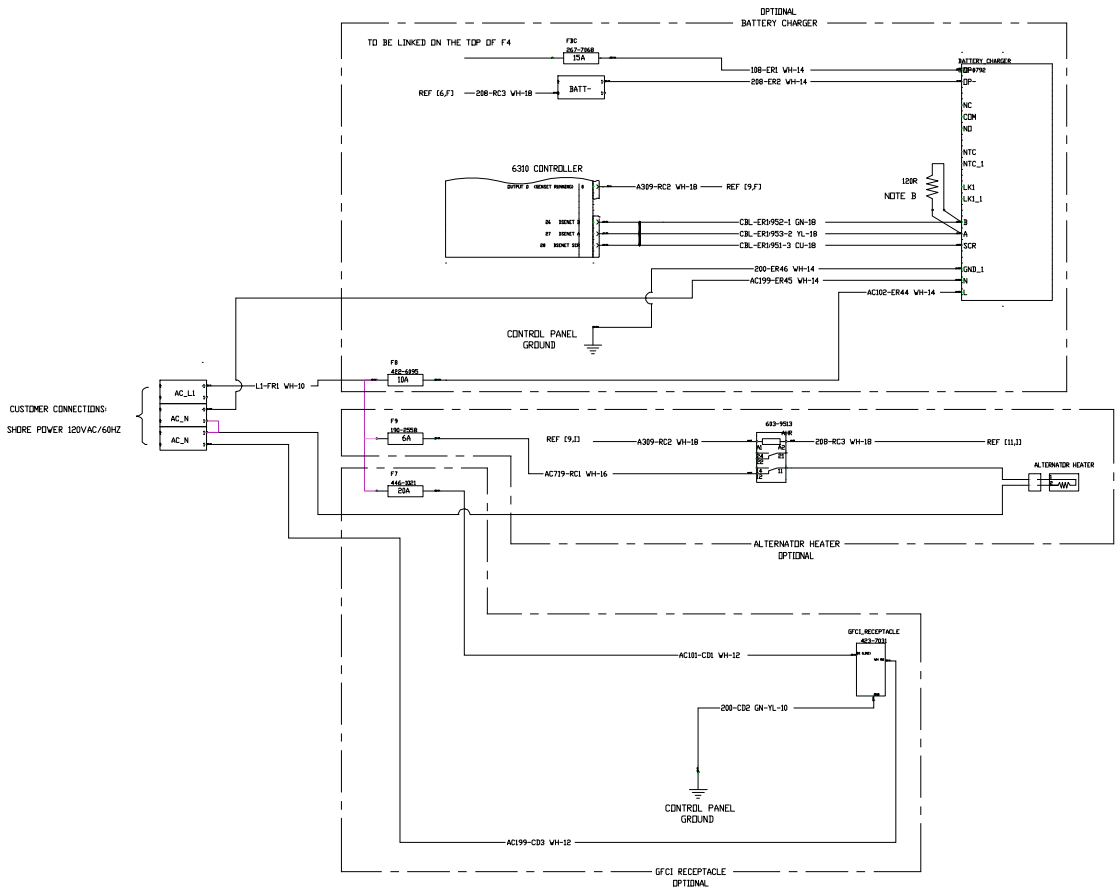
OPTIONAL
BATTERY CHARGER
TO BE LINKED ON THE TOP OF F4
F3C
267-7068
15A
BATT-
REF [6,F]
208-RC3 WH-18
108-ER1 WH-14
208-ER2 WH-14
BATTERY CHARGER
DP+
DP-
NC
COM
NO
NTC
NTC_1
LK1
LK1_1
B
A
SCR
GND_1
N
L
6310 CONTROLLER
A309-RC2 WH-18
REF [9,F]
120R
NOTE B
CBL-ER1952-1 GN-18
CBL-ER1953-2 YL-18
CBL-ER1951-3 CU-18
200-ER46 WH-14
AC199-ER45 WH-14
AC102-ER44 WH-14
CONTROL PANEL
GROUND
F8
412-6895
10A
L1-FR1 WH-10
CUSTOMER CONNECTIONS:
SHORE POWER 120VAC/60HZ
AC_L1
AC_N
AC_N
F9
196-2958
6A
REF [9,I]
A309-RC2 WH-18
643-1913
208-RC3 WH-18
REF [11,I]
F7
446-3321
20A
AC719-RC1 WH-16
ALTERNATOR HEATER
ALTERNATOR HEATER
OPTIONAL
GFCI_RECEPTACLE
423-7033
AC101-CD1 WH-12
200-CD2 GN-YL-10
CONTROL PANEL
GROUND
AC199-CD3 WH-12
GFCI RECEPTACLE
OPTIONAL

ADDITIONAL INFORMATION - COMPONENT DETAILS & CUSTOMER CONNECTIONS

MAIN CUSTOMER RAIL
(OPTIONS INCLUDED)

COMPONENT	DESCRIPTION
AHR	ALTERNATOR SPACE HEATER RELAY
F7	GFCI FUSE (20A)
F8	BATTERY CHARGER FUSE (10A)
F9	ALTERNATOR HEATER FUSE (6A)

FUSE ID	CURRENT RATING	WIRE ID	DESCRIPTION
F4	10A	101; 108	PANEL SUPPLY
FBC	15A	101; 108	BATTERY CHARGER
F5	25A	101; 105	ECM POWER
F6	2A	148; 101	ENCLOSURE LIGHTS

RAIL	CURRENT RATING	DESCRIPTION
GFR	8A	GENERAL FAULT RELAY
GRR	8A	GENSET RUNNING RELAY
ELR	8A	ENCLOSURE LIGHTS RELAY

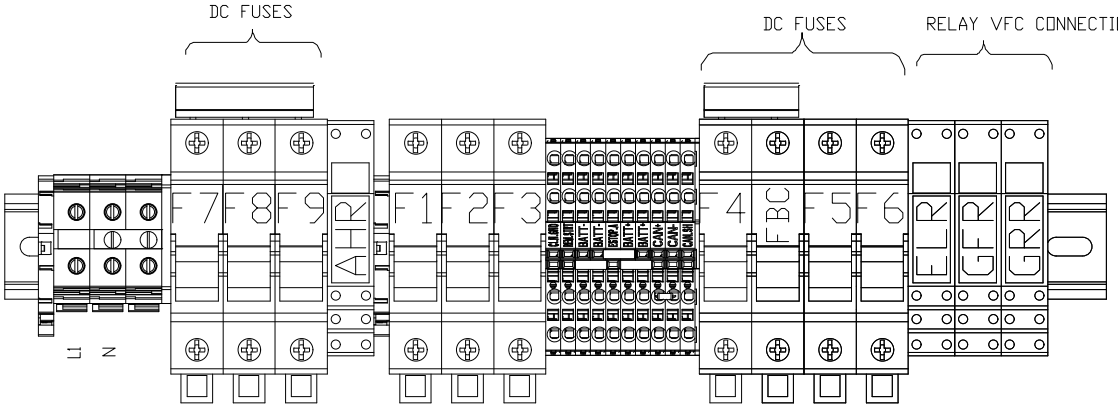

COMPONENT	DESCRIPTION
L1	SHORE POWER AC SUPPLY LINE
N	SHORE POWER AC SUPPLY NEUTRAL

FUSE ID	CURRENT RATING	WIRE ID	DESCRIPTION
F1	2A	F434; E486	L1 SENSING AC
F2	2A	F435; E487	L2 SENSING AC
F3	2A	F436; E488	L3 SENSING AC

TERMINAL ID	WIRE ID	DESCRIPTION
CLN_GND	229	CLEAN GROUND FOR ANALOG INPUTS
REM_STRT	879	REMOTE START INPUT
BATT-	E08	BATTERY NEGATIVE
BATT-	E08	BATTERY NEGATIVE
ESTOP_A	645	GENSET CONTROLLER ESTOP INPUT
BATT+	108	BATTERY POSITIVE (10A FUSED)
BATT+	108	BATTERY POSITIVE (10A FUSED)
CAN+	Y797	CAN + COMMS
CAN-	Y798	CAN - COMMS
CAN_SH	Y799	CAN SH COMMS

PHOENIX PRODUCTS
JACKSONVILLE, FL

phoenix products

DRAWINGS PREPARED FOR:
RING POWER
CITY OF TAMPA STORM WATER LAKE ECKLES
GSDW-350 W/60KW & A-SAEST
JOB # 25-519309 DATE: 02.11.2026

SITE INSTALLED ITEMS LIST

THE ITEMS LISTED BELOW ARE SITE INSTALLED BY OTHERS SUBJECT TO LOCAL JURISDICTION APPROVAL.

1. SUB-BASE FUEL TANK FOUNDATION CONNECTIONS
2. ELECTRICAL CONNECTIONS (IF REQUIRED)

DRAWING SET OUTLINE:

SHEET C1: COVER SHEET

SHEET BOM: BILL OF MATERIALS

SHEET S1: PLAN & ELEVATIONS – TANK & GENSET

SHEET S2: PLAN & ELEVATIONS – TANK, GENSET, & ENCLOSURE

NOTES:

GENSET: CATERPILLAR 60KW C4.4 GCABR
WEIGHT: 2,054 LBS. (DRY)
DIMENSIONS: 77.2"L X 43.3"W X 48"H
DRAWING NUMBER: 6101613

1. REQUIRED AIR FLOW: 3,950 CFM
2. ENCLOSURE WALLS: .080" X 3" DEEP ALUMINUM PANEL
3. ENCLOSURE ROOF: .080" ALUMINUM
4. ENCLOSURE DIMENSIONS: SEE SHEET S2
5. ENCLOSURE WEIGHT (APPROX.): 2,223.73 LBS.
6. ENCLOSURE COLOR: POLAR WHITE
7. INTERIOR LINING: MILL FINISH PERFORATED ALUMINUM
8. SOUND ATTENUATION LEVEL: 35 dB(A) REDUCTION @ 1 METER
9. SOUND ATTENUATION MATERIAL: 2" FIBERGLASS ACOUSTICAL INSULATION & 1-1/2" SOUND FOAM WITH BARRIER
10. ENCLOSURE SHALL BE PROVIDED W/ 4-POINT LIFTING LUGS
11. TOTAL PACKAGE DRY WEIGHT (APPROX.): 7,440.73 LBS.
12. DESIGN AIR FLOW: 3,950 CFM @ 909.54 FPM

TANK INFORMATION

EMERGENCY VENTING CAPACITY:	90,560-4"	CFH
TANK MODEL:	GSDW-350	
TANK CAPACITY:	356.12	GALLONS
TANK WEIGHT:	3,163	LBS.
PRIMARY TANK DIMENSIONS:		
LENGTH:	150	INCHES
WIDTH:	48	INCHES
HEIGHT:	13	INCHES
SECONDARY TANK DIMENSIONS:		
LENGTH:	160	INCHES
WIDTH:	58	INCHES
HEIGHT:	15	INCHES
TANK TOP LOAD RATING	60,900	LBS

SHIPS WITH VACUUM IN INTERSTITIAL FOR ON-SITE INTEGRITY VERIFICATION

ALL FITTINGS TO BE C.S. WELD FLANGES. (UNLESS OTHERWISE NOTED)

BUILDING & INSPECTION REQUIREMENTS	
ENCLOSURE DESIGNED TO MEET ASCE 7-22 & 8TH EDITION (2023) FLORIDA BUILDING CODE W/ SUPPLEMENTS	
NAME OF THIRD PARTY AGENCY	HWC – HILBORN, WERNER, CARTER & ASSOCIATES, INC.
MFG. CERT. #	MFT8362
CONSTRUCTION TYPE DEFINED IN CH 6 OF THE FBC	II-B
OCCUPANCY USE CLASSIFICATION IAW CH 3 OF THE FBC	UTILITY – MISC.
FIRE RATING OF EXTERIOR WALLS	0 HRS
FIRE SUPPRESION SYSTEM	NO
DESIGNED FOR HURRICANE SHELTER	NO
ALLOWABLE NUMBER OF STORIES	1
NUMBER OF MODULES	1
PE CERTIFICATION REQUIRED	NO
FLORIDA DEPARTMENT OF BUSINESS & PROFESSIONAL REGULATION INSIGNIA REQUIRED.	NO
LMI CONSTRUCTION	NO
APPROVED FOR INSTALLATION IN HVHZ	NO
UL2200	NO
ROOF LIVE/DEAD LOADS	20 PSF OR 300 LBS / 5 PSF
WIND VELOCITY RATING	150 MPH
EXPOSURE CATEGORY	C
RISK CATEGORY	IV
"R" RATING OF FLOOR/WALL/ROOF	0\14.1\7.7
BUILDING SQUARE FOOTAGE	~ 85.7 SQ. FT.

LIMITATIONS OF THE PLAN APPROVAL BY THE AGENCY: APPROVAL COVERS FACTORY-BUILT STRUCTURE ONLY. ANY ALTERATIONS TO FACTORY-BUILT STRUCTURE ON SITE VOIDS STATE APPROVAL. ITEMS INSTALLED AT THE SITE ARE SUBJECT TO REVIEW, APPROVAL, & INSPECTION BY THE LOCAL AUTHORITY HAVING JURISDICTION. THE CHAPTER 633 PLAN REVIEW & INSPECTION SHALL BE CONDUCTED BY THE LOCAL FIRE INSPECTOR. SIGNED AND SEALED PLANS SHALL BE ON FILE WITH HWC.

CUSTOMER FURNISHED & PHOENIX PRODUCTS INSTALLED:

1) GENSET

REV#	DESCRIPTION	BY	DATE:
A	SUBMITTED FOR CUSTOMER APPROVAL	AVB	02.11.26
B	REVISED PER CUSTOMER REQUEST 4/7/2026	AVB	04.17.26
C	REMADE TO REV A AND MOVED MPU TO EXTERNAL WALL	AVB	06.1.26
D	MOVED MPU TO EXTERNAL WALL, REMOVED STAND.	AVB	06.17.26

CUSTOMER / PROJECT TYPE: GSDW-350 W/60KW A-SAEST
TANK LABEL: ■ UL-142 □ UL-2085
F.D.E.P. CERTIFICATION NOS. □ EQ-013 ■ EQ-625 □ EQ-821
RING POWER

JOB# 25-519309
DRAWN BY: AVB
CHECKED BY: AM
DATE: 01.19.26
SCALE: N.T.S.

PHOENIX PRODUCTS
1444 EAST 8TH STREET
JACKSONVILLE, FLORIDA 32206
CITY OF TAMPA STORM WTR LAKE ECKLES

COPYRIGHT © 2026 PHOENIX PRODUCTS, ALL RIGHTS RESERVED.

Phoenix Products

C1

COPYRIGHT © PHOENIX PRODUCTS, 2014. ALL RIGHTS RESERVED

B.O.M.

ITEM	QTY	DESCRIPTION	VENDOR	MODEL NUMBER	SKETCH NUMBER	DBS PART NUMBER	NOTE
1	1	350 GALLON SUB-BASE FUEL TANK	PHOENIX PRODUCTS	GSDW-350			
2	1	DW 2" F.O.S.R. ASSEMBLY	PHOENIX PRODUCTS		DW-FOSR		SUCTION TUBE LENGTH = 12"
3	1	SPARE 2" ASSEMBLY	PHOENIX PRODUCTS		DW-S-2		
4	1	DW PRIMARY EMERGENCY VENT 4" - PIPE ASSEMBLY	MORRISON	245-0400AV	DW-EV-4P	6305001400	
5	1	DW SECONDARY EMERGENCY VENT 4" - PIPE ASSEMBLY	MORRISON	245-0400AV	DW-EV-4P	6305001400	SHIP VENT CAP LOOSE
6	1	4" PVC THREADED CAP (FOR SHIPPING W/ VACUUM)	PHOENIX PRODUCTS				
7	1	GSDW PRIMARY VENT 2" ASSEMBLY	MORRISON	354-0200AV	GSDW-PV-2		RISER PIPE LENGTH=18" (T.O.E.)
8	1	SPARE 4" ASSEMBLY	PHOENIX PRODUCTS		DW-S-4		
9	1	DW VISUAL GAUGE ROCHESTER ASSEMBLY	ROCHESTER	6580-00151	DW-VGR		INNER TANK HEIGHT = 13". RISER=1/4"
10	1	7.5 GAL. SPILL BUCKET ASSEMBLY	MORRISON	518CC-0100AC, 179	DW-SB7-WF		
11	1	2" C.S. WELD FLANGE FOR CONTINUOUS LEVEL PROBE	PHOENIX PRODUCTS	FLNG WELD 2"		6903002000	BR02B01 (SCH40 FOR ALL PIPES AND FITTINGS)
12	1	4-20mA CONTINUOUS LEVEL PROBE	FPI SENSORS	SEE ELECTRICAL BOM			SEE ELECTRICAL FOR WIRING DETAILS
13	1	DW LS1001 DUAL LEVEL HIGH/LOW SWITCH LOW ASSEMBLY (90% HIGH SET POINT-25% LOW SET POINT)	FPI SENSORS	LS1001-PHXP	DW-FPIDL-2WF		
14	1	DW LS1001 INTERSTITIAL LEAK PROBE ASSEMBLY	FPI SENSORS	LS1001-PHXP	DW-FPILK-2WF		SHIP PROBE LOOSE
15	1	DW VACUUM GAUGE WITH WELD FLANGE ASSEMBLY	ASHCROFT, MORRISON	25-1490-A-02L-XTU-200/OIWV, 691B-0300 1V	DW-VCG-2WF		
16	1	24"W. X 14"L. ELECTRICAL STUB UP	PHOENIX PRODUCTS				
17	1	60KW GENERATOR	CATERPILLAR	C4.4 GCABR			DEALER FURNISHED
18	2	6"W X 77"L NEOPRENE PAD	PHOENIX PRODUCTS	NEOPRENE 1/4TX6"W		9909000050	
19	4	D-RING LIFT LUG ASSEMBLY	PHOENIX PRODUCTS		LLD		20,000 LBS VERTICAL LIFT ONLY
20	4	6"W X 4" X 64"L EXTERNAL TANK SUPPORT	PHOENIX PRODUCTS				
21	4	6"W X 64"L NEOPRENE PAD	PHOENIX PRODUCTS	NEOPRENE 1/4TX6"W		9909000050	SHIP LOOSE (FIELD INSTALLED UNDER EACH TANK SUPPORT)
22	1	ALUMINUM SOUND ATTENUATED SKIN-TIGHT ENCLOSURE	PHOENIX PRODUCTS	A-SAEST			
23	1	INTAKE HOOD W/ SOUND BAFFLES & ALUMINUM BIRDSCREEN	PHOENIX PRODUCTS				
24	2	INTAKE SOUND BAFFLE	PHOENIX PRODUCTS				
25	3	DC LIGHTS	SEE ELECTRICAL BOM				SEE ELECTRICAL PACKAGE FOR DETAILS
26	2	72"W. X 64"H. DOUBLE DOOR W/3 POINT S.S. PADLOCKABLE HANDLE	PHOENIX PRODUCTS				1 MASTER LEFT HAND/1 MASTER RIGHT HAND REQ,D. WITH 90 DEG . DOOR STOPS
27	2	12"W X 72"L ALUMINUM BOLT-ON STEP	PHOENIX PRODUCTS				
28	1	S.S. COOLANT/OIL DRAIN CONNECTION PLATE	PHOENIX PRODUCTS				SIZE & LOCATE AS NEEDED AT TIME OF BUILD
29	2	EMERGENCY STOP ASSEMBLY	SEE ELECTRICAL BOM				SEE ELECTRICAL DRAWINGS FOR DETAILS
30	1	S.S. FUMES DISCONNECT PLATE	PHOENIX PRODUCTS				SIZE & LOCATE AS NEEDED AT TIME OF BUILD
31	1	DISCHARGE HOOD W/ SOUND BAFFLES & ALUMINUM BIRDSCREEN	PHOENIX PRODUCTS				
32	2	DISCHARGE SOUND BAFFLES	PHOENIX PRODUCTS				
33	1	22"W. X 24"H. GRAVITY DAMPER	GREENHECK OR EQUIV.	EM-31			W/COUNTERBALANCE WEIGHTS & OPTIONAL FLANGES
34	1	TIMER FOR DC LIGHTS	SEE ELECTRICAL BOM				SEE ELECTRICAL PACKAGE FOR DETAILS
35	1	MINI POWER UNIT	SEE ELECTRICAL BOM				SHIP LOOSE
36	4	S.S. ENCLOSURE LIFT LUG	PHOENIX PRODUCTS				
37	1	4" DIA. C.S. TOP MOUNTED INTERNAL CRITICAL GRADE DISK SILENCER	BERGARI OR EQUIV.				TOP MOUNTED
38	1	4" DIA. C.S. RAIN CAP	BERGARI OR EQUIV.				
39	1	4" DIA. C.S. EXHAUST ELBOW WITH 12" STACK & WELDED RAIN GUARD	PHOENIX PRODUCTS				
40	2	4" C.S. NBG KIT	BERGARI OR EQUIV.				
41	2	2" X 4" MUFFLER SUPPORT TUBING 50" LONG	PHOENIX PRODUCTS				
42	4	SILENCER BRACKETS WITH MOUNTING HARDWARE	PHOENIX PRODUCTS				
43	1	4" X 4" SILENCER SUPPORT ANGLE 56" LONG	PHOENIX PRODUCTS				
44	1	2.5" DIA. S.S. EXHAUST FLEX WITH CAT FLANGE ON ONE END & 4" ANSI FLANGE ON OTHER END	PHOENIX PRODUCTS				
45	1	HEAT RESISTANT EXHAUST BLANKET	PHOENIX PRODUCTS				
46	1	14-1/2"W. X 30"H. DISCHARGE ACCESS PANEL	PHOENIX PRODUCTS				
47	1	DISCHARGE DEFLECTOR PLATE	PHOENIX PRODUCTS				
48	1	DISCHARGE DRAIN CHANNEL	PHOENIX PRODUCTS				
49	1	5'-0" GAUGE STICK	BAGBY	GAUGE STICK 5'		9100100100	SHIPS LOOSE
50	1	OFF LOADING INSTRUCTIONS WITH WARRANTY FORM	PHOENIX PRODUCTS				SHIPS LOOSE
51	1	O & M MANUALS	PHOENIX PRODUCTS				SHIPS LOOSE
52	1	RAL#7040 LIGHT GRAY PAINT TOUCH-UP KIT	PHOENIX PRODUCTS			9000253500	SHIPS LOOSE
53	1	TANK PAINT SYSTEM: CARBOGUARD 8922 CORROSION RESISTANT-CROSS LINKED EPOXY PRIMER WITH CARBOTHANE 8832 TWO COMPONENT ACRYLIC, ALIPHATIC POLYURETHANE TOPCOAT; COLOR: PHOENIX PRODUCTS STANDARD RAL# 7040 LIGHT GRAY.	PHOENIX PRODUCTS				REQUIRES 177.9 SQ.FT.

COPYRIGHT ©PHOENIX PRODUCTS, 2014. ALL RIGHTS RESERVED

Phoenix Products

PHOENIX PRODUCTS
1544 EAST 8TH STREET
JACKSONVILLE, FLORIDA 32206

CITY OF TAMPA STPRM WTR LAKE ECKLES

COPYRIGHT © 2008 PHOENIX PRODUCTS ALL RIGHTS RESERVED

JOB# 25-519309

DRAWN BY:	AVB
CHECKED BY:	AM
DATE:	01.19.26
SCALE:	N.T.S.

CUSTOMER/ PROJECT TYPE: GSDW-350 W/60KW A-SAEST
TANK LABEL: ■ UL-142 ☐ UL-2085
F.D.E.P. CERTIFICATION NOS. ☐ EQ-013 ■ EQ-625 ☐ EQ-821

RING POWER
.
.

REV#	DESCRIPTION	BY	DATE:
A	SUBMITTED FOR CUSTOMER APPROVAL	AVB	02.11.26
B	REVISED PER CUSTOMER REQUEST 4/7/2026	AVB	04.17.26
C	REMADE TO REV A AND MOVED MPU TO EXTERNAL WALL	AVB	06.1.26
D	MOVED MPU TO EXTERNAL WALL, REMOVED STAND	AVB	06.17.26

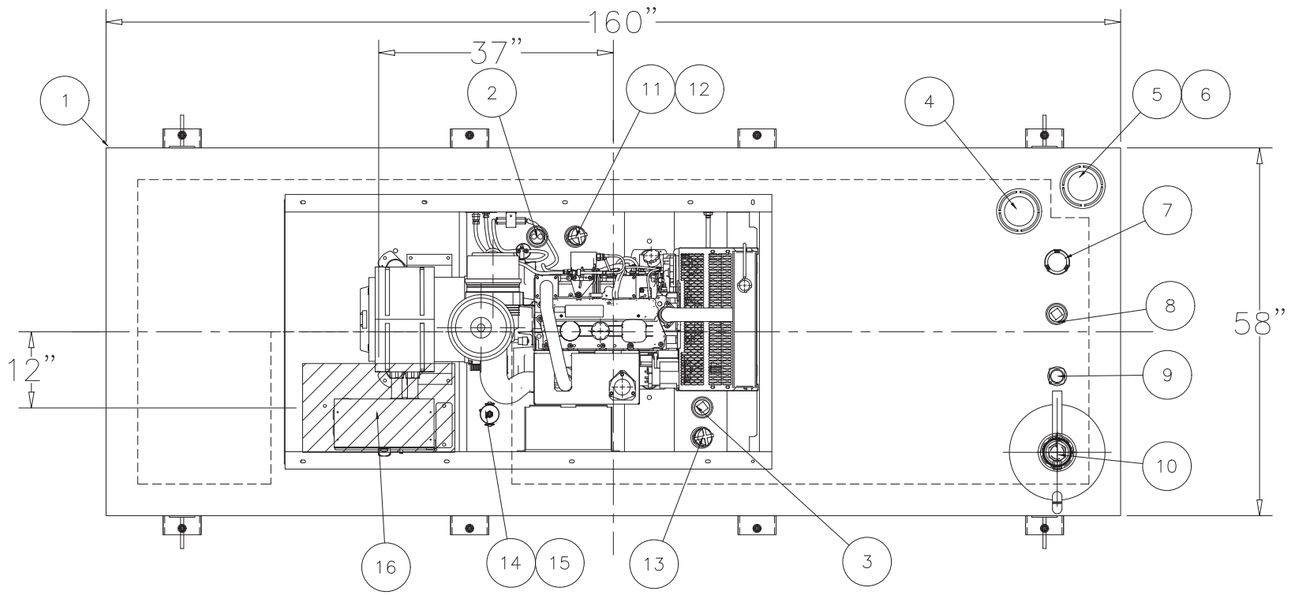

PLAN–GENSET & SUB–BASE TANK

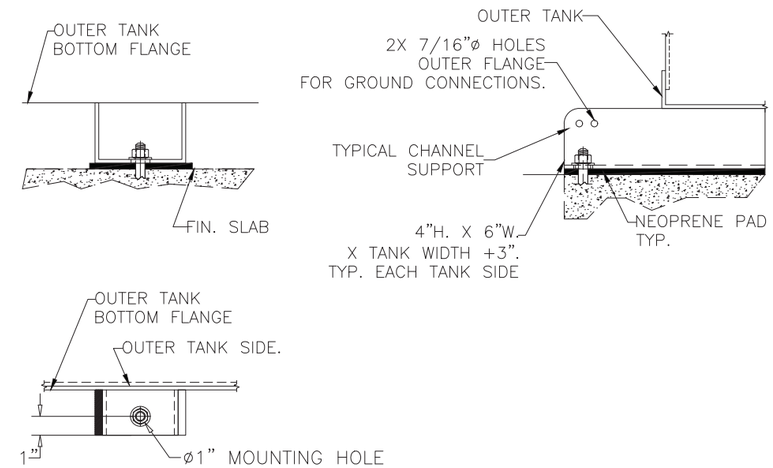

DETAIL–TANK MOUNTING CHANNELS

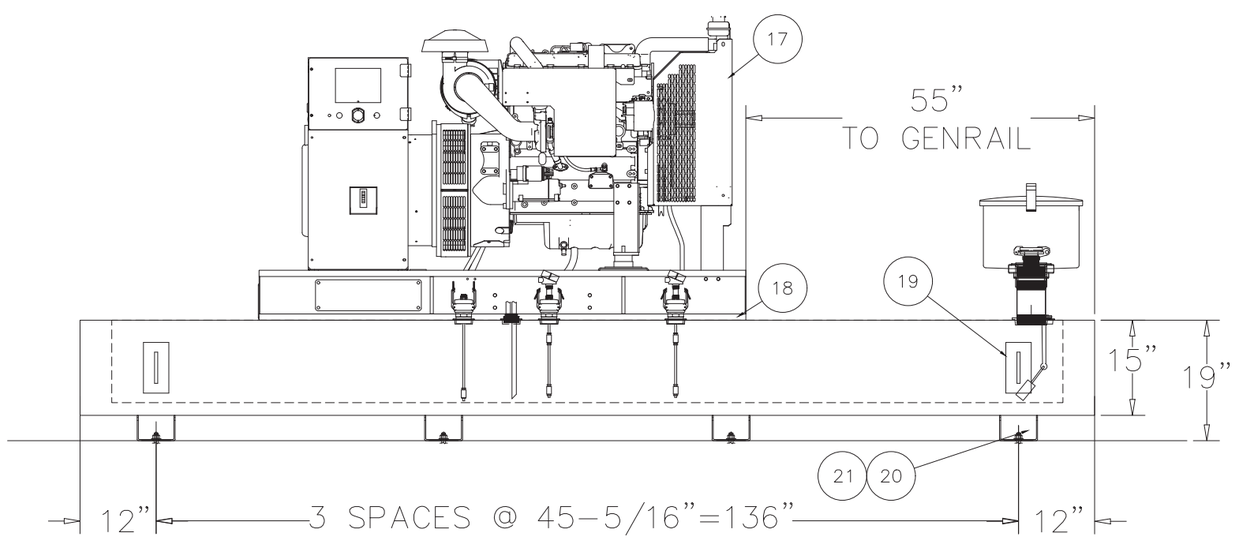

RIGHT SIDE ELEVATION–GENSET & SUB–BASE TANK

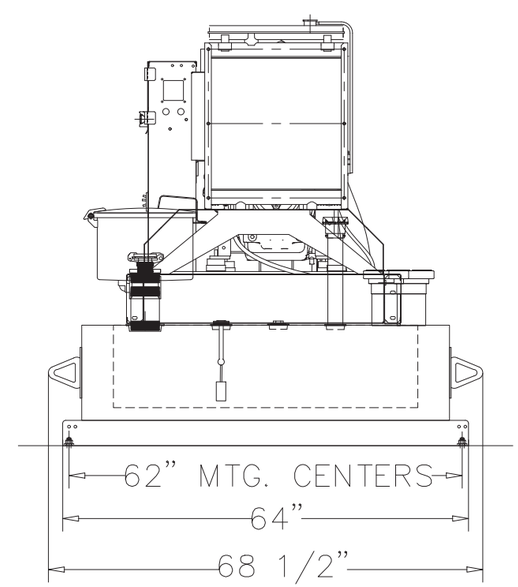

END ELEVATION–GENSET & SUB–BASE TANK

REV#	DESCRIPTION	BY	DATE:
A	SUBMITTED FOR CUSTOMER APPROVAL	AVB	02.11.26
B	REVISED PER CUSTOMER REQUEST 4/7/2026	AVB	04.17.26
C	REMADE TO REV A AND MOVED MPL TO EXTERNAL WALL	AVB	06.1.26
D	MOVED MPL TO EXTERNAL WALL, REMOVED STAND.	AVB	06.17.26

CUSTOMER/ PROJECT TYPE: GSW-350 W/60KW A-SMST
TANK LABEL: ■ UL-142 ☐ UL-2085
F.D.E.P. CERTIFICATION NOS. ☐ EQ-013 ■ EQ-625 ☐ EQ-821

RING POWER

JOB# 25-519309

DRAWN BY:	AVB
CHECKED BY:	AM
DATE:	01.19.26
SCALE:	N.T.S.

PHOENIX PRODUCTS
1944 EAST 8TH STREET
JACKSONVILLE, FLORIDA 32206

CITY OF TAMPA STORM WTR LAKE BOXLES

COPYRIGHT © 2014 PHOENIX PRODUCTS ALL RIGHTS RESERVED

Phoenix Products

S1

3 OF 4

COPYRIGHT © PHOENIX PRODUCTS, 2014. ALL RIGHTS RESERVED

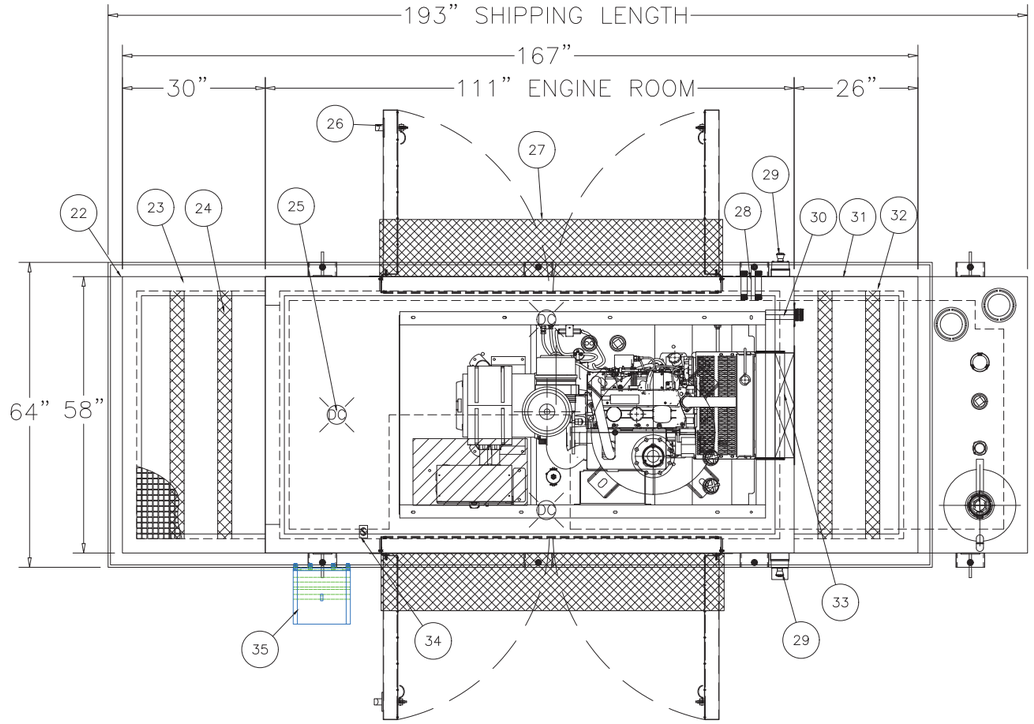

PLAN–GENSET, SUB–BASE TANK, & ENCLOSURE

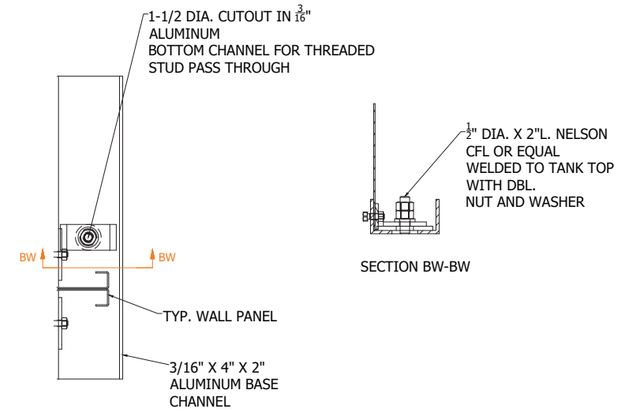

DETAIL–ENCLOSURE MOUNTING CHANNELS

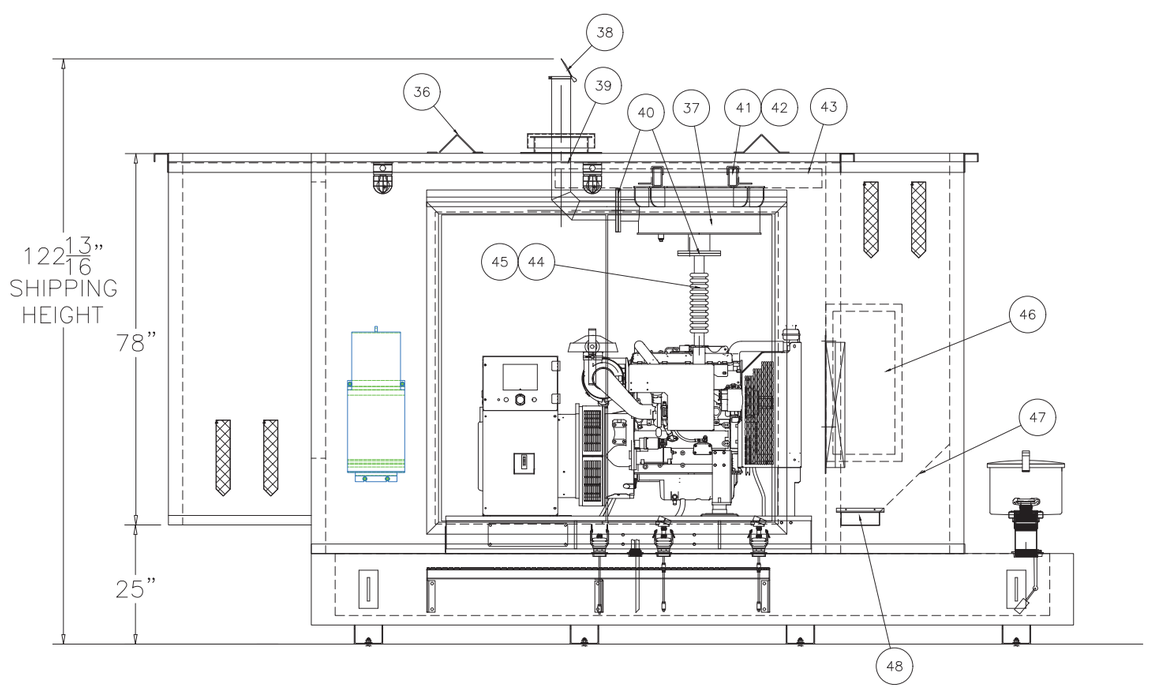

RIGHT SIDE ELEVATION–GENSET, SUB–BASE TANK, & ENCLOSURE

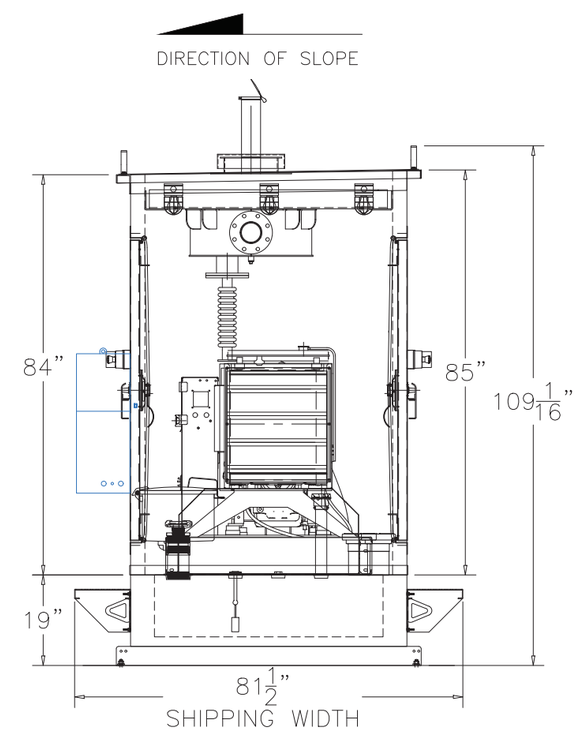

END ELEVATION–GENSET, SUB–BASE TANK, & ENCLOSURE

REV#	DESCRIPTION	BY	DATE:
A	SUBMITTED FOR CUSTOMER APPROVAL	AVB	02.11.26
B	REVISED PER CUSTOMER REQUEST 4/7/2026	AVB	04.17.26
C	REMADE TO REV A AND MOVED MPU TO EXTERNAL WALL	AVB	06.1.26
D	MOVED MPU TO EXTERNAL WALL, REMOVED STAND	AVB	06.17.26

CUSTOMER/ PROJECT TYPE: GSDW-350 W/60KW A-SMST
TANK LABEL: ■ UL-142 ☐ UL-2085
F.D.E.P. CERTIFICATION NOS. ☐ EQ-013 ■ EQ-625 ☐ EQ-821

RING POWER

JOB# 25-519309

DRAWN BY:	AVB
CHECKED BY:	AM
DATE:	01.19.26
SCALE:	N.T.S.

PHOENIX PRODUCTS
1944 EAST 7TH STREET
JACKSONVILLE, FLORIDA 32206

CITY OF TAMPA STPRM WTR LAKE BUCKLES

COPYRIGHT © 2014 PHOENIX PRODUCTS ALL RIGHTS RESERVED

Phoenix Products

S2

4 OF 4

COPYRIGHT © PHOENIX PRODUCTS, 2014. ALL RIGHTS RESERVED

PHOENIX PRODUCTS
JACKSONVILLE, FL

phoenix **products**

DRAWINGS PREPARED FOR:

RING POWER CORP.

C.O.T. STORM WATER LAKE ECKLES

GSDW-350 ASAEST CAT C4.4GC 60kW

JOB # 25-519309 DATE: 1/30/2026

PAGE CONTENTS:

EC-ELECTRICAL COVER PAGE
BOM-BILL OF MATERIAL
E1-ELECTRICAL SYMBOLS AND ACRONYMS
E2-CIRCUIT NUMBER IDENTIFICATION INDEX
E3-PROJECT SPECIFICATION NOTES
E4-PANEL SCHEDULE AND CIRCUITS
E5-7.5KVA MINI POWER UNIT DIMENSIONS
E6-MPU BREAKER LAYOUT AND GEN GROUND BONDING CONNECTION
E7-GEN SHORE POWER AC CONNECTIONS (J/W HEATER, BATTERY CHARGER AND ALTERNATOR HEATER)
E8-GENERATOR REMOTE ESTOP CONNECTIONS
E9-DC LIGHT CONNECTIONS
E10-4-20MA FUEL LEVEL SENSOR CONNECTIONS
E11-FUEL LEVEL ALARM CONNECTIONS

DIGITAL INPUTS

INPUT C TANK LEAK ALARM
INPUT G HIGH FUEL ALARM
INPUT H LOW FUEL LEVEL ALARM

DIGITAL OUTPUTS

I/O MODULE INPUTS

I/O MODULE OUTPUTS

JOB SCOPE:

SHIP LOOSE (1) 1PH 3W 480:120/240VAC 10KVA STAINLESS STEEL MINI POWER UNIT
INSTALL AND WIRE (2) NEMA 4X SS GENERATOR EMERGENCY STOP STATIONS
INSTALL AND WIRE (4) DC LIGHT(S), (1) 3 AMP CIRCUIT BREAKER AND (2) 60 MIN TIMER
INSTALL AND WIRE 4-20MA FUEL LEVEL SENSOR WIRE FUEL ALARMS

REV#	DESCRIPTION	BY	DATE:
REV-A	ELECTRICAL SUBMITTAL BASED ON QUOTE DATE 10/24/25	ZDB	1/20/26
REV-B	ADDED MPU, SS E-STOPS, 2ND TIMER & 4TH DC LIGHT	ZDB	4/17/26
REV-C	UPDATED MPU TO SS AND SHIPPED LOOSE	ZDB	5/27/26

CUSTOMER/ PROJECT TYPE: GSDW-350 ASAEST CAT C4.4GC 60kW
TANK LABEL: ☐UL-142 ☐UL-2085
F.D.E.P. CERTIFICATION NOS. ☐EQ-013 ☐EQ-625 ☐EQ-821

RING POWER CORP.
10421 TRAIN HILL DR
RIVERVIEW, FL 33578

JOB# 25-519309

DRAWN BY:	ZDB
CHECKED BY:	STB
DATE:	1/30/2026
SCALE:	N.T.S.

PHOENIX PRODUCTS
1977 BENOIST STREET
JACKSONVILLE, FLORIDA 32206

C.O.T. STORM WATER LAKE ECKLES
FLORIDA

COPYRIGHT © PHOENIX PRODUCTS, 2014. ALL RIGHTS RESERVED

Phoenix Products

EC

COPYRIGHT © PHOENIX PRODUCTS, 2014. ALL RIGHTS RESERVED

B.O.M.							
ITEM	QTY	DESCRIPTION	VENDOR	MODEL NUMBER	SKETCH NUMBER	DBS PART NUMBER	NOTE
1	2	ELECTRICAL SHOCK WARNING LABEL	SAFETY SIGNS	J5305–AFB	OR EQUAL	J5305–AFB (ENC)	APPLY TO MEET UL2200
2	1	1P 480/240 VAC 10 KVA TRANSFORMER SS	SQUARE D	MPUB10S40FSS	NO SUB	MPUB10S40FSS (ENC)	INSTALL AND WIRE
3	1	1 POLE 20 AMP CIRCUIT BREAKER	SQUARE D	QO120	NO SUB	331000SD20 (ENC)	INSTALL AND WIRE
4	2	SS GENERATOR REMOTE ESTOP	PILLA	GS120MS/ GENERATOR ESTOP	NO SUB	300601035 (ENC)	INSTALL AND WIRE
5	2	NC CONTACT BLOCK	PILLA	PILNCCB	NO SUB	3006010141(ENC)	INSTALL AND WIRE
6	2	NO CONTACT BLOCK	PILLA	PILNOCB	NO SUB	PILNOCB (ENC)	INSTALL AND WIRE
7	2	BUBBLE COVER	PILLA	PILCLHCOV1	NO SUB	3006010140 (ENC)	INSTALL
8	1	3 AMP SINGLE POLE CIRCUIT BREAKER	AUTOMATION DIRECT	FAZ–B3–1–NA	NO SUB	331000E003 (ENC)	INSTALL FOR DC LIGHTING
9	2	60 MINUTE TIMER	INTERMATIC	FF60MC	NO SUB	3006006546 (ENC)	INSTALL AND WIRE
10	4	DC LIGHT VAPOR TIGHT FIXTURE	TOPAZ	VFI100W50CG	OR EQUAL	3551000010 (ENC)	INSTALL AND WIRE
11	4	12V–24V AC/DC 12W LED	AMAZON/LEDMUNDO	12V–24V AC/DC 12W LED	OR EQUAL	3551201010 (ENC)	INSTALL
12	1	4–20 MA FUEL LEVEL SENSOR	FPI	SEE MATERIALS FOLDER	NO SUB	SEE MATERIALS FOLDER (TANK)	INSTALL AND WIRE

COPYRIGHT © PHOENIX PRODUCTS, 2014. ALL RIGHTS RESERVED

2 OF 13 BOM

Phoenix Products

PHOENIX PRODUCTS
1727 BENNETT STREET
JACKSONVILLE, FLORIDA 32206

C.O.T. STORM WATER LAKE ECKLES
FLORIDA

COPYRIGHT © 2008 PHOENIX PRODUCTS ALL RIGHTS RESERVED

JOB# 25–519309

DRAWN BY:	ZDB
CHECKED BY:	STB
DATE:	1/30/2026
SCALE:	N.T.S.

CUSTOMER/ PROJECT TYPE: GSDW–350 ASAEST CAT C4.4GC 60kW
TANK LABEL: ☐ UL–142 ☐ UL–2085
F.D.E.P. CERTIFICATION NOS. ☐ EQ–013 ☐ EQ–625 ☐ EQ–821

RING POWER CORP.
10421 FERN HILL DR
RIVERVIEW, FL 33578

REV#	DESCRIPTION	BY	DATE:
REV–A	ELECTRICAL SUBMITTAL BASED ON QUOTE DATE 10/24/25	ZDB	1/20/26
REV–B	ADDED MPU, SS E–STOPS, 2ND TIMER & 4TH DC LIGHT	ZDB	4/17/26
REV–C	UPDATED MPU TO SS AND SHIPPED LOOSE	ZDB	5/27/26

PHOENIX PRODUCTS
JACKSONVILLE, FL

phoenix products

ELECTRICAL SYMBOLS AND ACRONYMS

4–20 MA PROBE

60 MIN TIMER

BATTERY SCHEMATIC SYMBOL

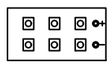
BATTERY

CIRCUIT BREAKER SINGLE POLE AC

CIRCUIT BREAKER TWO POLE AC

CIRCUIT BREAKER THREE POLE AC

CONTACT NORMALLY OPEN

CONTACT NORMALLY CLOSED

CIRCUIT BREAKER

COOLING/HEATING THERMOSTAT

EMERGENCY LIGHT

EMERGENCY EXIT LIGHT

NEMA 3R EMERGENCY STOP BREAK GLASS STATION

EMERGENCY STOP PUSH BUTTON

FUEL ALARM SWITCH SINGLE

FUEL ALARM SWITCH DUAL

EXHAUST FAN

EXTERIOR LED

GROUND

HIGH CURRENT RELAY

LED INTERIOR LIGHT

LINES NOT CONNECTED

LINES CONNECTED

LOUVER MOTOR

MP450 PROBE

PART IDENTIFICATION

PHOTO CELL

RELAY

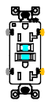
RECEPTACLE GFCI

RECEPTACLE SINGLE

STARTER

TOGGLE SWITCH

VPVT DC LIGHT

A1/RELAY COIL POSITIVE
A2/RELAY COIL NEGATIVE
A/AMPERES
AC/ ALTERNATING CURRENT
ARCMP/AIR COMPRESSOR
ARDRY/DESICANT AIR DRYER
ALBL+/ALARM BEACON LIGHT B+
ALBL–/ALARM BEACON LIGHT B–
ALTH/ALTERNATOR HEATER
AMP/AMPERES
AWG/AMERICAN WIRE GAUGE
BATT–/BATTERY NEGATIVE
BATT+/BATTERY POSITIVE
BCHG/BATTERY CHARGER
BCFA/BATTERY CHARGER AC FAIL
BHDR/BATTERY HEATER DISCONNECT RELAY
BHRCP/BATTERY HEATER RECEPTACLE
C/COMMON
CABL/COMMON ALARM BEACON LIGHT
CB/CIRCUIT BREAKER
CFBL/COMMON FAULT BEACON LIGHT
CHFLA/CRITICAL HIGH FUEL LEVEL
CIR/CIRCUIT
CKT/CIRCUIT
CLFLA/CRITICAL LOW FUEL LEVEL
COM/COMMON
CPHT/CONTROL PANEL HEATER
CR_/CONTROL RELAY
CT/CURRENT TRANSFORMER
DC/DIRECT CURRENT
DCLT/DC LIGHTS
DEFT/DEF TANK PUMP & CONTROLS
DI/DIGITAL INPUT
DI–REF/DIGITAL REFERENCE
DIO–I/O MODULE INPUT/OUTPUT
DISC SW/DISCONNECT SWITCH
DO/DIGITAL OUTPUT
DSCB/DOSING CABINET
EMLT/EMERGENCY LIGHTING
ESTP/EMERGENCY STOP
EXFN/EXHAUST FAN
EXIT/EXIT LIGHT
EXTLT/EXTERIOR LIGHT
EXTRP/EXTERIOR RECEPTACLE
FALC/FUEL ALARM COMMON
FALP–FUEL ALARM PANEL
FCCP/FUEL CONTROL PANEL CONTROL POWER
FCES/FUEL CONTROL EMERGENCY STOP
FCPP/FUEL CONTROL PUMP POWER
FFPNL/FUEL FILL PANEL
FFRP/FUEL FLOW SWITCH RETURN PUMP
FFSP/FLOW SWITCH SUPPLY PUMP
FLPL/FUEL POLISHER
FSOS/FUEL SHUT OFF SOLENOID
FTHT/FUEL TANK HEATER
GD/GROUND
GEN/GENERATOR
GND/GROUND
GFCI/GROUND FAULT CURRENT INTERRUPTER
GNSH/GENERATOR SPACE HEATER
GNSP/GENERATOR SHORE POWER
GRBL/GENERATOR RUNNING BEACON LIGHT
GRR/GEN RUN RELAY
HBVA/HIGH BATTERY VOLTAGE ALARM
HTDR C/HEAT DETECTOR RELAY COMMON
HTDR NO/HEAT DETECT RELAY NORMALLY OPEN
HTDR NC/HEAT DETECT RELAY NORMALLY CLOSED
HFLA/HIGH FUEL LEVEL ALARM
HTDT/HEAT DETECTOR
HTRC/HEAT TRACE HEATER
ISOGD/ISOLATED GROUND
INTA NO/INTRUSION ALARM NO
INTA C/INTRUSION ALARM COMMON
JWHT/JACKET WATER HEATER
JHDR/JWHT DISCONNECT RELAY
KVA/KILO VOLT AMPERES
KW/KILOWATTS
L1/LINE 1
L2/LINE 2
L3/LINE 3
LBCP L1/LOAD BANK CONTROL POWER L
LBCP N/LOAD BANK CONTROL POWER N
LBCT/LOAD BANK CURRENT XFMR
LBVA/LOW BATTERY VOLTAGE ALARM
LC L1/LC LINE
LC N/LC NEUTRAL
LCIG/LC ISOLATED GROUND
LFLA/LOW FUEL LEVEL ALARM
LOHD/LUBE OIL HEATER DISCONNECT RELAY
LOHT/LUBE OIL HEATER
LOLA/LOW OIL LEVEL ALARM
LT/LIGHT
LT SW/LIGHT SWITCH
LVMT/LOUVER MOTOR
MA–/MILLIAMP NEGATIVE
MA+/MILLIAMP POSITIVE
MBV/MOTORIZED BALL VALVE
MBV CL/MOTORIZED BALL VALVE CLOSED
MBV OP/MOTORIZED BALL VALVE OPEN
MPU/MINI POWER UNIT
MPZ/MINI POWER ZONE
M/MOTOR
MTR/MOTOR
MTW/MACHINE TOOL WIRE
N/AC NEUTRAL
NC/NORMALLY CLOSED
NEU/AC NEUTRAL
NO/NORMALLY OPEN
P/POLE
PH/PHASE
PHCL/PHOTO CELL
PMTR/PUMP MOTOR
RCPT/RECEPTACLE
R/RELAY
RLY/RELAY
RO/RELAY OUTPUT
RPMP L/RETURN PUMP LINE
RPMP N/RETURN PUMP NEUTRAL
S/SIGNAL
SDB+ SMOKE DETECTOR BATT+
SDB– SMOKE DETECTOR BATT–
SDCM SMOKE DETECTOR RELAY COMMON
SDNC SMOKE DETECT RELAY NORMALLY CLOSED
SDNO SMOKE DETECT RELAY NORMALLY OPEN
SHD/SHIELD
SMDT/SMOKE DETECTOR
SPHT/SPACE HEATER
SPMP L/SUPPLY PUMP LINE
SPMP N/SUPPLY PUMP NEUTRAL
SW/SWITCH
TB/TERMINAL BLOCK
TKLK/TANK LEAK ALARM
TMS/TANK MONITORING SYSTEM
TMSIG/TMS ISOLATED GROUND
TS/TERMIAL STRIP
TVL/TRAVELER
V/VOLTS
VAC/VOLTS ALTERNATING CURRENT
VDC/VOLTS DIRECT CURRENT
VIBA/VIBRATION ALARM
VIBC/VIBRATION ALARM COMMON
V+/VOLTS POSITIVE DC
W/WATTS
WDAR/WATER DETECTION ALARM RELAY
WDM/WATER DETECTION MODULE
WDS/WATER DETECTION SENSOR
WDT/WATER DETECTION
XFRM/TRANSFORMER

REV#	DESCRIPTION	BY	DATE:
REV–A	ELECTRICAL SUBMITTAL BASED ON QUOTE DATE 10/24/25	ZDB	1/20/26
REV–B	ADDED MPU, SS E–STOPS, 2ND TIMER & 4TH DC LIGHT	ZDB	4/17/26
REV–C	UPDATED MPU TO SS AND SHIPPED LOOSE	ZDB	5/27/26

CUSTOMER/ PROJECT TYPE: GSDW–350 ASAEST C/I C.K.&C. 60kW
TANK LABEL: ☐UL–142 ☐UL–2085
F.D.E.P. CERTIFICATION NOS. ☐EQ–013 ☐EQ–625 ☐EQ–821

RING POWER CORP.
10461 FERN HILL DR
RIVERVIEW, FL 33578

JOB# 25–519309

DRAWN BY: ZDB
CHECKED BY: STB
DATE: 1/30/2026
SCALE: N.T.S.

PHOENIX PRODUCTS
1707 MONROE STREET
JACKSONVILLE, FLORIDA 32206

C.O.T. STORM WATER LAKE BOXLES
FLORIDA

COPYRIGHT © 2026 PHOENIX PRODUCTS, ALL RIGHTS RESERVED

Phoenix Products

E1

COPYRIGHT © PHOENIX PRODUCTS, 2014. ALL RIGHTS RESERVED

PHOENIX PRODUCTS
JACKSONVILLE, FL

phoenix **products**

WIRE # WIRE COLOR WIRE SIZE CIRCUIT IDENTIFICATION

A101 BK 10 GSHP L1

WIRE LEGEND

WIRE COLOR INDENTIFICATION

BK=BLACK
BN=BROWN
BU=BLUE
GN=GREEN
GY=GRAY
OG=ORANGE
VT=VIOLET
RD=RED
WH=WHITE
YE=YELLOW
WIRED BY OTHERS— — — — —

__=WIRE COLOR/SIZE TBD

CIRCUIT DESCRIPTION

A1--/AC CIRCUIT
D2--/DC CIRCUIT
C3--/COMMUNICATION CIRCUIT
L-/AC LINE CIRCUIT
N-/AC NEUTRAL CIRCUIT
GND/AC GROUND CIRCUIT
B+/DC POSITIVE CIRCUIT
B-/DC NEGATIVE CIRCUIT
mA+/4-20 MA POSITIVE
mA-/4-20 MA NEGATIVE

AC CIRCUITS:

A100 __ __-GNSP L1/
A101 __ __-GNSP L2/N
A102 __ __-JWHT1 L1
A103 __ __-JWHT1 L2/N
A104 __ __-JWHT2 L1
A105 __ __-JWHT2 L2/N
A106 __ __-ALHT L1
A107 __ __-ALHT L2/N
A108 __ 12-BCHG L1
A109 __ 12-BCHG L2/N
A110 __ 12-BCHG2 L1
A111 __ 12-BCHG2 N
A112 __ 12-LT L1
A112 __ 12-LT SW
A112A __ 12-EXIT L1
A112A __ 12-LTBBU
A113 WH 12 LT N
A114 VT 12-TVL1
A115 VT 12-TVL2
A116 __ 12-EXTLT L1
A117 WH 12-EXTLT N
A118 __ 12-RCPT L1
A119 WH 12-RCPT N
A120 __ 12-EXTRP L1
A121 WH 12-EXTRP N
A123 __ 12-BHRCP L1
A123A __ 12-BHRCP L1
A124 WH 12-BHRCP N
A125 __ 8-SPHT L1
A126 __ 8-SPHT L2
A127 __ 8-SPHT2 L1
A128 __ 8-SPHT2 L2
A129 __ 12-EXFN L1
A130 WH 12-EXFN N
A131 __ 12-LBCP L1
A132 WH 12-LBCP N
A133 __ 14-LVMT L1
A134 WH 14-LVMT N
A135 __ 12-TMS L1
A136 WH 12-TMS N
A137 GN 12-TMSIG
A138 GN 12-TMSIG

AC CIRCUITS:

A139 __ 12-LC L1
A140 WH 12-LC N
A141 GN 12-LCIG
A142 GN 12-LCIG
A143 __ 12-FCCP L1
A144 WH 12-FCCP N
A145 __ __-FCPP L1
A146 WH __-FCPP N
A147 __ 12-FSOS L1
A148 WH 12-FSOS N
A149 __ 12-MBV L1
A150 WH 12-MBV N
A151 RD 18-MBV C
A151A RD 18-MBV NO
A151B BU 18-MBV NC
A152 __ 12-FALP L1
A153 __ 12-FALP N
A154 __ 12-EMLT L1
A155 WH 12-EMLT N
A156 __ 12-DSCB L1
A157 __ 12-DSCB N
A158 __ 12-HTRC L1
A159 WH 12-HTRC N
A160 __ 12-FFPNL L1
A161 WH 12-FFPNL N
A162 __ __-ARCMP L1
A163 __ __-ARCMP L2
A164 __ __-ARCMP L3
A165 __ __-ARDRY L1
A166 WH __-ARDRY N
A167 WH 14-LBCT+
A168 BK 14-LBCT-
A169 __ __-DEFT L1
A170 __ __-DEFT N
A171 __ 12-EXRCP L1
A172 WH 12-EXRCP N
A173 __ 12-SPMP1 L1
A174 WH 12-SPMP1 N
A175 __ 12-SPMP2 L1
A176 WH 12-SPMP2 N
A177 __ 12-RPMP1 L1
A178 WH 12-RPMP1 N

AC CIRCUITS:

A179 __ 12-RPMP2 L1
A180 WH 12-RPMP2 N
A181 __ 12-LOHT L1
A182 __ 12-LOHT L2
A183 __ 12-FLPL L1
A184 WH 12-FLPL N
A185 __ __-CPHT L1
A186 WH __-CPHT N
A187 __ __-FTHT L1
A188 WH __-FTHT N
A189 BK 18-FALC
A189 BN PIN1-FALC
A190 YE 18-CHFLA
A190 WH PIN2-CHFL
A191 BU 18-HFLA
A191 WH PIN2-HFLA
A192 WH 18-LFLA
A192 BN PIN1-LFLA
A193 OG 18-CLFL
A193 WH PIN2-CLFL
A194 RD 18-TKLK
A194 WH PIN2 TKLK

DC CIRCUITS:

B+ RD 8-BCHG B+
B- BK 8-BCHG B-
D200 RD __-BATT+
D200A RD __-BATT+
D201 BK __-COM
D201A BK __-COM
D202 YE 18-CHFL
D202 WH PIN2-CHFL
D202A YE 18-CHFL
D202A WH 18-CHFL
D203 BU 18-HFL
D203 WH PIN2-HFLA
D203A BU 18-HFLA
D203A WH 18-HFLA
D204 WH 18-LFLA
D204 BN PIN1-LFLA
D204A WH 18-LFLA
D204A BN 18-LFLA
D205 OG 18-CLFL
D205 WH PIN2-CLFL
D205A OG 18-CLFL
D205A WH 18-CLFL
D206 WH PIN2-TKLK
D206 RD 18-TKLK
D206A RD 18-TKLK
D206A WH 18-CLFLA
D207 BK 18-ESTP
D208 BU 18-BCFA
D209 YE 18-BCFA2
D210 RD 18-HTDT
D211 BK 18-HTDT
D212 RD 18-SDB+
D213 BK 18-SDB-
D214 GY 18-BHDR A1
D215 BK 18-BHDR A2
D216 RD 14-DCLT+
D216A RD 14-DCLT+
D216B RD 14-DCLT SW
D217 BK 14-DCLT-
D218 RD 14-CR A1
D218A RD 14-CR A1
D219 BK 14-CR_ A2
D219A BK 14-CR_ A2

DC CIRCUITS:

D220 BU PIN3-MA+
D220A BU 18-MA+
D221 BK PIN4-MA-
D221A BK 18-MA-
D222 BK 18-INTC
D223 YE 18-INTA
D224 BK 18-VIBC
D225 OG 18-VIBA
D226 BU 18-LOLA
D227 WH 18-CABL
D228 OG 18-CFBL
D229 YE 18-GRBL
D230 RD 14-FSOS+
D231 BK 14-FSOS-
D232 BK 18-HTDR C
D233 WH 18-HTDR NC
D234 GY 18-HTDR NO
D235 BK 18-SDTR C
D236 YE 18-SDTR NC
D237 OG 18-SDTR NO
D238 RD 18-MBV CL
D239 BU 18-MBV OP
D240 GY 14-JHDR A1
D241 BK 14-JHDR A2
D242 BN 18-FFSP
D243 BU 18-FFSP
D244 BK 18-FFSP
D245 BN 18-FFRT
D246 BU 18-FFRT
D247 BK 18-FFRT
D248 BK 18-LOHD A1
D249 OG 18-LOHD A2
D250 YE 18-LOHT
D250A YE 18-LOHT
D251 RD 14-HMI DC
D252 RD 14-HMI DC
D253 BK 18-SDCM
D254 YE 18-SDNO
D255 OR 18-SDNC
D256 BU PIN3-5VSIG

REV#	DESCRIPTION	BY	DATE:
REV-A	ELECTRICAL SUBMITTAL BASED ON QUOTE DATE 10/24/25	ZDB	1/20/26
REV-B	ADDED MPU, SS E-STOPS, 2ND TIMER & 4TH DC LIGHT	ZDB	4/17/26
REV-C	UPDATED MPU TO SS AND SHIPPED LOOSE	ZDB	5/27/26

CUSTOMER/ PROJECT TYPE: GSDW-350 ASAEST C4 C4.4CC 60kW
TANK LABEL: ☐UL-142 ☐UL-2085
F.D.E.P. CERTIFICATION NOS. ☐EQ-013 ☐EQ-625 ☐EQ-821

RING POWER CORP.
10421 TRAN ELLA DR
RIVERVIEW, FL 33578

JOB# 25-519309

DRAWN BY: ZDB
CHECKED BY: STB
DATE: 1/30/2026
SCALE: N.T.S.

PHOENIX PRODUCTS
1401 MONROE STREET
JACKSONVILLE, FLORIDA 32206

C.O.T. STORM WATER LAKE RECALES
FLORIDA

COPYRIGHT © 2014 PHOENIX PRODUCTS ALL RIGHTS RESERVED

Phoenix Products

E2

COPYRIGHT © PHOENIX PRODUCTS, 2014. ALL RIGHTS RESERVED

PHOENIX PRODUCTS
JACKSONVILLE, FL

phoenix **products**

PROJECT SPECIFICATIONS:

IMPORTANT NOTES:

THIS ELECTRICAL PACKAGE WAS DESIGNED BASED OFF THE INFORMATION PROVIDED IN THE SPECIFICATIONS AND OR THE SALES QUOTE

ALL ELECTRICAL SYSTEMS AND INSTALLATIONS MUST MEET THE MANUFACTURER'S INSTALLATION INSTRUCTIONS INCLUDING TORQUE SPECIFICATIONS, NFPA 70 NATIONAL ELECTRIC CODE (NEC), STATE AND LOCAL CODES AND STANDARDS WITHOUT EXCEPTIONS

ALL WIRE BREAKS, SPLITS AND SPLICES WILL HAVE A WIRE IDENTIFICATION LABEL AT EACH END OF THE CIRCUIT

REV#	DESCRIPTION	BY	DATE:
REV-A	ELECTRICAL SUBMITTAL BASED ON QUOTE DATE 10/24/25	ZDB	1/20/26
REV-B	ADDED MPU, SS E-STOPS, 2ND TIMER & 4TH DC LIGHT	ZDB	4/17/26
REV-C	UPDATED MPU TO SS AND SHIPPED LOOSE	ZDB	5/27/26

CUSTOMER/ PROJECT TYPE: GSDW-350 ASAEST CAT CX.4CC 60kW
TANK LABEL: ☐UL-142 ☐UL-2085
F.D.E.P. CERTIFICATION NOS. ☐EQ-013 ☐EQ-625 ☐EQ-821

RING POWER CORP.
10421 FERN HILL DR
RIVERVIEW, FL 33578

JOB# 25-519309

DRAWN BY:	ZDB
CHECKED BY:	STB
DATE:	1/30/2026
SCALE:	N.T.S.

PHOENIX PRODUCTS
1707 MONROE STREET
JACKSONVILLE, FLORIDA 32206

C.O.T. STORM WATER LAKE BUCKLES
FLORIDA

COPYRIGHT © 2014 PHOENIX PRODUCTS ALL RIGHTS RESERVED

Phoenix Products

E3

COPYRIGHT © PHOENIX PRODUCTS, 2014. ALL RIGHTS RESERVED

PROJECT NUMBER:	25-519309	PANEL WIRING:	1P 3W	INTERUPT RATING:	18kA
PROJECT NAME:	COT LAKE ECKLES	SECONDARY AMP:	60		
PANEL MANUFACTURE	SQUARE D	SECONDARY VOLTAGE:	120/240		
PANEL MODEL:	MPUB10S40FSS	SUB BREAKER TYPE:	PLUG IN		
PRIMARY AMPERAGE:	30	SUB BREAKER MODEL:	QO		
PRIMARY VOLTAGE:	480	ENCLOSURE PART NUMBER:	SS CODE A		

CKT#	CIRCUIT DISCRIPTION	AMP	POLE	A		B		POLE	AMP	CIRCUIT DISCRIPTION	CKT#
1	GEN SHORE POWER	20	1	1.54				2	60	MAIN	2
3											4
5											6
7											8
9											10
11											12
		TOTAL KVA		1.54		0					

AC CIRCUITS:

DC CIRCUITS:

E8:
D207 BK 18-RESTP
D207A BK 18-RESTP
D207B BK 18-RESTP

E9:
D216 RD 14-DCLT+
D216A RD 14-DCLT+
D216B RD 14-DCLT SW
D217 BK 14-DCLT-

E10:
D220 BU PIN3-MA+
D221 BK PIN4-MA-
BN PIN1-GND

E11:
D201 BK PIN4-FALC
D201 BN PIN1-FALC
D201 BK 18-FALC
D203 WH PIN2-HFLA
D203 WH 18-HFLA
D204 BN PIN1-LFLA
D204 BN 18-LFLA
D206 WH PIN2-TKLK
D206 WH 18-TKLK

COMMUNICATION CIRCUITS:

REV#	DESCRIPTION	BY	DATE:
REV-A	ELECTRICAL SUBMITTAL BASED ON QUOTE DATE 10/24/25	ZDB	1/20/26
REV-B	ADDED MPU, SS E-STOPS, 2ND TIMER & 4TH DC LIGHT	ZDB	4/17/26
REV-C	UPDATED MPU TO SS AND SHIPPED LOOSE	ZDB	5/27/26

CUSTOMER/ PROJECT TYPE: GSDW-350 ASAEST C/I C.K.ACC. 60kW
TANK LABEL: ☐UL-142 ☐UL-2085
F.D.E.P. CERTIFICATION NOS. ☐EQ-013 ☐EQ-625 ☐EQ-821

RING POWER CORP.
10421 TERN HILL DR
RIVERVIEW, FL 33578

JOB# 25-519309

DRAWN BY: ZDB
CHECKED BY: STB
DATE: 1/30/2026
SCALE: N.T.S.

PHOENIX PRODUCTS
1707 MARKET STREET
JACKSONVILLE, FLORIDA 32206

C.O.T. STORM WATER LAKE ECKLES
FLORIDA

COPYRIGHT © 2014 PHOENIX PRODUCTS ALL RIGHTS RESERVED

Phoenix Products

E4

COPYRIGHT © PHOENIX PRODUCTS, 2014. ALL RIGHTS RESERVED

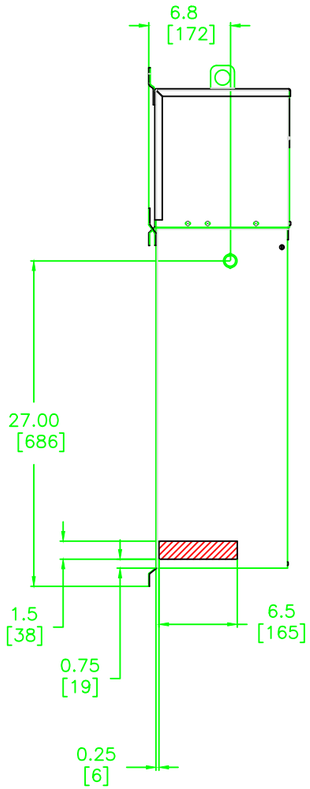

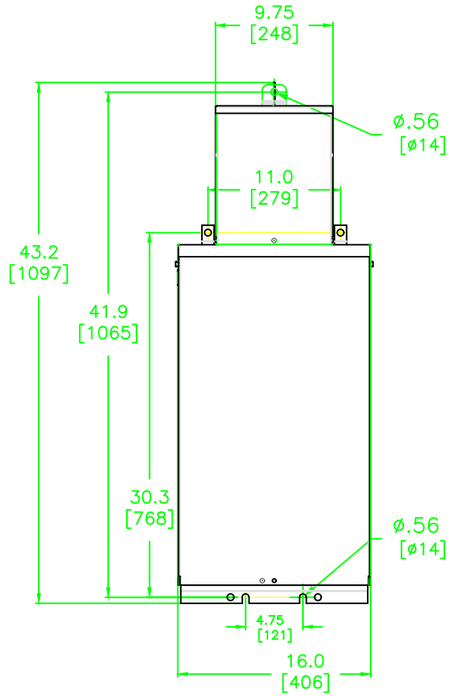

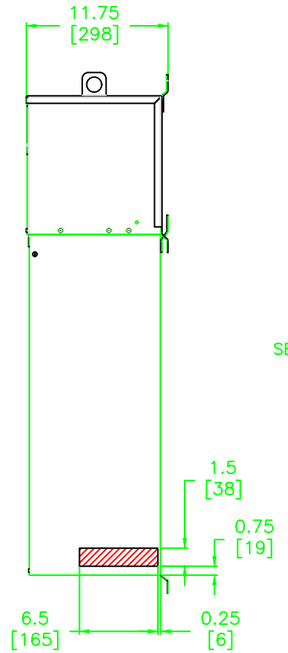

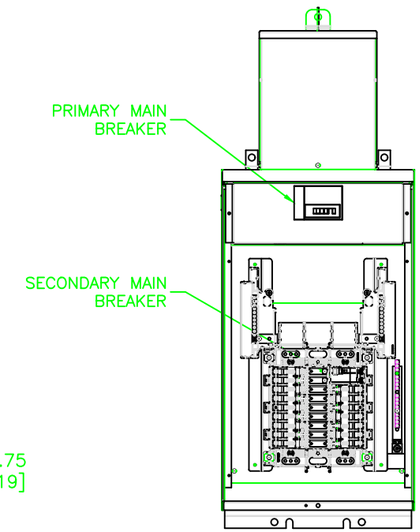

IN EACH PHASE CONNECT TO TAPS	
PRIMARY VOLTS	2–5 %FCBN
480	H1–H4
456	H1–H3
432	H1–H2

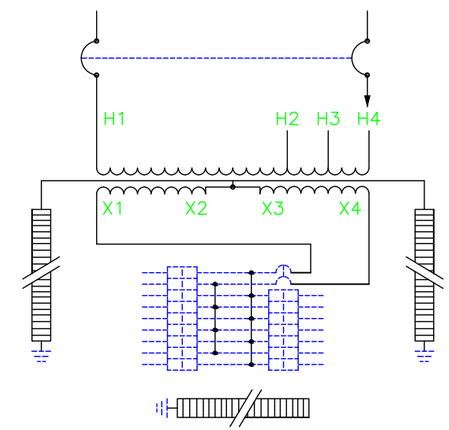

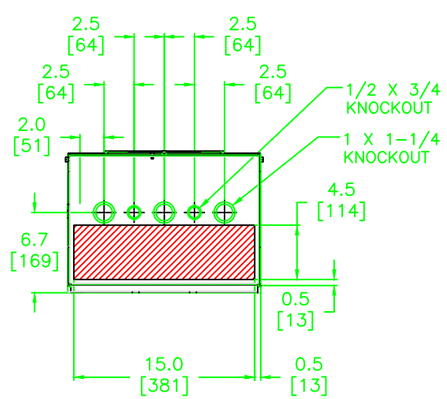

TRANSFORMER SPECIFICATIONS:

10 KVA 1Ø 60 HZ
PRIMARY VOLTAGE 480
SECONDARY VOLTAGE 120/240
115°C RISE ABOVE
180°C INSULATION SYSTEM
APPROXIMATE WEIGHT: 220 LBS
GUARANTEED SOUND LEVEL: 45 dB
PRIMARY MAIN BREAKER: HDL26030
SECONDARY MAIN BREAKER: QOB260
PANELBOARD INTERIOR: NQM18L1CMPZ WITH 16 AVAILABLE SPACES.

DUAL DIMENSIONS: INCHES
MILLIMETERS

NOTES:
1) NEMA 3R ENCLOSURE.
2) MINIMUM FIELD CLEARANCES: 12.00/[305] SIDE AND 12.00/[305] VERTICAL.
3) CONDUIT ENTRY AREA ARE SHOWN SHADED ABOVE, LOCATIONS ARE SIDES AND BOTTOM.
4) SUITABLE FOR SERVICE ENTRANCE.

REV#	DESCRIPTION	BY	DATE:
REV–A	ELECTRICAL SUBMITTAL BASED ON QUOTE DATE 10/24/25	ZDB	1/20/26
REV–B	ADDED MPU, SS E–STOPS, 2ND TIMER & 4TH DC LIGHT	ZDB	4/17/26
REV–C	UPDATED MPU TO SS AND SHIPPED LOOSE	ZDB	5/27/26

CUSTOMER/ PROJECT TYPE: GSDW–350 ASAEST CAT CX.4GC 60kW
TANK LABEL: ☐UL–142 ☐UL–2085
F.D.E.P. CERTIFICATION NOS. ☐EQ–013 ☐EQ–625 ☐EQ–821
RING POWER CORP.
10421 TRON HILL DR
RIVERVIEW, FL 33578

JOB# 25–519309
DRAWN BY: ZDB
CHECKED BY: STB
DATE: 1/30/2026
SCALE: N.T.S.

PHOENIX PRODUCTS
1197 BROADBIT AVENUE
JACKSONVILLE, FLORIDA 32206
C.O.T. STORM WATER LAKE BUCKLES
FLORIDA
COPYRIGHT © 2014 PHOENIX PRODUCTS ALL RIGHTS RESERVED

Phoenix Products

E5
7 OF13

COPYRIGHT © PHOENIX PRODUCTS, 2014. ALL RIGHTS RESERVED

SQUARE D MPUB10S40FSS
480:120/240VAC 1P 3W
PRIMARY 30 AMP SECONDARY 60 AMP

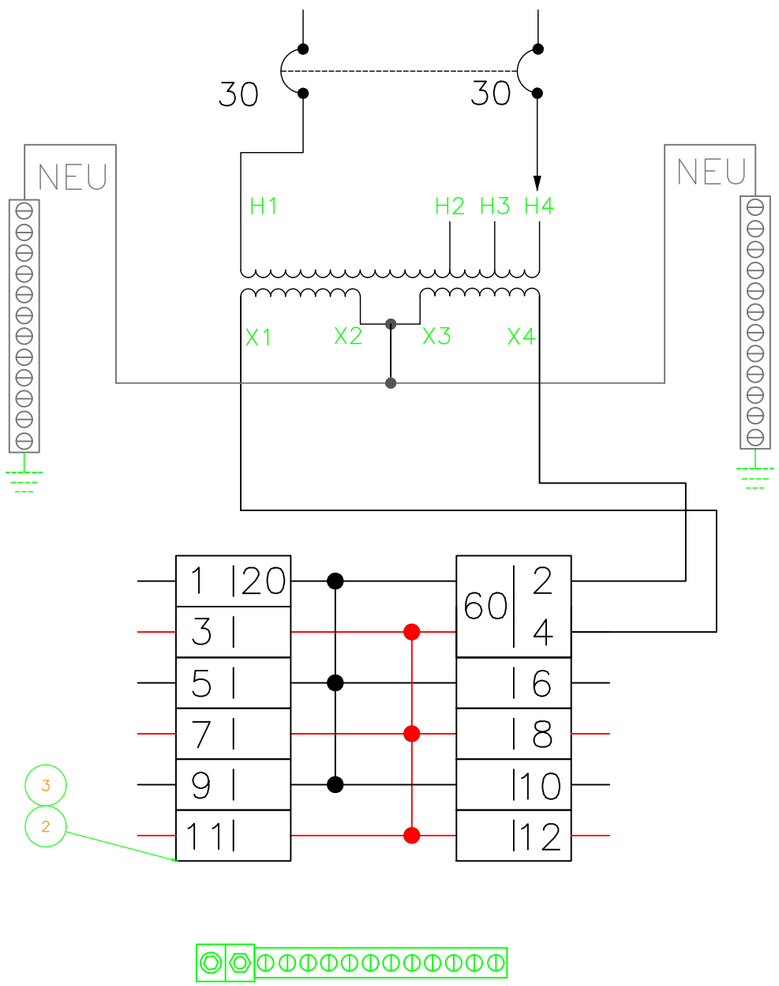

PRIMARY CIRCUIT BREAKER
44.3 lbf.in (5 N.m)
(AWG 14...AWG 10)
123.9 lbf.in (14 N.m)
(AWG 8...AWG 3/0)

MPU
MINI POWER UNIT
60A 480:120/240VAC
1PH 3W 60HZ

1

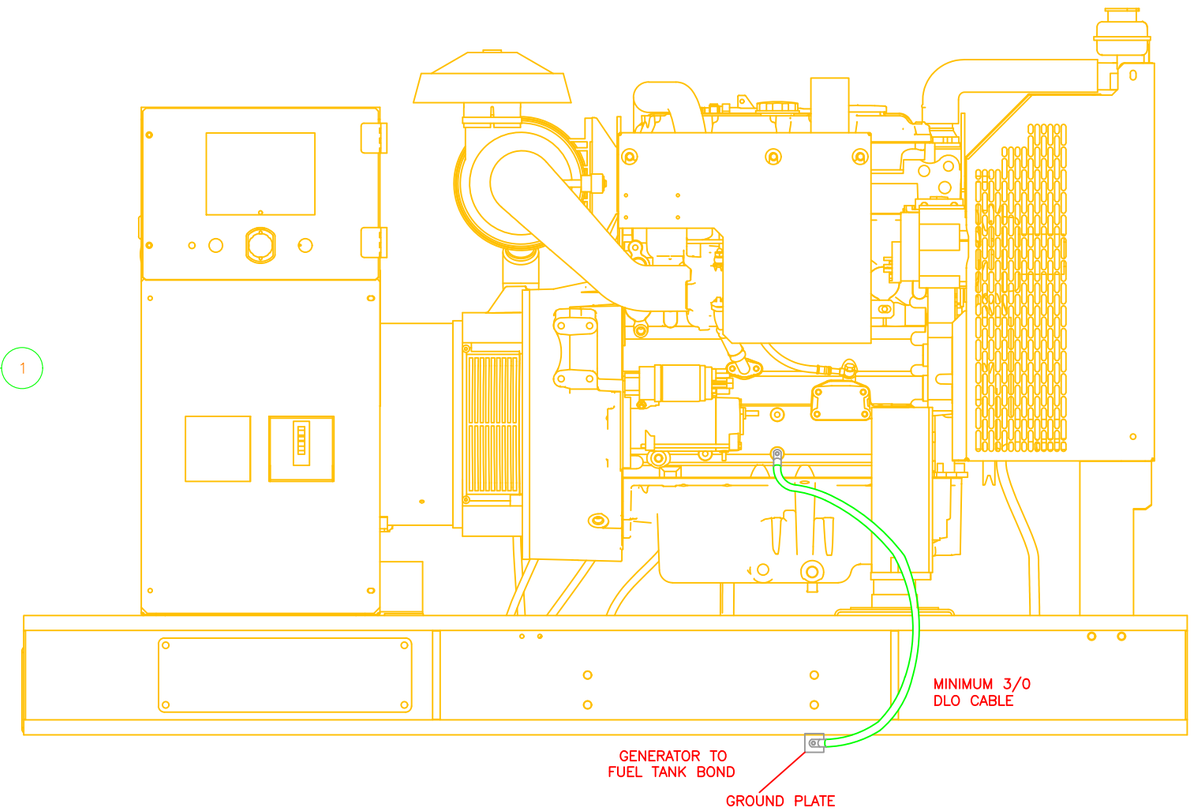

REV#	DESCRIPTION	BY	DATE:
REV-A	ELECTRICAL SUBMITTAL BASED ON QUOTE DATE 10/24/25	ZDB	1/20/26
REV-B	ADDED MPU, SS E-STOPS, 2ND TIMER & 4TH DC LIGHT	ZDB	4/17/26
REV-C	UPDATED MPU TO SS AND SHIPPED LOOSE	ZDB	5/27/26

CUSTOMER/ PROJECT TYPE: GSDW-350 ASAEST C41 CX.4GC 60kW
TANK LABEL: ☐UL-142 ☐UL-2085
F.D.E.P. CERTIFICATION NOS. ☐EQ-013 ☐EQ-625 ☐EQ-821

RING POWER CORP.
10421 FERN HILL DR
RIVERVIEW, FL 33578

JOB# 25-519309

DRAWN BY: ZDB
CHECKED BY: STB
DATE: 1/30/2026
SCALE: N.T.S.

PHOENIX PRODUCTS
1497 MONROE STREET
JACKSONVILLE, FLORIDA 32206

C.O.T. STORM WATER LIFT STATIONS
FLORIDA

COPYRIGHT © PHOENIX PRODUCTS, 2014. ALL RIGHTS RESERVED

Phoenix Products

E6

8 OF13

COPYRIGHT © PHOENIX PRODUCTS, 2014. ALL RIGHTS RESERVED

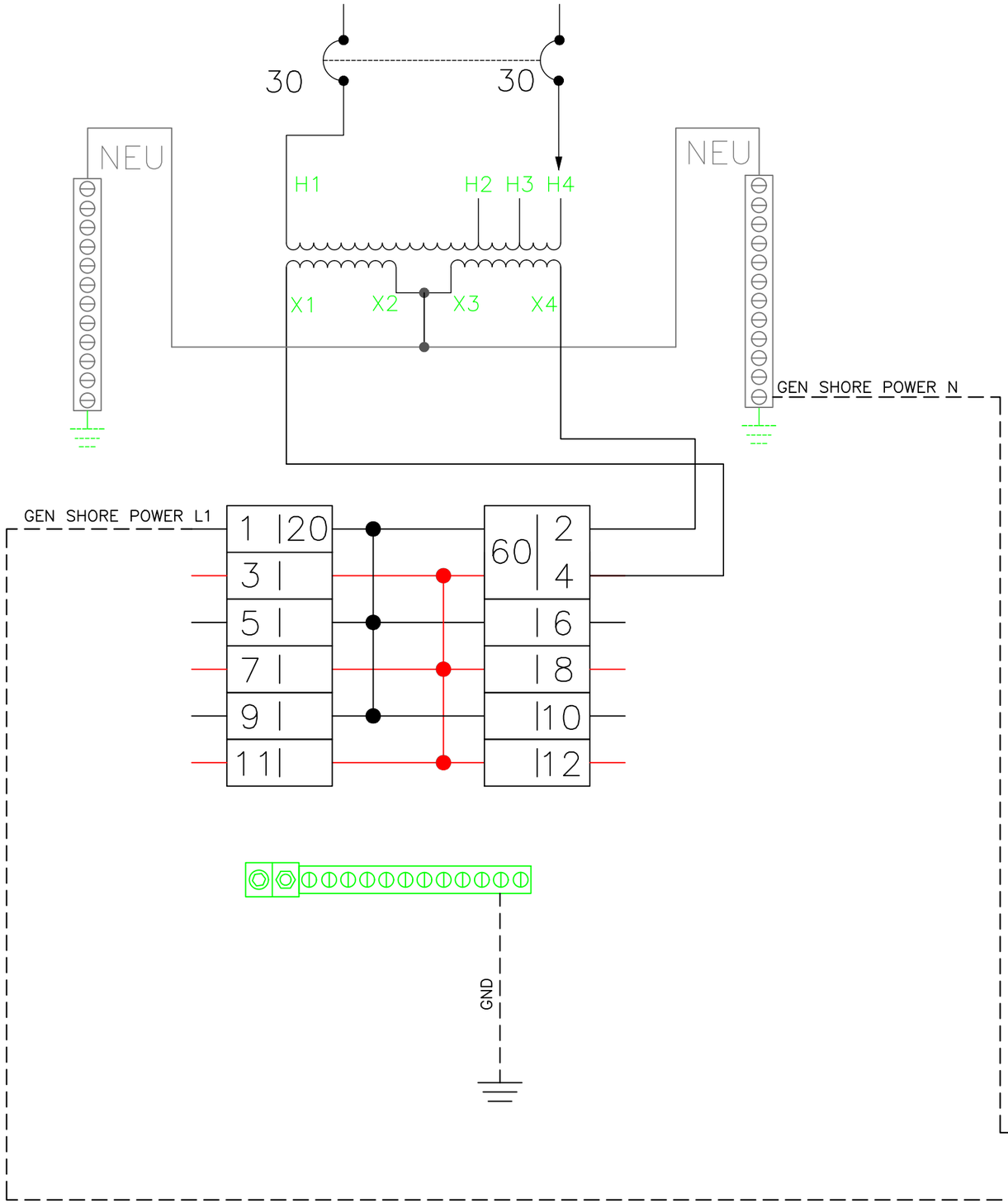

GEN SHORE POWER
MPU CB-1-20A
120VAC 60HZ

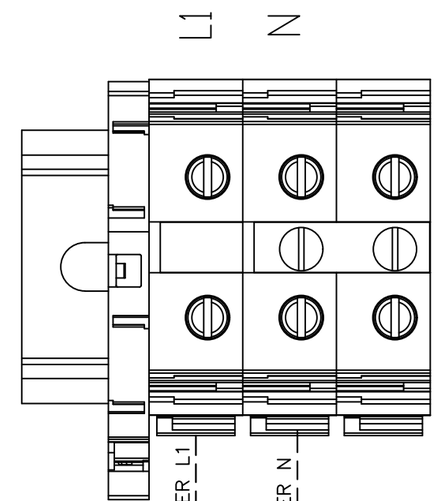

REV#	DESCRIPTION	BY	DATE:
REV-A	ELECTRICAL SUBMITTAL BASED ON QUOTE DATE 10/24/25	ZDB	1/20/26
REV-B	ADDED MPU, SS E-STOPS, 2ND TIMER & 4TH DC LIGHT	ZDB	4/17/26
REV-C	UPDATED MPU TO SS AND SHIPPED LOOSE	ZDB	5/27/26

CUSTOMER/ PROJECT TYPE: GSDW-350 ASAEST C4 C4.4GC 60kW
TANK LABEL: ☐UL-142 ☐UL-2085
F.D.E.P. CERTIFICATION NOS. ☐EQ-013 ☐EQ-625 ☐EQ-821

RING POWER CORP.
10421 FERN HILL DR
RIVERVIEW, FL 33578

JOB# 25-519309

DRAWN BY:	ZDB
CHECKED BY:	STB
DATE:	1/30/2026
SCALE:	N.T.S.

PHOENIX PRODUCTS
INTO MOTION ENERGY
JACKSONVILLE, FLORIDA 32206

C.O.T. STORM WATER LIFT STATIONS
FLORIDA

COPYRIGHT © 2026 PHOENIX PRODUCTS ALL RIGHTS RESERVED

Phoenix Products

E7

COPYRIGHT © PHOENIX PRODUCTS, 2014. ALL RIGHTS RESERVED

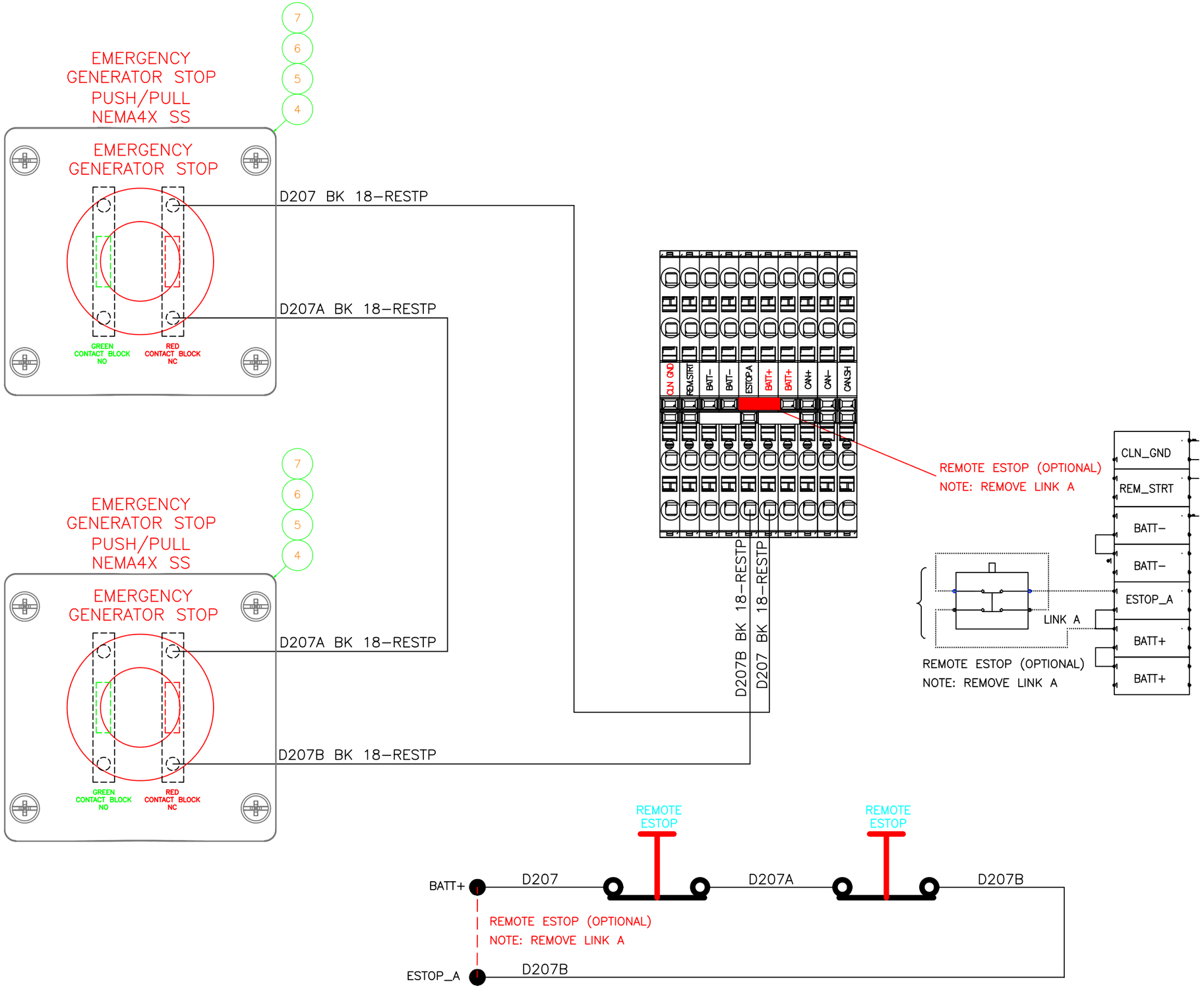

REV#	DESCRIPTION	BY	DATE:
REV-A	ELECTRICAL SUBMITTAL BASED ON QUOTE DATE 10/24/25	ZDB	1/20/26
REV-B	ADDED MPU, SS E-STOPS, 2ND TIMER & 4TH DC LIGHT	ZDB	4/17/26
REV-C	UPDATED MPU TO SS AND SHIPPED LOOSE	ZDB	5/27/26

CUSTOMER/ PROJECT TYPE: GSDW-350 ASAEST C/I C.K.ACC. 60kW
TANK LABEL: ☐ UL-142 ☐ UL-2085
F.D.E.P. CERTIFICATION NOS. ☐ EQ-013 ☐ EQ-625 ☐ EQ-821

RING POWER CORP.
10421 FERN HILL DR
RIVERVIEW, FL 33578

JOB# 25-519309

DRAWN BY: ZDB
CHECKED BY: STB
DATE: 1/30/2026
SCALE: N.T.S.

PHOENIX PRODUCTS
INNOVATIONS MOVING FORWARD
JACKSONVILLE, FLORIDA 32206

C.O.T. STORM WATER LAKE BOXLES
FLORIDA

COPYRIGHT © 2009 PHOENIX PRODUCTS, ALL RIGHTS RESERVED

Phoenix Products

E8

10OF13

COPYRIGHT © PHOENIX PRODUCTS, 2014. ALL RIGHTS RESERVED

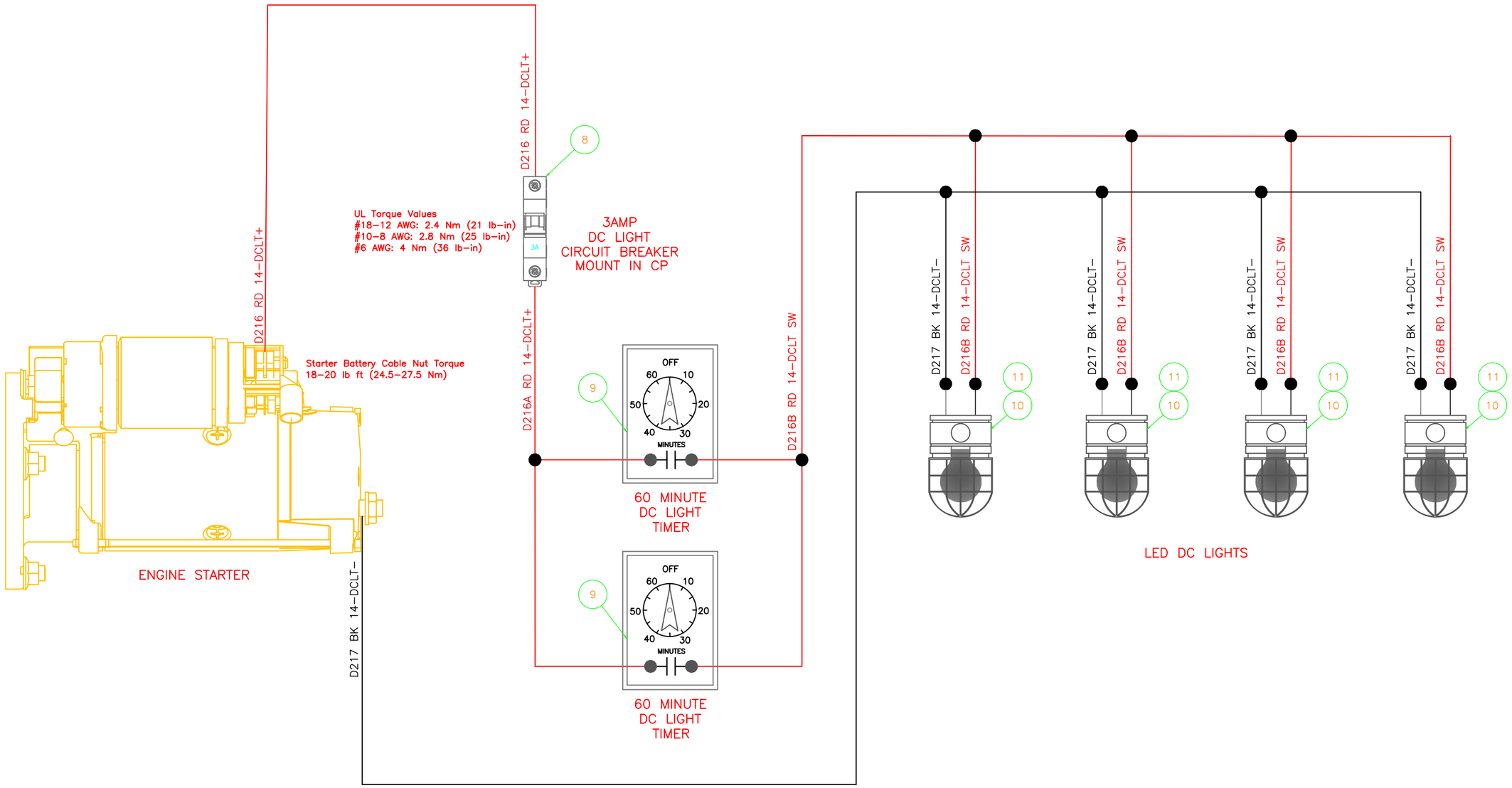

REV#	DESCRIPTION	BY	DATE:
REV-A	ELECTRICAL SUBMITTAL BASED ON QUOTE DATE 10/24/25	ZDB	1/20/26
REV-B	ADDED MPU, SS E-STOPS, 2ND TIMER & 4TH DC LIGHT	ZDB	4/17/26
REV-C	UPDATED MPU TO SS AND SHIPPED LOOSE	ZDB	5/27/26

CUSTOMER/ PROJECT TYPE: GSDW-350 ASAEST C/I C.K.&C. 60kW
TANK LABEL: ☐UL-142 ☐UL-2085
F.D.E.P. CERTIFICATION NOS. ☐EQ-013 ☐EQ-625 ☐EQ-821

RING POWER CORP.
DR
10421 VERN HILL DR
RIVERVIEW, FL 33578

JOB# 25-519309

DRAWN BY:	ZDB
CHECKED BY:	STB
DATE:	1/30/2026
SCALE:	N.T.S.

PHOENIX PRODUCTS
1977 BENNETT STREET
JACKSONVILLE, FLORIDA 32206

C.O.T. STORM WATER LIFT STATIONS
FLORIDA

COPYRIGHT © PHOENIX PRODUCTS, 2014. ALL RIGHTS RESERVED

Phoenix Products

E9

S:\Eng\JOBS\2025 JOBS\25-519309 GSDW ASAEST 60kw City of Tampa Ring Power CV\Submittals\25-519309 ELECTRICAL SUB REV.C.dwg, 5/27/2026 1:19:39 PM, AutoCAD PDF (Smallest File).pc3

COPYRIGHT © PHOENIX PRODUCTS, 2014. ALL RIGHTS RESERVED

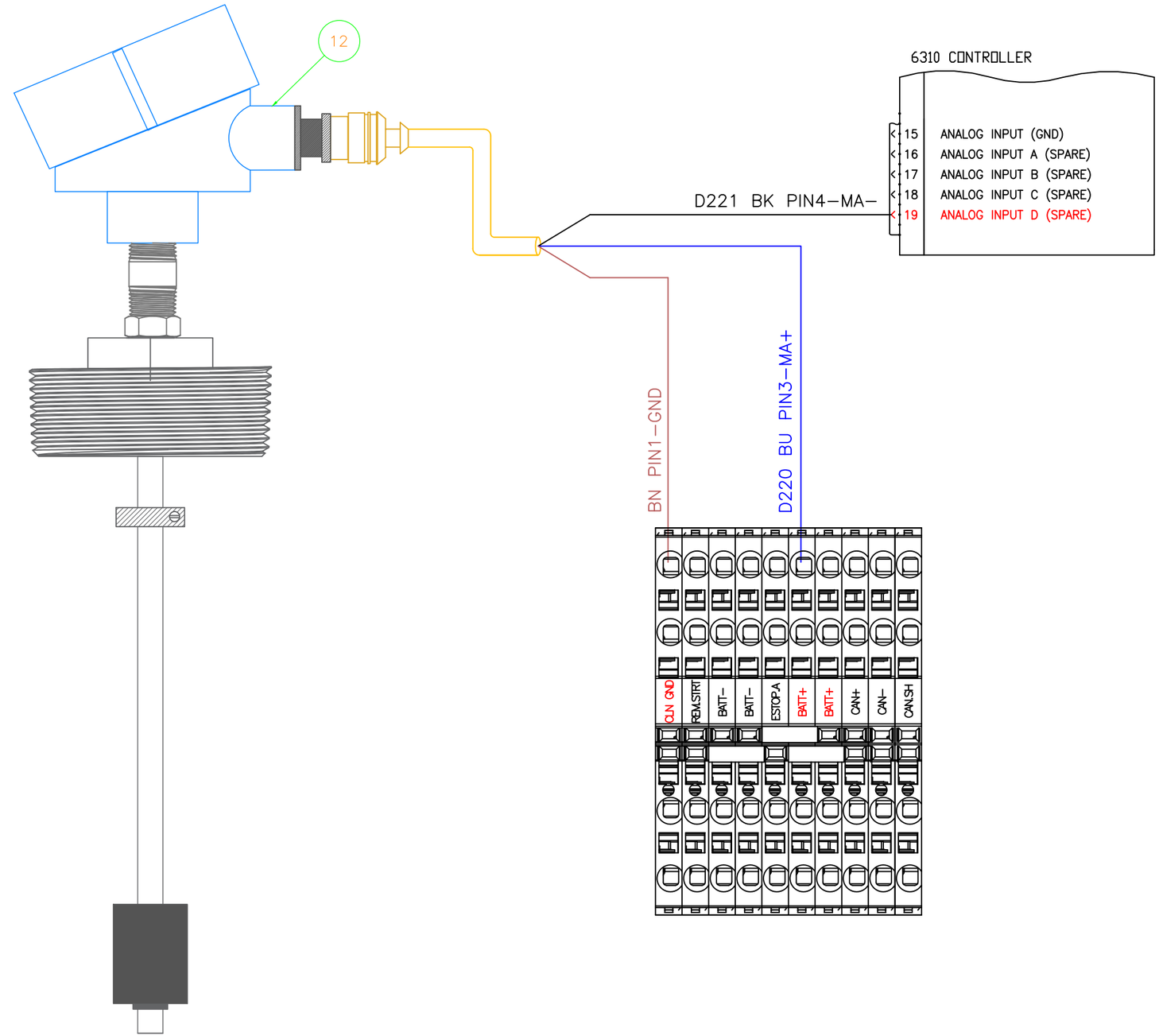

REV#	DESCRIPTION	BY	DATE:
REV-A	ELECTRICAL SUBMITTAL BASED ON QUOTE DATE 10/24/25	ZDB	1/20/26
REV-B	ADDED MPU, SS E-STOPS, 2ND TIMER & 4TH DC LIGHT	ZDB	4/17/26
REV-C	UPDATED MPU TO SS AND SHIPPED LOOSE	ZDB	5/27/26

CUSTOMER/ PROJECT TYPE: GSDW-350 ASAEST C41 CX.4CC 60kW
TANK LABEL: ☐ UL-142 ☐ UL-2085
F.D.E.P. CERTIFICATION NOS. ☐ EQ-013 ☐ EQ-625 ☐ EQ-821

RING POWER CORP.
10421 TRIN HILL DR
RIVERVIEW, FL 33578

JOB# 25-519309

DRAWN BY:	ZDB
CHECKED BY:	STB
DATE:	1/30/2026
SCALE:	N.T.S.

PHOENIX PRODUCTS
1977 BENNETT STREET
JACKSONVILLE, FLORIDA 32206

C.O.T. STORM WATER LIFT STATIONS
FLORIDA

COPYRIGHT © 2014 PHOENIX PRODUCTS ALL RIGHTS RESERVED

Phoenix Products

E10

COPYRIGHT © PHOENIX PRODUCTS, 2014. ALL RIGHTS RESERVED

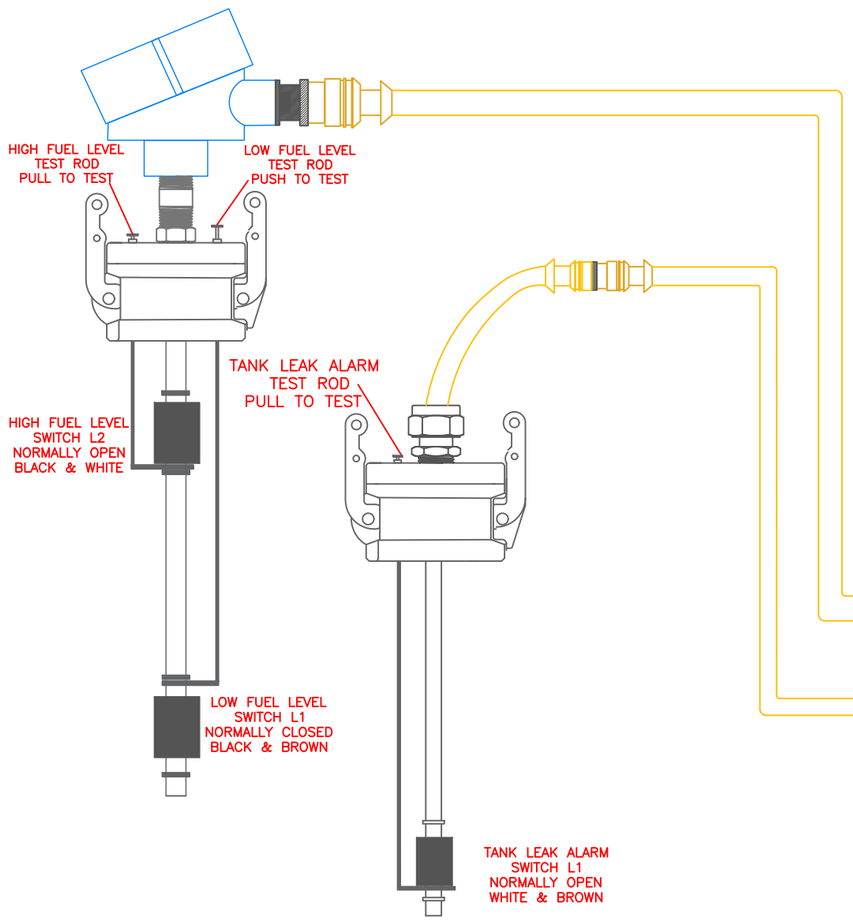

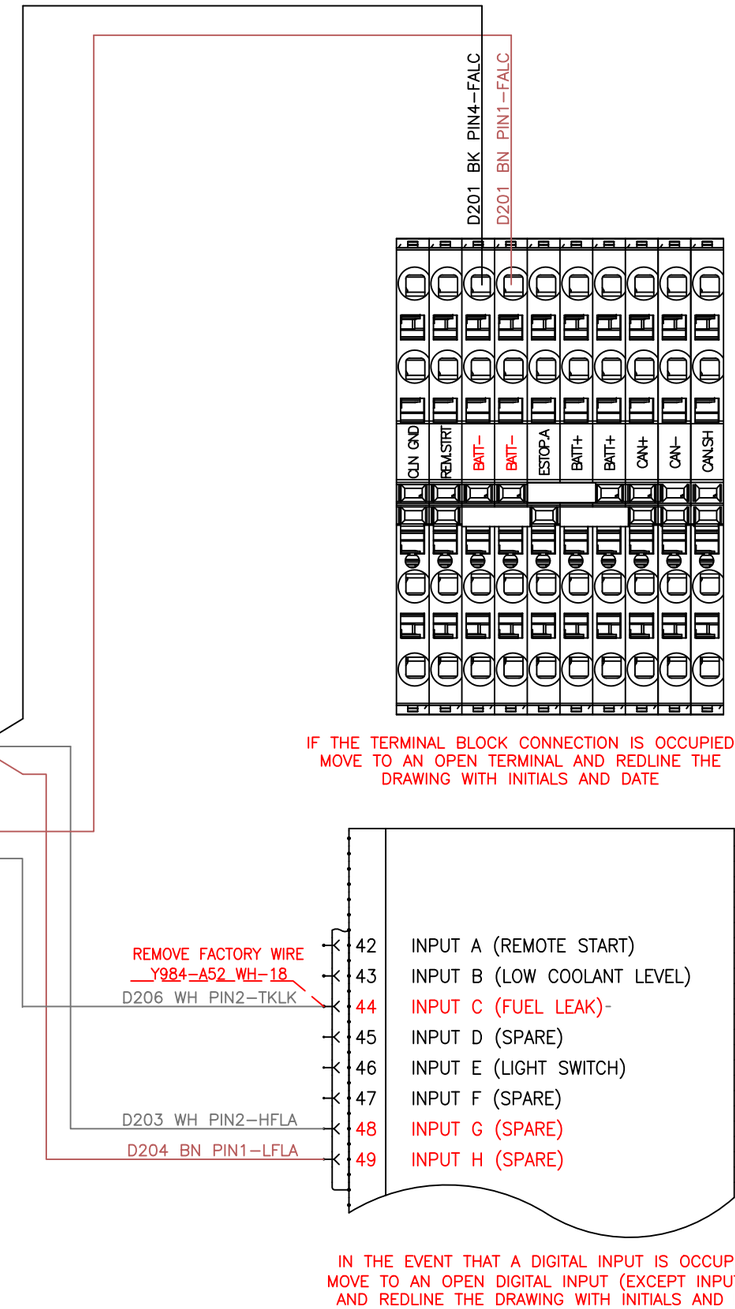

REV#	DESCRIPTION	BY	DATE:
REV-A	ELECTRICAL SUBMITTAL BASED ON QUOTE DATE 10/24/25	ZDB	1/20/26
REV-B	ADDED MPU, SS E-STOPS, 2ND TIMER & 4TH DC LIGHT	ZDB	4/17/26
REV-C	UPDATED MPU TO SS AND SHIPPED LOOSE	ZDB	5/27/26

CUSTOMER/ PROJECT TYPE: GSDW-350 ASAEST CAT C4.4GC 60kW
TANK LABEL: ☐UL-142 ☐UL-2085
F.D.E.P. CERTIFICATION NOS. ☐EQ-013 ☐EQ-625 ☐EQ-821

RING POWER CORP.
10421 YERKS HILL DR
RIVERVIEW, FL 33578

JOB# 25-519309

DRAWN BY:	ZDB
CHECKED BY:	STB
DATE:	1/30/2026
SCALE:	N.T.S.

PHOENIX PRODUCTS
1977 BINNEY STREET
JACKSONVILLE, FLORIDA 32206

C.O.T. STORM WATER LAKE BOXES
FLORIDA

COPYRIGHT © 2014, PHOENIX PRODUCTS, ALL RIGHTS RESERVED

Phoenix Products

E11

13OF13

COPYRIGHT © PHOENIX PRODUCTS, 2014. ALL RIGHTS RESERVED

4

GENERAL INFORMATION

DIVISION OF RESPONSIBILITIES

CONTRACTOR'S RESPONSIBILITIES

EQUIPMENT DELIVERY

- Ring Power will provide delivery to jobsite ONLY. Offloading, including cranes, rigging and spreader bars are the contractor's responsibility.
- Equipment shall be delivered at one time. Additional deliveries for items such as transfer switches may be subject to additional charges.
- Deliveries shall be made on weekdays during regular business hours. Special delivery arrangements can be made, but may be subject to additional charges.

INSTALLATION

- FOUNDATION
  - Equipment shall be set on a foundation designed and constructed according to load requirements and soil conditions.
  - Vibration isolators, if applicable, must be adjusted prior to piping/wiring interconnection.

- WIRING
  - Supply and terminate all interconnecting control wiring between generator set, automatic transfer switch, battery charger, fuel tank, etc.
  - Control wiring shall be stranded conductor.
  - Supply and terminate load cables. Lugs are not provided unless specifically called out.
  - Supply and terminate AC power to AC powered accessories. Power must be available, but this equipment should not be energized prior to arrival of Ring Power personnel.
  - Control wiring must be run in separate conduit from power wiring.

- FUEL SYSTEM
  - Provide an adequate supply of high quality fuel for start up and load bank testing. Fuel shall be low sulfur #2 diesel fuel.

START-UP PROCEDURE

- Request start-up by completing and faxing the Request for Start-Up Checklist included with this submittal. Completion of the Request for Start-Up Checklist is mandatory prior to scheduling start-up.
- Scheduling start-up will require at least one (1) week after completion of the Request for Start-Up Checklist.
- Start-up activities shall be limited to those specified or those included in Caterpillar start-up procedures. Exception is taken to any specifications that are contradictory or in conflict with Caterpillar or Ring Power procedures and guidelines.
- Additional visits, delays or extensions of standard start-up activities due to incomplete site preparation will result in additional charges.
- Additional visits, delays or extensions of standard start-up activities due to failure of equipment outside of Ring Power's scope will result in additional charges.
- Start-up shall be performed on weekdays during regular business hours. Special start-up arrangements are available with advance notice and at additional charges.

RING POWER'S RESPONSIBILITIES

EQUIPMENT DELIVERY

- Provide delivery to jobsite – offloading by others.

INSTALLATION

- Provide engineering of all equipment provided in Ring Power's Scope of Supply, including design information and submittal drawings.
- Provide installation and engineering support.
- Provide Operation and Maintenance Manual(s) upon completion of testing. Allow two weeks minimum for completion of Operation and Maintenance Manual(s) after start-up has been completed.
- Ring Power will provide the manual quantities listed on the Sales Quote.

START-UP

- Schedule start-up upon receipt of the Request for Start-Up Checklist.
- Start-up shall be performed on weekdays during regular business hours. Special start-up arrangements are available with advance notice and at additional charges.
- Inspect all interconnecting control wiring.
- Inspect load cable termination.
- Inspect AC power terminations and authorize contractor to energize the AC powered options.
- Inspect fuel system installation.
- Inspect exhaust system installation.
- Perform start-up per Caterpillar Start-Up Procedures and Specifications. Exception is taken to any specifications that are contradictory or in conflict with Caterpillar or Ring Power procedures or guidelines.
- Check all control functions and safeties and verify system performance.
- Perform load test if called out in sales documents.
- Conduct training session with owner's representative.

REQUEST FOR START-UP CHECKLIST

JOB NO: **251550**

JOB NAME: **STORM WATER lake Eckles**

START-UP PROCEDURE IS AS FOLLOWS:

1. COMPLETE AND EMAIL THIS "REQUEST FOR START-UP CHECKLIST" TO Zachary Rogers PROJECT MANAGER, AT
2. Zachary.Rogers@ringpower.com, OR FAX TO (904) 281-0831.

   UPON RECEIPT, START-UP WILL BE SCHEDULED. PLEASE ALLOW AT LEAST ONE WEEK'S NOTICE FOR SCHEDULING.

PLEASE CONFIRM THAT THE FOLLOWING ARE COMPLETED. ALL ITEMS BELOW MUST BE COMPLETED PRIOR TO REQUESTING START-UP.

CUSTOMER RESPONSIBILITY:

_____ COMMERCIAL POWER AVAILABLE AND TERMINATED AT TRANSFER SWITCH

_____ POWER CABLES TERMINATED AT GENERATOR SET AND TRANSFER SWITCH

_____ LOAD CABLES FROM BUILDING TERMINATED AT TRANSFER SWITCH

_____ CONTROL WIRING TERMINATED AT GENERATOR SET AND TRANSFER SWITCH

_____ REMOTE ALARM MODULE WIRING IS TERMINATED AT BOTH ENDS

_____ FUEL SYSTEM INSTALLED AND CONNECTED

_____ ADEQUATE SUPPLY OF GOOD QUALITY FUEL

_____ EXHAUST SYSTEM INSTALLED AND CONNECTED

_____ CUSTOMER SUPPLIED CIRCUIT FOR GENERATOR ACCESSORIES TERMINATED AT GENERATOR SET *(DO NOT APPLY POWER UNTIL VERIFIED BY RING POWER REPRESENTATIVE)*

****NOTE**** ALL SUPPORT EQUIPMENT MUST BE ON A CRITICAL CIRCUIT.
DO NOT ENERGIZE SUPPORT ITEMS UNTIL THEY HAVE BEEN INSPECTED FOR PROPER CONNECTION BY A RING POWER REPRESENTATIVE.

PLEASE PROVIDE THE FOLLOWING INFORMATION*:*

JOBSITE CONTACT: _____

JOBSITE PHONE NUMBER: _____

JOBSITE FAX NUMBER: _____

FORM COMPLETION DATE: _____

REQUESTED START-UP DATE: _____

Zachary Rogers
PROJECT MANAGER
ELECTRIC POWER
(904) 837-3717 | (904) 281-0831 FAX
Zachary.Rogers@ringpower.com

Ring Power CAT
Power Systems Division

Foundations

The major functions of a foundation are to:

- Support total weight of equipment, accessory equipment and fluids (coolant, oil and fuel)
- Maintain alignment between engine, driven equipment, and accessory equipment
- Isolate equipment vibration from surrounding structures.

Responsibility

The equipment foundation and the driven equipment attachment to the foundation are not the responsibility of Caterpillar. The customer or customer's agent, familiar with local site conditions and application requirements, bears foundation design responsibility. Foundation comments published herein are intended only as general guidelines for consideration. Further engine foundation general guidelines can be found in the appropriate Engine Data Sheet.

Ground Loading

Initial considerations include equipment weight and material supporting this weight. The wet weight of the total package must be calculated. This includes accessory equipment and weight of all liquids (coolant, oil, and fuel) supported by the foundation. Dry weights of engine and attachments can be found in the price list. Liquid densities are given in the following table.

Liquid	kg/m^3	lb/U.S. gal	lb/ft^3	Specific Gravity
Water, Fresh	1994.6	8.31	62.1	1.001
Water, Sea	1018.3	8.51	63.6	1.021
Water/ Glycol	1024.4	8.55	64.0	1.031
Diesel Fuel	1850.7	7.11	53.1	0.855
Lube Oil	1909.7	7.61	56.8	0.916
Kerosene	1802.7	6.71	50.1	0.807

Material supporting the foundation must carry the total weight. The table below shows the bearing load capabilities of common materials.

Material	Safe Bearing Load kPa (psi)
Rock, Hardpan	482.6 (70)
Hard Clay, Gravel and Coarse Sand	386 (56)
Loose Medium Sand and Medium Clay	193 (28)
Loose Fine Sand	96.5 (14)
Soft Clay	0-96.5 (0-14)

Firm level soil, gravel, or rock provides satisfactory support for single-bearing generator sets used in stationary or portable service. This support can be used where the weight-bearing capacity of the supporting material exceeds pressure exerted by the equipment package, and where alignment with external machinery is unimportant.

© 2008 Caterpillar®
All rights reserved.

Soil, such as fine clay, loose sand, or sand near the ground water level, is particularly unstable under dynamic loads and requires substantially larger foundations. Information concerning bearing capacity of soils at the site may be available from local sources and must comply with local building codes.

The area of load-bearing support is adjusted to accommodate surface material. To determine pressure (P) exerted by the generator set, divide total weight (W) by total surface area (A) of the rails, pads, or vibration mounts. Refer to **Figure 36**.

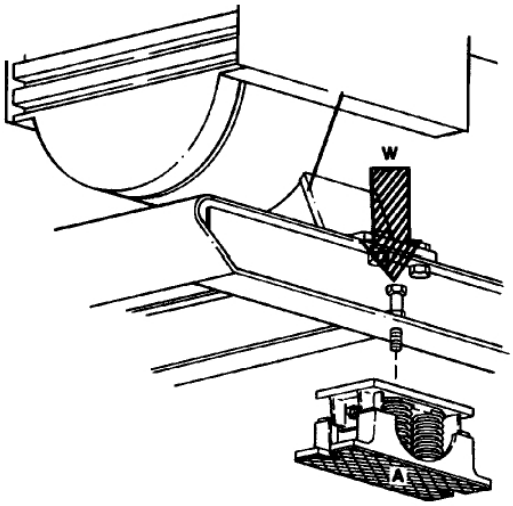

Figure 36

$$P = W \div A$$

Where:

P = pressure in (psi)

W = weight in (lb)

A = area in (in^2)

Pressure imposed by the weight of the equipment must be less than the load-carrying capacity of supporting material.

Where support rails or mounting feet have insufficient bearing area, flotation pads can distribute the weight. The underside area and stiffness of the pad must be sufficient to support the equipment.

Seasonal and weather changes adversely affect mounting surfaces. Soil changes considerably while freezing and thawing. To avoid movement from seasonal change, extend foundations below the frost line.

Concrete

Several basic foundations are applicable for Caterpillar equipment. The foundation chosen will depend on factors previously outlined as well as limitations imposed by the specific location and application.

Massive concrete foundations are normally unnecessary for modern multi-cylinder medium speed engines and packaged units. Avoid excessively thick, heavy bases to minimize sub floor or soil loading. Bases should be only thick enough to prevent deflection and torque reaction, while retaining sufficient surface area for support. Non-parallel units require no foundation anchoring.

© 2008 Caterpillar®
All rights reserved.

If a concrete foundation is required, minimum design guidelines include:

- Strength must support wet weight of units plus dynamic loads. The dynamic load can be calculated using the allowable centerline vibration limits and the equipment mass.
- Depth sufficient to attain a minimum weight equal to equipment wet weight (only if large mass, i.e. inertia block, is specified for vibration control).
- The mass of the foundation should be no less than the mass of the equipment.
- Outside dimensions exceed that of the equipment, a minimum of 305 mm (12 in) on all sides.
- When effective vibration isolation equipment is used, figure depth of floor concrete needed for structural support of the static load. If isolators are not used, dynamic loads transmit to the facility floor and require the floor to support 125 percent of the generator set weight.
- If generator sets are paralleled, possible out-of-phase paralleling and resulting torque reactions demand stronger foundations. The foundation must withstand twice the wet weight of the generator set. Bolting the set to the foundation is recommended.

Estimate foundation depth that will accommodate equipment weight using the formula:

$$FD = W \div (D \times B \times L)$$

Where:

FD = Foundation depth in m (ft)

W = Total wet weight of equipment in kg (lb)

D = Density of concrete in kg/m^2 (lb/ft^2)

Note: Use 2402.8 for metric units and 150 for English units.

B = Foundation width in m (ft)

L = Foundation length in m (ft)

Suggested concrete mixture by volume is 1:2:3 of cement, sand, aggregate, with maximum 102 mm (4 in) slump and 28-day compressive strength of 21 mPa (3000 psi).

Reinforce concrete with No. 8 gauge steel wire mesh, or equivalent, horizontally placed on 152 mm (6 in) centers. An alternative method places No. 6 reinforcing bars on 305 mm (12 in) centers horizontally. Bars must clear foundation surfaces 76 mm (3 in) minimum. Refer to **Figure 37**.

© 2008 Caterpillar®
All rights reserved.

Concrete Foundation Example

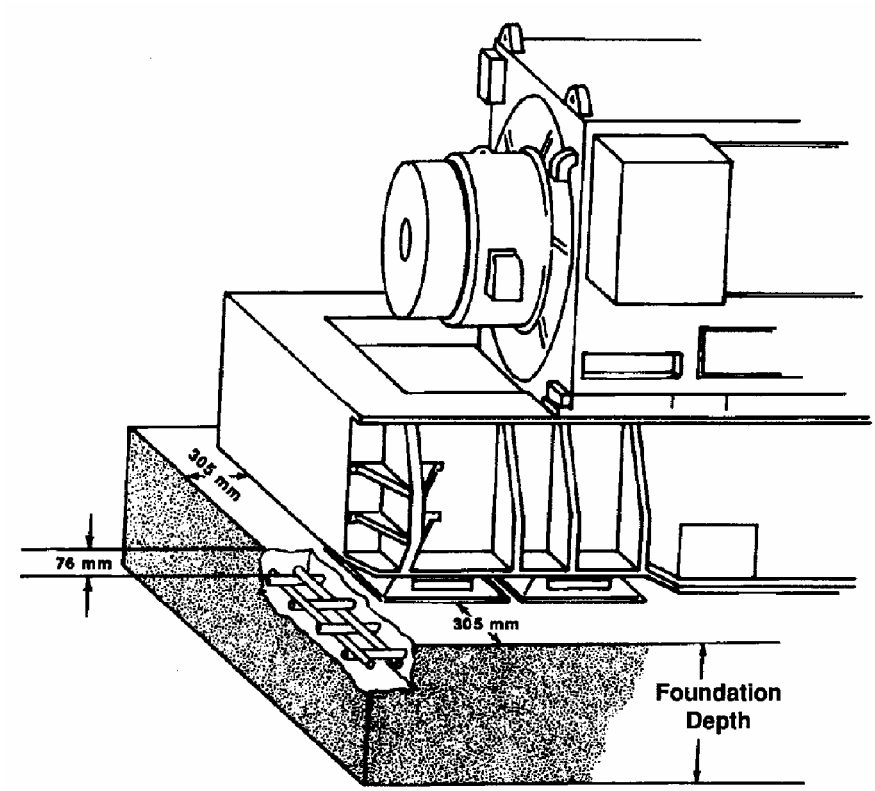

Figure 37

© 2008 Caterpillar®
All rights reserved.

1. Installation Factors

Once the size of the generator set and the required associated control panel and switchgear have been established, plans for installation can be prepared. Proper attention to mechanical and electrical engineering details will assure a satisfactory power system installation.

Factors to be considered in the installation of a generator are:

- Access and maintenance location.
- Floor loading.
- Vibration transmitted to building and equipment.
- Ventilation of room.
- Engine exhaust piping and insulation.
- Noise reduction.
- Method of engine cooling.
- Size and location of diesel fuel tank, or gas supply system.
- Local, national or insurance regulations.
- Smoke and emissions requirements.

2. Moving the Generator Set

The generator set baseframe is specifically designed for ease of moving the set. Improper handling can seriously damage the generator and components.

Using a forklift, the generator set can be lifted or for minor location adjustments pushed/pulled by the baseframe.

NOTE: Never lift the generator set by attaching to the engine or alternator lifting lugs!

For lifting the generator set, lift points are provided on the baseframe. Shackles and chains of suitable length and lifting capacity must be used and a spreader bar is required to prevent damaging the set. See figure 2.1. An optional "single point lifting bale" is available on most diesel generator sets if the generator set will be regularly moved by lifting.

NOTE: The single point lifting eye should only be used to lift a generator set with an empty fuel tank. In all other situations, i.e. with the fuel tank containing fuel, the lifting of the generator set should only take place using the lifting eyes located on the side of the baseframe using the appropriate lifting equipment, including spreader bars, etc. to prevent damage to the generator set.

3. Generator Set Location

The set may be located in the basement or on another floor of the building, on a balcony, in a penthouse on the roof or even in a separate building. Usually it is located in the basement for economics and convenience of operating personnel. The generator room should be large enough to provide adequate air circulation and plenty of working space around the engine and alternator.

If it is necessary to locate the generator set outside the building, it can be furnished enclosed in a housing and mounted on a skid or trailer (for diesel generator sets). This type of assembly is also useful, whether located inside or outside the building, if the installation is temporary. For outside installation the housing is normally "weatherproof". This is necessary to prevent water from entering the alternator compartment if the generator set is to be exposed to rain accompanied by high winds.

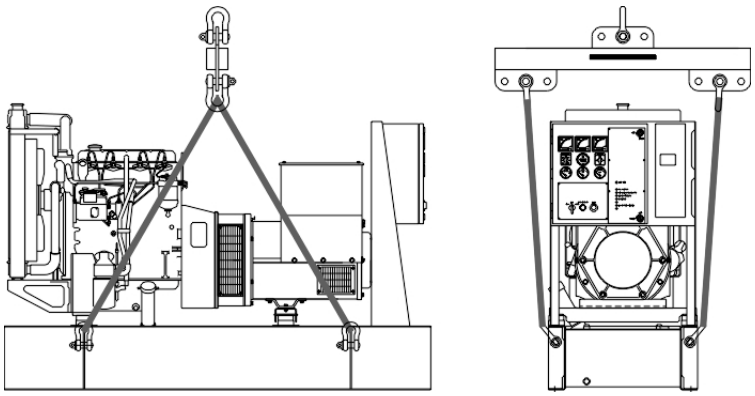

Figure 2.1 Proper Lifting Arrangement

4. Generator Set Mounting

The generator set will be shipped assembled on a rigid base that precisely aligns the alternator and engine and needs merely to be set in place (on vibration isolation pads for larger sets) and levelled. See figure 4.1

4.1 Vibration Isolation

It is recommended that the generator set be mounted on vibration isolation pads to prevent the set from receiving or transmitting injurious or objectionable vibrations. Rubber isolation pads are used when small amounts of vibration transmission is acceptable. Steel springs in combination with rubber pads are used to combat both light and heavy vibrations. On smaller generator sets, these isolation pads should be located between the coupled engine/alternator feet and the baseframe. The baseframe is then securely attached to the floor. On larger sets, the coupled engine/alternator may be rigidly connected to the baseframe with vibration isolation between the baseframe and floor. Other effects of engine vibration can be minimized by providing flexible connections between the engine and fuel lines, exhaust system, radiator air discharge duct, conduit for control and power cables and other externally connected support systems.

4.2 Floor Loading

Floor loading depends on the total generator set weight (including fuel and water) and the number and size of isolator pads. With the baseframe mounted directly on the floor, the floor loading is:

$$\text{Floor Loading} = \frac{\text{Total Generating Set Weight}}{\text{Area of Skids}}$$

With vibration isolation between the baseframe and the floor, if the load is equally distributed over all isolators, the floor loading is:

$$\text{Floor Loading} = \frac{\text{Total Generating Set Weight}}{\text{Pad Area x Number of Pads}}$$

Thus, floor loading can be reduced by increasing the number of isolation pads.

If load is not equally distributed, the maximum floor pressure occurs under the pad supporting the greatest proportion of load (assuming all pads are the same size):

$$\text{Max Floor Pressure} = \frac{\text{Load on Heaviest Loaded Pad}}{\text{Pad Area}}$$

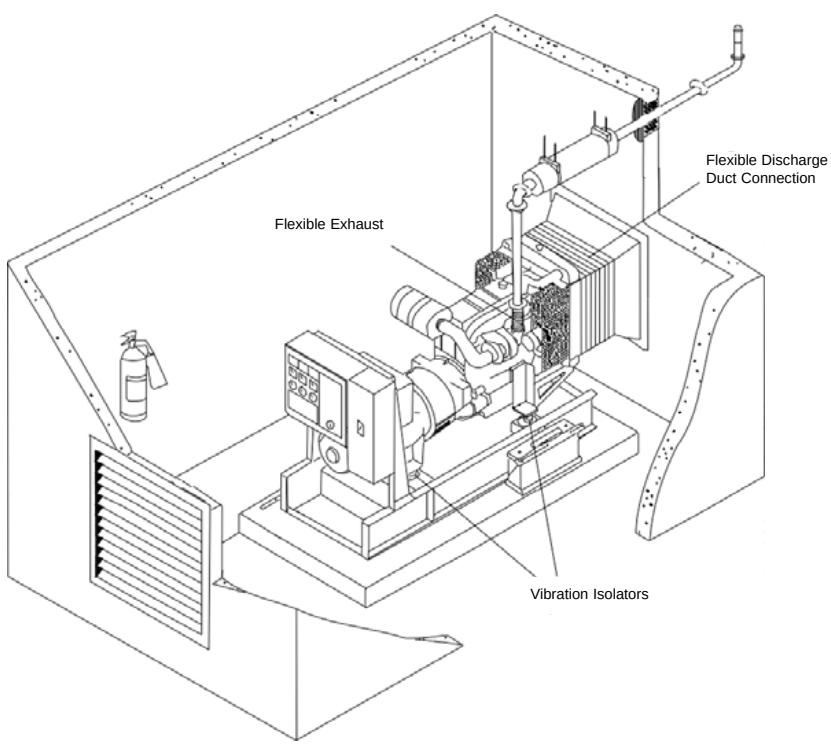

Figure 4.1 Reducing Vibration Transmission

Effective with sales to the first user on or after July 1, 2023

CATERPILLAR LIMITED WARRANTY

Industrial, Petroleum, Locomotive, and Agriculture Engine Products and Electric Power Generation Products

Worldwide

Caterpillar Inc. or any of its subsidiaries ("Caterpillar") warrants new and remanufactured engines and electric power generation products (new and new with Cat Reman Engines) sold by it (including any products of other manufacturers packaged and sold by Caterpillar), to be free from defects in material and workmanship.

This warranty does not apply to engines sold for use in on-highway vehicle or marine applications; engines in machines manufactured by or for Caterpillar; C175, 3500 and 3600 series engines used in locomotive applications; 3000 Family engines, C0.5 through C4.4 and ACERT™ (C6.6, C7, C7.1, C9, C9.3, C11, C13, C15, C18, C27, and C32) engines used in industrial, mobile agriculture and locomotive applications; or Cat® batteries; or Electric Power Generation products manufactured or assembled and sold in India except GC models, which are covered by this warranty. These products (except for GC models) are covered by other Caterpillar warranties.

This warranty is subject to the following:

Warranty Period

- For industrial engines, engines in a petroleum applications or Petroleum Power Systems (excluding petroleum fire pump application), or engines in a Locomotive application, or Uninterruptible Power Supply (UPS) systems, the warranty period is 12 months after date of delivery to the first user.
- For engines used in petroleum fire pump and mobile agriculture applications the warranty period is 24 months after date of delivery to the first user.
- For controls only (EPIC), configurable and custom switchgear products, and automatic transfer switch products, the warranty period is 24 months after date of delivery to the first user.
- For new CG132, CG170 and CG260 series power generation products the warranty period is 24 months after date of delivery to first user, but not to exceed 36 months from shipment from the Caterpillar place of manufacture.
- For electric power generation products other than CG132, CG170 and CG260 series in prime or continuous applications the warranty period is 12 months. For standby applications the warranty period is 24 months/1000 hours. For emergency standby applications the warranty period is 24 months/400 hours. All terms begin after date of delivery to the first user.
- For all other applications the warranty period is 12 months after date of delivery to the first user.

Caterpillar Responsibilities

If a defect in material or workmanship is found during the warranty period, Caterpillar will, during normal working hours and at a place of business of a Cat dealer or other source approved by Caterpillar:

- Provide (at Caterpillar's choice) new, Remanufactured, or Caterpillar approved repaired parts or assembled components needed to correct the defect.

Note: New, remanufactured, or Caterpillar approved repaired parts or assembled components provided under the terms of this warranty are warranted for the remainder of the warranty period applicable to the product in which installed as if such parts were original components of that product. Items replaced under this warranty become the property of Caterpillar.

- Replace lubricating oil, filters, coolant, and other service items made unusable by the defect.
- Provide reasonable and customary labor needed to correct the defect, including labor to disconnect the product from and reconnect the product to its attached equipment, mounting, and support systems, if required.

For new 3114, 3116, and 3126 engines and, new and Caterpillar rebuild electric power generation products (which includes the following: any new products of other manufacturers packaged and sold by Caterpillar)

- Provide travel labor, up to four hours round trip, if in the opinion of Caterpillar, the product cannot reasonably be transported to a place of business of a Cat dealer or other source approved by Caterpillar (travel labor in excess of four hours round trip, and any meals, mileage, lodging, etc. is the user's responsibility).

For all other products:

- Provide reasonable travel expenses for authorized mechanics, including meals, mileage, and lodging, when Caterpillar chooses to make the repair on-site.

User Responsibilities

The user is responsible for:

- Providing proof of the delivery date to the first user.
- Labor costs, except as stated under "Caterpillar Responsibilities," including costs beyond those required to disconnect the product from and reconnect the product to its attached equipment, mounting, and support systems.
- Travel or transporting costs, except as stated under "Caterpillar Responsibilities."
- Premium or overtime labor costs.
- Parts shipping charges in excess of those that are usual and customary.
- Local taxes, if applicable.
- Costs to investigate complaints, unless the problem is caused by a defect in Caterpillar material or workmanship.
- Giving timely notice of a warrantable failure and promptly making the product available for repair.
- Performance of the required maintenance (including use of proper fuel, oil, lubricants, and coolant) and items replaced due to normal wear and tear.
- Allowing Caterpillar access to all electronically stored data.

Limitations

Caterpillar is not responsible for:

- Failures resulting from any use or installation that Caterpillar judges improper.
- Failures resulting from attachments, accessory items, and parts not sold or approved by Caterpillar.
- Failures resulting from abuse, neglect, and/or improper repair.
- Failures resulting from user's delay in making the product available after being notified of a potential product problem.
- Failures resulting from unauthorized repairs or adjustments, and unauthorized fuel setting changes.
- Damage to parts, fixtures, housings, attachments, and accessory items that are not part of the engine, Cat Selective Catalytic Reduction System or electric power generation product (including any products of other manufacturers packaged and sold by Caterpillar).
- Repair of components sold by Caterpillar that is warranted directly to the user by their respective manufacturer. Depending on type of application, certain exclusions may apply. Consult your Cat dealer for more information.

(Continued on reverse side…)

This warranty covers every major component of the products. Claims under this warranty should be submitted to a place of business of a Cat dealer or other source approved by Caterpillar. For further information concerning either the location to submit claims or Caterpillar as the issuer of this warranty, write Caterpillar Inc., 100 N.E. Adams St., Peoria, IL USA 61629, telephone 1 (309) 675-1000, or go to URL, www.cat.com, Find Your Dealer.

Caterpillar's obligations under this Limited Warranty are subject to, and shall not apply in contravention of, the laws, rules, regulations, directives, ordinances, orders, or statutes of the United States, or of any other applicable jurisdiction, without recourse or liability with respect to Caterpillar.

A) For products operating outside of Australia, Fiji, Nauru, New Caledonia, New Zealand, Papua New Guinea, the Solomon Islands, and Tahiti, the following is applicable:

NEITHER THE FOREGOING EXPRESS WARRANTY NOR ANY OTHER WARRANTY BY CATERPILLAR, EXPRESS OR IMPLIED, IS APPLICABLE TO ANY ITEM CATERPILLAR SELLS THAT IS WARRANTED DIRECTLY TO THE USER BY ITS MANUFACTURER.

THIS WARRANTY IS EXPRESSLY IN LIEU OF ANY OTHER WARRANTIES, EXPRESS OR IMPLIED, INCLUDING ANY WARRANTY OF MERCHANTABILITY OR FITNESS FOR A PARTICULAR PURPOSE, EXCEPT CATERPILLAR EMISSION-RELATED COMPONENT WARRANTIES FOR NEW ENGINES, WHERE APPLICABLE. REMEDIES UNDER THIS WARRANTY ARE LIMITED TO THE PROVISION OF MATERIAL AND SERVICES, AS SPECIFIED HEREIN.

CATERPILLAR IS NOT RESPONSIBLE FOR INCIDENTAL OR CONSEQUENTIAL DAMAGES.

CATERPILLAR EXCLUDES ALL LIABILITY FOR OR ARISING FROM ANY NEGLIGENCE ON ITS PART OR ON THE PART OF ANY OF ITS EMPLOYEES, AGENTS, OR REPRESENTATIVES IN RESPECT OF THE MANUFACTURE OR SUPPLY OF GOODS OR THE PROVISION OF SERVICES RELATING TO THE GOODS.

IF OTHERWISE APPLICABLE, THE VIENNA CONVENTION ON CONTRACTS FOR THE INTERNATIONAL SALE OF GOODS IS EXCLUDED IN ITS ENTIRETY.

For personal or family use engines or electric power generation products, operating in the USA, its territories and possessions, some states do not allow limitations on how long an implied warranty may last nor allow the exclusion or limitation of incidental or consequential damages. Therefore, the previously expressed exclusion may not apply to you. This warranty gives you specific legal rights and you may also have other rights, which vary by jurisdiction. To find the location of the nearest Cat dealer or other authorized repair facility, call (800) 447-4986. If you have questions concerning this warranty or its applications, call or write:

In USA and Canada: Caterpillar Inc, 100 N.E. Adams St., Peoria, IL USA 61629, Attention: Customer Service Manager, Telephone 1 (309) 675-1000. Outside the USA and Canada: Contact your Cat dealer, go to URL, www.cat.com, Find Your Dealer.

B) For products operating in Australia, Fiji, Nauru, New Caledonia, New Zealand, Papua New Guinea, the Solomon Islands, and Tahiti, the following is applicable:

THIS WARRANTY IS IN ADDITION TO WARRANTIES AND CONDITIONS IMPLIED BY STATUTE AND OTHER STATUTORY RIGHTS AND OBLIGATIONS THAT BY ANY APPLICABLE LAW CANNOT BE EXCLUDED, RESTRICTED, OR MODIFIED ("MANDATORY RIGHTS"). ALL OTHER WARRANTIES OR CONDITIONS, EXPRESS OR IMPLIED (BY STATUTE OR OTHERWISE), ARE EXCLUDED. WITHOUT LIMITING THE FOREGOING PROVISIONS OF THIS PARAGRAPH, WHERE A PRODUCT IS SUPPLIED FOR BUSINESS PURPOSES, THE CONSUMER GUARANTEES UNDER THE CONSUMER GUARANTEES ACT 1993 (NZ) WILL NOT APPLY.

NEITHER THIS WARRANTY NOR ANY OTHER CONDITION OR WARRANTY BY CATERPILLAR, EXPRESS OR IMPLIED (SUBJECT ONLY TO THE MANDATORY RIGHTS), IS APPLICABLE TO ANY ITEM CATERPILLAR SELLS THAT IS WARRANTED DIRECTLY TO THE USER BY ITS MANUFACTURER.

IF THE MANDATORY RIGHTS MAKE CATERPILLAR LIABLE IN CONNECTION WITH SERVICES OR GOODS, THEN TO THE EXTENT PERMITTED UNDER THE MANDATORY RIGHTS, THAT LIABILITY SHALL BE LIMITED AT CATERPILLAR'S OPTION TO (a) IN THE CASE OF SERVICES, THE SUPPLY OF THE SERVICES AGAIN OR THE PAYMENT OF THE COST OF HAVING THE SERVICES SUPPLIED AGAIN AND (b) IN THE CASE OF GOODS, THE REPAIR OR REPLACEMENT OF THE GOODS, THE SUPPLY OF EQUIVALENT GOODS, THE PAYMENT OF THE COST OF SUCH REPAIR OR REPLACEMENT OR THE ACQUISITION OF EQUIVALENT GOODS.

CATERPILLAR EXCLUDES ALL LIABILITY FOR OR ARISING FROM ANY NEGLIGENCE ON ITS PART OR ON THE PART OF ANY OF ITS EMPLOYEES, AGENTS OR REPRESENTATIVES IN RESPECT OF THE MANUFACTURE OR SUPPLY OF GOODS OR THE PROVISION OF SERVICES RELATING TO THE GOODS.

CATERPILLAR IS NOT LIABLE FOR INCIDENTAL OR CONSEQUENTIAL DAMAGES UNLESS IMPOSED UNDER MANDATORY RIGHTS.

IF OTHERWISE APPLICABLE, THE VIENNA CONVENTION ON CONTRACTS FOR THE INTERNATIONAL SALE OF GOODS IS EXCLUDED IN ITS ENTIRETY.

C) For products supplied in Australia:

IF THE PRODUCTS TO WHICH THIS WARRANTY APPLIES ARE:

> **I. PRODUCTS OF A KIND ORDINARILY ACQUIRED FOR PERSONAL, DOMESTIC OR HOUSEHOLD USE OR CONSUMPTION; OR**
>
> **II. PRODUCTS THAT COST AUD 100,000 OR LESS,**

WHERE THOSE PRODUCTS WERE NOT ACQUIRED FOR THE PURPOSE OF RE-SUPPLY OR FOR THE PURPOSE OF USING THEM UP OR TRANSFORMING THEM IN THE COURSE OF PRODUCTION OR MANUFACTURE OR IN THE COURSE OF REPAIRING OTHER GOODS OR FIXTURES, THEN THIS SECTION C APPLIES.

THE FOLLOWING MANDATORY TEXT IS INCLUDED PURSUANT TO THE AUSTRALIAN CONSUMER LAW AND INCLUDES REFERENCES TO RIGHTS THE USER MAY HAVE AGAINST THE DIRECT SUPPLIER OF THE PRODUCTS: OUR GOODS COME WITH GUARANTEES THAT CANNOT BE EXCLUDED UNDER THE AUSTRALIAN CONSUMER LAW. YOU ARE ENTITLED TO A REPLACEMENT OR REFUND FOR A MAJOR FAILURE AND COMPENSATION FOR ANY OTHER REASONABLY FORESEEABLE LOSS OR DAMAGE. YOU ARE ALSO ENTITLED TO HAVE THE GOODS REPAIRED OR REPLACED IF THE GOODS FAIL TO BE OF ACCEPTABLE QUALITY AND THE FAILURE DOES NOT AMOUNT TO A MAJOR FAILURE. THE INCLUSION OF THIS TEXT DOES NOT CONSTITUTE ANY REPRESENTATION OR ACCEPTANCE BY CATERPILLAR OF LIABILITY TO THE USER OR ANY OTHER PERSON IN ADDITION TO THAT WHICH CATERPILLAR MAY HAVE UNDER THE AUSTRALIAN CONSUMER LAW.

TO THE EXTENT THE PRODUCTS FALL WITHIN THIS SECTION C BUT ARE NOT OF A KIND ORDINARILY ACQUIRED FOR PERSONAL, DOMESTIC OR HOUSEHOLD USE OR CONSUMPTION, CATERPILLAR LIMITS ITS LIABILITY TO THE EXTENT IT IS PERMITTED TO DO SO UNDER THE AUSTRALIAN CONSUMER LAW TO, AT ITS OPTION, THE REPAIR OR REPLACEMENT OF THE PRODUCTS, THE SUPPLY OF EQUIVALENT PRODUCTS, OR THE PAYMENT OF THE COST OF SUCH REPAIR OR REPLACEMENT OR THE ACQUISITION OF EQUIVALENT PRODUCTS.

THE WARRANTY SET OUT IN THIS DOCUMENT IS GIVEN BY CATERPILLAR INC. OR ANY OF ITS SUBSIDIARIES, 100 N. E. ADAMS ST, PEORIA, IL USA 61629, TELEPHONE 1 309 675 1000,THE USER IS RESPONSIBLE FOR ALL COSTS ASSOCIATED WITH MAKING A CLAIM UNDER THE WARRANTY SET OUT IN THIS DOCUMENT, EXCEPT AS EXPRESSLY STATED OTHERWISE IN THIS DOCUMENT, AND THE USER IS REFERRED TO THE BALANCE OF THE DOCUMENT TERMS CONCERNING CLAIM PROCEDURES, CATERPILLAR RESPONSIBILITIES AND USER RESPONSIBILITIES.

TO THE EXTENT PERMISSIBLE BY LAW, THE TERMS SET OUT IN THE REMAINDER OF THIS WARRANTY DOCUMENT (INCLUDING SECTION B) CONTINUE TO APPLY TO PRODUCTS TO WHICH THIS SECTION C APPLIES.

© 2023 Caterpillar. All Rights Reserved.
CAT, CATERPILLAR, LET'S DO THE WORK,
their respective logos, "Caterpillar Corporate Yellow", the "Power Edge" and Cat "Modern Hex"
trade dress as well as corporate and product identity used herein, are trademarks of Caterpillar and may not be used without permission.

ELECTRIC POWER EXTENDED SERVICE COVERAGE

Backed by the Power of Cat

Whether you need Prime Power or Standby, you can protect your Electric Power solution with Extended Service Coverage (ESC) from the Caterpillar® dealer network.

Your ESC provides 100 percent of usual and customary parts and labor costs for engine failures due to defect in materials and workmanship on covered components.

COVERAGE THAT IS RIGHT FOR YOU

Prime Power Coverage

Platinum coverage - this includes all original factory equipment with Cat part numbers, excluding consumables such as filters, hoses and belts.

Standby Power Coverage

Select the level of coverage that meets your need.
Silver coverage includes a wide range of covered components and you have confidence that ESC repairs will be done by trained professionals who use genuine Cat® parts.
Gold coverage includes all the same items as silver, as well as turbochargers, injectors and water pumps.
Platinum coverage for Standby units (over three liters) also covers generator rental expenses up to $20,000 per occurrence, if the unit is down for more than 48 hours for a covered repair.

Extended Service Coverage for Electric Power is available everywhere in the world. So whether your unit remains in one location or is mobile around the globe, the Cat dealer network is available to serve you.

COVERAGE AVAILABLE FOR THE LONG TERM

An ESC from the Caterpillar dealer network can protect your Electric Power unit for up to 5 years. You can choose from a variety of coverage terms.

COVERAGE FOR YOUR FULLY INTEGRATED CAT POWER SOLUTION

You turn to Cat for a total Electric Power solution, and you can select an ESC to cover it. See your Cat dealer today.

CATERPILLAR®

© 2009 Caterpillar. All rights reserved. Printed in the U.S.A.

CAT® EXTENDED SERVICE COVERAGE (ESC)
2013 Cat Electric Power Standby
Quick Reference Guide

Covered Components List

Coverage Items	Silver	Gold	Platinum+
COOLING SYSTEM			
Thermostat Housing	✓	✓	✓
Water Manifold Housing	✓	✓	✓
Jacket Water Precooler	✓	✓	✓
Jacket Water Pump		✓	✓
Thermostat			✓
Radiator & Fan			✓
FUEL SYSTEM			
Steel Fuel Lines	✓	✓	✓
Fuel Shutoff Solenoid	✓	✓	✓
Fuel Injectors		✓	✓
Fuel Transfer Pump & Housing			✓
Fuel Priming Pump			✓
Fuel Shutoff Solenoid			✓
LUBRICATION SYSTEM			
Oil Pan	✓	✓	✓
Engine Oil Pump	✓	✓	✓
Oil Cooler Housing & Core / Bonnet	✓	✓	✓
Oil Filter Base	✓	✓	✓
Crankcase Breather			✓
Engine Oil Pump Drive			✓
Prelubrication Pump			✓
ELECTRIC SYSTEM			
Control Module (ECM)	✓	✓	✓
Sensors: All	✓	✓	✓
Wiring Harness & Connectors			✓
Starter			✓
Alternator			✓
ALTENATOR END			
Alternator (including rotor, stator, exciter, bearings & coupling)	✓	✓	✓
Generator Controls (including EMCP, Operator Interface Mounted on Generator)		✓	✓
Power Center (Circuit Breakers, Voltage Regulators, Bus Bar)		✓	✓
FRONT AND REAR COVERS			
Front Cover / Plate / Housing / Gears (& Gaskets)	✓	✓	✓
Vibration Damper	✓	✓	✓
Flywheel Housing & Gasket	✓	✓	✓
Crankshaft Front & Rear Seal			✓

Item	Silver	Gold	Platinum+
AIR INDUCTION & EXHAUST			
Exhaust Manifolds, Studs & Gaskets	✓	✓	✓
Inlet Air Heater Relay	✓	✓	✓
Intake Manifold	✓	✓	✓
Turbocharger (mounting hardware, lines, waste gaste)		✓	✓
Air to Air Aftercooler Cores			✓
Muffler / Exhaust System			✓
Exhaust Guards			✓
SHORT BLOCK			
Cylinder Block Casting	✓	✓	✓
Freeze Plug	✓	✓	✓
Crankshaft	✓	✓	✓
Crankshaft Rod, Main & Thrust Bearings	✓	✓	✓
Connecting Rod Assembly	✓	✓	✓
Piston, Wrist Pin, Retainer Clip, & Piston Rings	✓	✓	✓
Oil Jet Tubes	✓	✓	✓
Cylinder Liner, Seals & Filler Band	✓	✓	✓
Main Bearing Cap Bolt	✓	✓	✓
Idler Gears			✓
Timing Gears			✓
Accessory Drive			✓
CYLINDER HEAD			
Cylinder Head Casting, Sleeves, Bolts & Gaskets	✓	✓	✓
Freeze Plug	✓	✓	✓
Spacer Plate & Spacer Plate Gasket	✓	✓	✓
Intake and Exhaust Valve (all related components)	✓	✓	✓
Valve Mechanism	✓	✓	✓
Valve Cover & Base	✓	✓	✓
Camshaft, Camshaft Bearings, Key, Gear	✓	✓	✓
Camshaft Rear Cover / Seal	✓	✓	✓
MISCELLANEOUS			
Broken nuts/bolts attaching a covered component	✓	✓	✓
Dipstick & tube			✓
Starter Ring Gear			✓

***Platinum covers the entire list of Cat© parts as the engine was originally shipped from the Caterpillar factory, excluding consumables.**
+Platinum Plus may also include more Cat parts added to the engine by the Cat Dealer or Original Equipment Manufacturer (OEM).

ESC Timeline

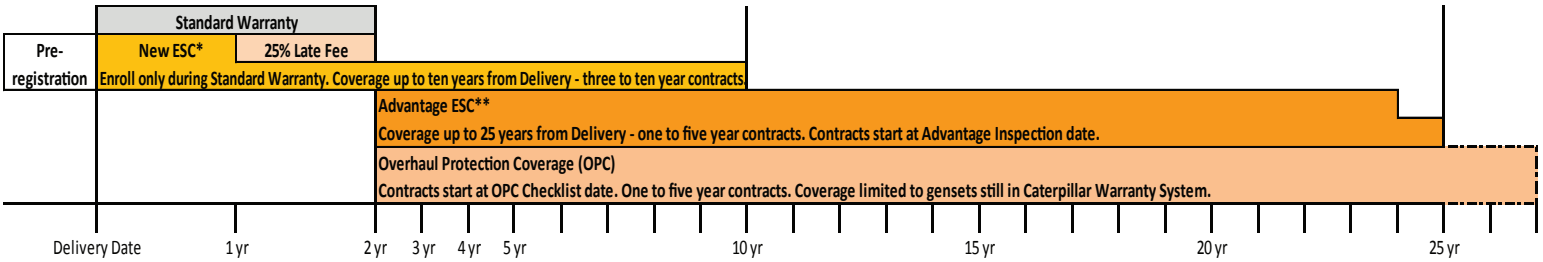

***New ESC coverage always starts on the Delivery Date.**
***Advantage ESC is only available after the end of the Standard Warranty and before the first overhaul.**
+Delivery Date is as stated in Caterpillar Warranty System.

©2013 Caterpillar • All Rights Reserved • Printed in USA
This is a brief description of ESC, it is subject to change without notice. For use by Cat dealers in US and Canada only.
In case of conflicts the ESC contract will govern.
CAT, CATERPILLAR, their respective logos, "Caterpillar Yellow" and the "Power Edge" trade dress, as well as corporate and product identity used herein, are trademarks of Caterpillar and may not be used without permission.

Cat® Extended Service Coverage (ESC)

4 EASY STEPS TO PROTECT YOUR STANDBY GENERATOR SET

Your operation depends on reliable power. That's why you trust Cat® generator sets. With Cat Financial Insurance Services, you get service coverage that's just as durable and long-lasting. ESC for **new, used and overhauled standby generator sets** protects your investment and your peace of mind. Choosing coverage is as easy as following these four steps.

1 CHOOSE FROM A VARIETY OF COVERAGE OPTIONS

First, extend your protection beyond the original factory warranty by choosing the coverage option that's right for your situation.

NEW ESC	Coverage for electric power standby generator sets is available in 36- to 120- month terms, in 12-month increments, if purchased before the end of your original factory warranty.
ADVANTAGE ESC	Coverage is available after the end of the original factory warranty in 12- to 60-month terms, in 12-month increments, and before the first overhaul. Your standby generator set is eligible if: > It's less than four years from delivery date and accumulated less than 3,000 hours total use since new, OR > It's less than 10 years from build date AND currently enrolled in New ESC or Advantage ESC, OR > It's less than 10 years from build date AND currently covered by an authroized Cat dealer Customer Support Agreement (CSA), OR > It passes a qualifying inspection performed by an authorized Cat dealer in accordance with the Advantage Certification Inspection Worksheet.
OVERHAUL PROTECTION FOR COMMERCIAL (OPC) ESC	Coverage is available in 12- to 60- month terms, in 12-month increments. Your standby generator set is eligible once a qualifying overhaul has been completed by an authorized Cat dealer in accordance with the OPC Certification Worksheet.

2 IDENTIFY YOUR COVERAGE NEEDS

Next, identify the age and current operating hours of your generator set since delivery or overhaul. Then calculate your annual hours of use to choose the best ESC coverage terms to fit your needs.

3 SELECT YOUR COVERAGE LEVEL

Then, choose from our Silver, Gold, Platinum or Platinum Plus coverage levels to get the exact amount of protection you need based on the Coverage Matrix[1] and Additional Allowances.

COVERAGE MATRIX[1]

Cooling System	Silver	Gold	Platinum[2]
Thermostat Housing	✓	✓	✓
Water Manifold Housing	✓	✓	✓
Jacket Water Precooler	✓	✓	✓
Jacket Water Pump		✓	✓
Thermostat			✓
Radiator & Fan			✓
Fuel System			
Steel Fuel Lines	✓	✓	✓
Fuel Shutoff Solenoid	✓	✓	✓
Fuel Injectors		✓	✓
Fuel Transfer Pump & Housing			✓
Fuel Priming Pump			✓
Fuel Transfer Pump			✓
Lubrication System			
Pan, Pump Cooler	✓	✓	✓
Crankcase Breather			✓
Engine Oil Pump Drive			✓
Prelubrication Pump			✓
Electric System			
Control Module (ECM)	✓	✓	✓
Sensors: All Engine Sensors	✓	✓	✓
Wiring Harness & Connectors			✓
Starter			✓
Engine Alternator			✓
Alternator End			
Alternator, including Rotor, Stator and Exciter	✓	✓	✓
Generator Controls		✓	✓
Power Center		✓	✓

Air Induction & Exhaust	Silver	Gold	Platinum[2]
Exhaust Manifolds, Studs & Gaskets	✓	✓	✓
Inlet Air Heater Relay	✓	✓	✓
Intake Manifold	✓	✓	✓
Turbocharger(s)		✓	✓
Air-to-Air Aftercooler Cores			✓
Muffler/Exhaust System			✓
Exhaust Guards			✓
Diesel Oxydation Catalyst			✓
Short Block			
Cylinder Block Casting	✓	✓	✓
Crankshaft	✓	✓	✓
Connecting Rod Assembly	✓	✓	✓
Piston, Wrist Pin, Retainer Clip & Piston Rings	✓	✓	✓
Idler and Timing Gears			✓
Accessory Drive			✓
Cylinder Head			
Cylinder Head	✓	✓	✓
Intake & Exhaust Valves	✓	✓	✓
Valve Mechanism	✓	✓	✓
Camshaft, Camshaft Bearings, Key, Gear	✓	✓	✓
Front & Rear Covers			
Front Cover/Plate/Housing/Gears & Gaskets	✓	✓	✓
Vibration Damper	✓	✓	✓
Flywheel Housing & Gasket	✓	✓	✓
Crankshaft Front & Rear Seal			✓
Optional Aftertreatment Coverage			
Diesel Particulate Filter	✓[3]	✓[3]	✓[3]
Selective Catalytic Reduction	✓[3]	✓[3]	✓[3]

1 This Coverage Matrix is for reference only and does not represent a complete list of covered components. For additional information, please reference the appropriate ESC contract.
2 Platinum level coverage covers all as-shipped consist from the factory with Cat part numbers. Some exclusions may apply.
3 Recent emissions-compliant engines or generator sets may be equipped with a Diesel Particulate Filter (DPF) and/or a Selective Catalytic Reduction (SCR). We offer coverage at an additional costs on these emissions components. Silver, Gold, Platinum or Platinum Plus base level coverage is required.

Platinum Plus coverage covers all components covered by Platinum coverage plus additional Cat components, having a Cat part number, installed by an authorized dealer and approved using the Platinum Plus Additional Coverage Component List and Approval Verification form.

ADDITIONAL ALLOWANCES

	Travel/Mileage Limitations		Emergency Freight	Rental[5]		Crane & Rigging[6]	Overtime
Engine Displacement[4]	Silver, Gold, Platinum	Platinum Plus Only	All Coverage Levels	Platinum Only	Platinum Plus Only	Platinum Plus Only	Platinum Plus Only
Up to 4 liters	2 hr/100 mi	10 hr/500 mi	$500	$2,500	$5,000	$1,000	$1,500
Over 4 liters up to 7.5 liters	4 hr/200 mi	10 hr/500 mi	$500	$5,000	$10,000	$1,000	$1,500
Over 7.5 liters up to 34 liters	8 hr/320 mi	10 hr/500 mi	$500	$10,000	$20,000	$5,000	$1,500
Over 34 liters	8 hr/320 mi	10 hr/500 mi	$500	$15,000	$40,000	$12,500	$1,500

4 Please refer to the generator set spec sheets for particular engine displacement.
5 Allowance is granted if covered failure repairs cannot be completed within 96 hours (for Platinum) or 48 hours (for Platinum Plus) of the authorized dealer technician's initial visit.
6 Allowance is granted if covered failure repairs cannot be completed within 48 hours of the authorized dealer technician's initial visit.

4 PURCHASE AND REGISTER YOUR ESC

Finally, work with your local Cat dealer to complete the process—and get the protection and peace of mind you deserve.

This is a brief description of ESC. It is subject to change without notice. In case of conflict, the ESC contract will govern.

PEHJ0380 ©2014 Caterpillar | All Rights Reserved

CAT, CATERPILLAR, BUILT FOR IT, their respective logos, "Caterpillar Yellow," and the "Power Edge" trade dress, as well as corporate and product identity used herein, are trademarks of Caterpillar and may not be used without permission.

CAT Financial

CAT® EXTENDED SERVICE COVERAGE (ESC)
2013 Cat Electric Power Standby
Quick Reference Guide

Hour Limitations

Standby generator sets can not exceed 500 hours per year, no other hours options are permissible.

Advantage ESC Eligibility Requirements

Standby generator sets must:
A) Be less than four years from Delivery Date and accumulated less than 3,000 hours total use, or
B) Be currently enrolled in a New ESC or Advantage ESC and be less than ten years since delivery date, or
C) Be currently covered by a Cat dealer Customer Support Agreement (CSA) prior to registration and be less than ten years since the Delivery Date, or
D) Successfully complete an Advantage inspection by a Cat dealer - reference form LEEE3239.

Overhaul Protection Coverage (OPC) Eligibility Requirements

OPC Checklist is always required to enroll OPC - reference form LEEQ0013.

Additional ESC Allowances

Engine* Displacement	Travel/Mileage		Emergency Freight	Rental**		Crane & Rigging***	Overtime
	Silver, Gold, Platinum	Platinum Plus Only	All Coverage Levels	Platinum Only	Platinum Plus Only	Platinum Plus Only	Platinum Plus Only
Up to 4 liters	2hr/100mi	10hr/500mi	$500	$2,500	$5,000	$1,000	$1,500
Over 4 liters up to 7.5 liters	4hr/200mi	10hr/500mi	$500	$5,000	$10,000	$1,000	$1,500
Over 7.5 liters up to 34 liters	8hr/320mi	10hr/500mi	$500	$10,000	$20,000	$5,000	$1,500
Over 34 liters	8hr/320mi	10hr/500mi	$500	$15,000	$40,000	$12,500	$1,500

*Please refer to the generator set's Spec Sheet for its particular engine displacement.
**Not applicable with OPC. Allowance is granted if repairs cannot be completed within 96 hours (for Platinum) or 48 hours (for Platinum Plus) of the dealer's visit for the covered failure.
***Not applicable with OPC. Allowance is granted if repairs cannot be completed within 48 hours of the dealer's visit for the covered failure.

©2013 Caterpillar • All Rights Reserved • Printed in USA
This is a brief description of ESC, it is subject to change without notice. For use by Cat dealers in US and Canada only.
In case of conflicts the ESC contract will govern.
CAT, CATERPILLAR, their respective logos, "Caterpillar Yellow" and the "Power Edge" trade dress, as well as corporate and product identity used herein, are trademarks of Caterpillar and may not be used without permission.

Hour Limitations

Standby generator sets can not exceed 500 hours per year, no other hours options are permissible.

©2013 Caterpillar • All Rights Reserved • Printed in USA
This is a brief description of ESC, it is subject to change without notice. For use by Cat dealers in US and Canada only.
In case of conflicts the ESC contract will govern.
CAT, CATERPILLAR, their respective logos, "Caterpillar Yellow" and the "Power Edge" trade dress, as well as corporate and product identity used herein, are trademarks of Caterpillar and may not be used without permission.

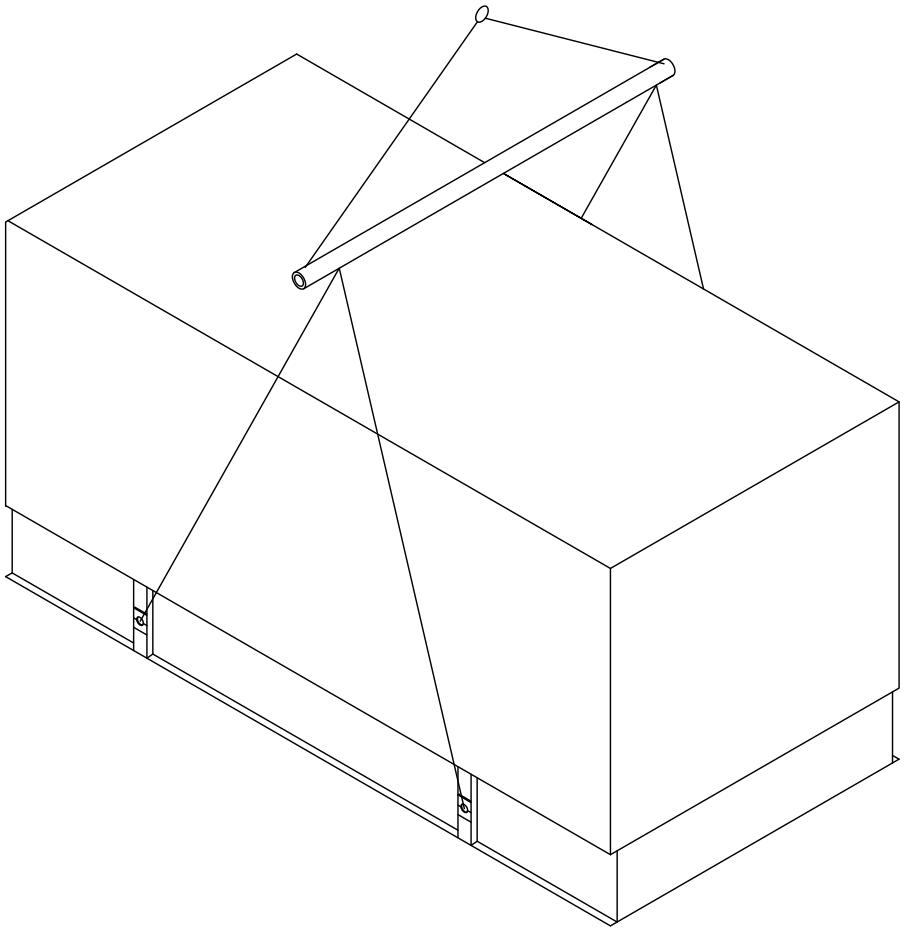

RECOMMENDED OFF-LOADING METHOD

- SPREADER BAR MUST BE WIDER THAN ENCLOSURE
- ALL LIFTING EYES MUST BE USED

Ring Power®			CAT®
EQUIPMENT LIFTING DIAGRAM			
DRAWN BY:	JW	REVISION	
DATE:	09/30/10	REVISION	
SCALE:	NONE	DRAWING NO.:	LIFT

Ring Power Site Safety Operating Plan (SSOP)

Document Version: 2.0 (Official Policy Statement) **Effective Date:** October 2025

This Site Safety Operating Plan (SSOP) outlines the mandatory safety and health requirements for all **Ring Power Personnel** (Field Service Technicians, Project Managers, Supervisors, etc.) performing work on behalf of Ring Power.

This document serves as the foundation for safe work practices and **must be reviewed as part of all job startup and field documentation. This SSOP will be formally included in all Ring Power project submittals to the General Contractor (GC) or Electrical Contractor (EC)**. While Ring Power personnel must comply with the GC's/EC's site rules, this plan establishes the mandatory minimum safety standards Ring Power personnel must follow. **In all instances, the most stringent applicable safety standard shall apply.**

1. Safety Policy & Stop Work Authority

1.1 Authority and Jurisdiction

All Ring Power Personnel shall strictly comply with all applicable Federal, State, and Local safety and health regulations, including, but not limited to:

- **OSHA:** 29 CFR Part 1926 (Safety and Health Regulations for Construction) and 29 CFR Part 1910 (Occupational Safety and Health Standards).
- **NFPA:** NFPA 70E (Standard for Electrical Safety in the Workplace) for all electrical work, including energized work practices, lockout/tagout (LOTO), and required Arc-Flash Personal Protective Equipment (PPE).
- **NFPA:** NFPA 101 (Life Safety Code) and NFPA 241 (Standard for Safeguarding Construction, Alteration, and Demolition Operations).

1.2 Stop Work Authority (SWA) - The Core Mandate

Safety is a condition of employment. Every Ring Power employee on a worksite—regardless of position or tenure—has the **AUTHORITY** and the **OBLIGATION** to stop any work activity believed to be immediately dangerous to life, health, property, or the environment.

The SWA procedure is non-punitive. No Ring Power employee shall face retribution for exercising SWA in good faith.

SWA Implementation Steps:

Step	Action	Responsibility
1. Stop	Immediately and calmly initiate a stop-work intervention. Stabilize the situation (e.g., turn off equipment, remove personnel from the hazard zone).	Any Ring Power Personnel
2. Notify	Immediately inform the **Ring Power Project Manager** and/or the designated Site Safety Officer/Supervisor.	Initiator / Immediate Supervisor
3. Investigate	The Project Manager/Supervisor must immediately assess the hazard, verify the SWA, and determine the root cause of the unsafe condition or behavior.	Ring Power Project Manager / Supervisor
4. Correct	Implement required corrective actions (e.g., equipment repair, re-training, new LOTO procedure, securing the area). The area must be proven safe before restart.	Ring Power Management
5. Resume	Work shall only resume after all corrective actions are complete, verified by the Ring Power Project Manager, and all affected personnel have been briefed.	Ring Power Project Manager
6. Follow-Up	The incident and resolution must be documented in the Weekly Safety Meeting minutes and used as a Lesson Learned.	Project Manager / Supervisor

1.3 Definitions

For this document, the following terms apply:

- **Qualified Person (NFPA 70E):** An individual who has demonstrated skills and knowledge related to the construction and operation of electrical equipment and installations and has received safety training to recognize and avoid the hazards involved (e.g., arc flash, shock).
- **Competent Person (OSHA):** An individual who can identify existing and predictable hazards in the surroundings or working conditions that are unsanitary, hazardous, or dangerous to employees, and who has authorization to take prompt corrective measures to eliminate them.
- **SWA (Stop Work Authority):** The non-negotiable right and obligation of every Ring Power employee to halt any job when an unsafe condition or practice is observed.

- **LOTO (Lockout/Tagout):** A procedure used to ensure that equipment is shut down, de-energized, and inoperable before maintenance or work can begin, preventing the unexpected release of hazardous energy.
- **CWZ (Controlled Work Zone):** An area delineated by Ring Power (using tape, cones, or barriers) to prevent unauthorized entry into a space where specialized, high-hazard work (e.g., energized electrical work) is actively taking place.
- **Host Contractor (GC/EC):** The General Contractor (GC) or Electrical Contractor (EC) who retains overall responsibility for site-wide safety and control on the project where Ring Power personnel are performing work.

2. Mandatory Administrative & Training Controls

2.1 Weekly Safety Meetings (Toolbox Talks) - Turnkey Projects

For all turnkey projects (Ring Power installation, startup, or continuous supervision), the **Ring Power Project Manager, Supervisor, or designated Lead Technician** (in the absence of a PM/Supervisor) is responsible for conducting and documenting a formal **Weekly Safety Meeting (Toolbox Talk)**.

- **Frequency:** At least once per week.
- **Attendance:** Attendance is mandatory for all Ring Power personnel and any subcontractors directly managed by Ring Power on the project.
- **Documentation:** Sign-in sheets and meeting topics must be maintained on file.
- **Content:** Topics must be relevant to the week's planned activities and identify high-hazard tasks (e.g., lifting, excavation, energized electrical work, confined space entry).

2.2 Accident & Incident Reporting and Record Keeping

- All incidents, including injuries, property damage, and near-misses, must be reported to the immediate **Ring Power Supervisor/Project Manager** immediately (within one hour). Serious injuries (in-patient hospitalization, amputation, loss of an eye) or fatalities must be reported immediately and verbally to the Ring Power Project Manager for required OSHA reporting.
- **Record Keeping:** All accident/incident reports, near-miss documentation, investigation findings, and corrective actions taken must be promptly forwarded to the Ring Power corporate Safety Department. Records must be maintained for a minimum of five (5) years in compliance with OSHA 29 CFR 1904.

2.3 Job Hazard Analysis (JHA)

For high-hazard or non-routine work (e.g., crane lifts, work in high-voltage areas, trenching, hot work), a JHA must be completed, reviewed, and signed by all participating Ring Power crew members before commencing work.

3. Mandatory Personal Protective Equipment (PPE)

Ring Power personnel are responsible for wearing, enforcing the use of, and ensuring proper fit/maintenance of all required PPE.

3.1 General Construction PPE (Minimum Requirements)

The following PPE is mandatory for all Ring Power personnel entering the defined work zone:

Item	Standard/Requirement	Notes
Head Protection	ANSI Z89.1 (Hard Hat)	Class E (Electrical) recommended for personnel working with power generation or distribution equipment. **IF REQUIRED.**
Foot Protection	ANSI Z41 or ASTM F2413 (Safety Boots)	It must be leather, steel-toed, or composite-toed.
Eye Protection	ANSI Z87.1 (Safety Glasses)	Side shields are mandatory. Face shields are required for grinding/chipping/hot work.
Hand Protection	Appropriate for the task	General work gloves (cut-resistant), chemical-resistant gloves, or voltage-rated gloves (NFPA 70E) as required.
High-Visibility	ANSI/ISEA 107 (Safety Vest)	Class 2 or 3 reflective vests will be worn **IF REQUIRED.**

3.2 Electrical Safety PPE (NFPA 70E Compliance)

All Ring Power personnel performing electrical work must be "Qualified Persons" trained in NFPA 70E, LOTO procedures, and Hazard/Risk Assessment.

- **Arc-Flash PPE:** Before any work on energized equipment (or work that could potentially contact energized parts), a site-specific Arc-Flash Hazard Analysis must be performed per NFPA 70E. Required Arc-Rated (AR) clothing and PPE must meet the calculated incident energy requirements (Cal/cm^2) or the assigned PPE Category (CAT).
- **LOTO:** Strict adherence to OSHA 29 CFR 1910.147 and 1926 Subpart K (Electrical) is mandatory. All energy sources must be de-energized, locked, and tagged out before commencing work. **Zero energy tolerance is the default safety position.**

4. Required Site Signage & Communication

All signage placed by Ring Power personnel must comply with OSHA 29 CFR 1910.145 and ANSI Z535 standards for color, formatting, and visibility.

Sign Type	OSHA/ANSI Color Code	Purpose & Examples
Danger	White letters on a **red** oval/Black background	Indicates an immediate hazard which, if not avoided, **will result in death or serious injury.** *Example: DANGER - HIGH VOLTAGE*
Warning	Black letters on an **orange** background	Indicates a hazard which, if not avoided, **could result in death or serious injury.** *Example: WARNING - CRANE OVERHEAD LIFTING*
Caution	Black letters on a **yellow** background	Indicates a hazard which, if not avoided, **could result in minor or moderate injury.** *Example: CAUTION - HOT SURFACE*
Notice	White letters on a **blue** background	Provides general information, rules, or policies. *Example: NOTICE - RING POWER PERSONNEL ONLY*
Safety Instruction	White letters on a **green** background	Provides general instructions for safe practices. *Example: FIRST AID STATION*

Mandatory Signage Requirements:

1. **Work Area Definition:** Use Caution/Danger tape, cones, or barricades to define the immediate Ring Power work area.
2. **Electrical Areas: DANGER - HIGH VOLTAGE** signs must be placed on equipment panels or boundaries where electrical hazards exist, especially during testing or operation.
3. **Egress/Emergency:** Ring Power personnel must be aware of and respect all general site emergency signage (exits, muster points, fire extinguishers).

5. Emergency Response

The **Ring Power Project Manager/Supervisor** must ensure the team is aware of the site's Emergency Action Plan (EAP). This includes:

1. Identifying the site's **Muster/Assembly Point** location.
2. Reviewing the procedure for reporting fires, medical emergencies, and other critical incidents.
3. Ensuring all personnel know the address of the worksite and the nearest hospital.
4. Ensuring adequate **First Aid** supplies are available in the work truck/staging area.
5. Verifying that **appropriate fire extinguishers** for the expected fire classes (e.g., Class ABC for electrical) are on-site as per NFPA 10 requirements and accessible.

5.1 Emergency Contact and Location Information

Prior to commencing work, the Ring Power Project Manager must complete and post the following information clearly at the Ring Power staging area and in all service vehicles:

Contact Type	Role/Location	Name/Address	Phone Number
On-Site	GC Site Safety Officer		
On-Site	GC Project Manager		
Off-Site	Local Fire/EMS/Police	911 or	911 or
Off-Site	Closest Medical Facility		
Internal	Ring Power Safety Manager		

6. Additional Protective Measures and Specialized Hazards

This section outlines specific protective practices and procedures for high-risk activities to further protect Ring Power personnel and limit liability exposure related to third-party hazards.

6.1 Host Contractor (GC/EC) Responsibilities

Ring Power personnel shall not proceed with work if the Host Contractor (GC/EC) does not meet basic safety requirements.

- **Site Control:** The GC/EC is ultimately responsible for maintaining safe access, general housekeeping, proper barricading, and overall site integrity (excavations, fall protection systems). Ring Power personnel must immediately notify the GC/EC if an issue is observed.
- **Documentation Access:** Ring Power Project Managers shall request copies of the GC/EC's site-specific plans for Confined Space, Fire Prevention, and Emergency Response as applicable.

6.1.1 Boundary Control and SWA Escalation

Ring Power utilizes caution tape, cones, and hard barriers to establish **Controlled Work Zones (CWZs)** to protect personnel from specialized hazards (e.g., energized equipment, high-pressure testing, crane rigging). The unauthorized crossing or penetration of a Ring Power CWZ by non-Ring Power personnel is considered a **critical safety violation** and will result in immediate escalation:

1. **First Breach:** The Ring Power employee initiating the **SWA** must immediately halt the related task and notify the GC/EC Site Supervisor and the Ring Power Project Manager. A mandatory meeting with the GC/EC Site Supervisor must take place to review the breach and re-establish boundary integrity.
2. **Second/Recurring Breach:** If unauthorized personnel cross the boundary a second time (or the first breach poses an imminent, severe hazard), the Ring Power Project Manager shall issue a formal warning to the GC/EC. Work will remain suspended until the GC/EC commits to providing a **dedicated, trained attendant (fire-watch/personnel stand-by)** whose sole responsibility is to patrol and enforce the Ring Power CWZ boundaries.
3. **Failure to Provide Attendant:** If the GC/EC fails to provide the dedicated attendant, Ring Power reserves the right to suspend work until the site environment meets the necessary safety standards, and all costs associated with the resulting delay may be billed back to the Host Contractor.

6.2 Working at Heights and Fall Protection

Ring Power personnel involved in activities at heights of **6 feet or greater** must comply with OSHA 1926 Subpart M (Fall Protection).

- **100% Tie-Off:** Full body harness and lanyard/SRL usage is mandatory when working from aerial lifts or when exposed to unprotected edges 6 feet or greater above a lower level, unless guarded by compliant guardrails or netting.
- **Harness Inspection:** Harnesses and lanyards must be inspected before each use. Defective equipment must be tagged "DO NOT USE" and immediately removed from service.

6.3 Excavation and Trenching Safety

Ring Power personnel shall **never** enter an unprotected excavation greater than 5 feet in depth.

- **Utility Clearance:** Before any dig, all utilities must be marked (e.g., call 811) and verification obtained.
- **Protection Systems:** If entry into a trench is required, the trench must be protected by shoring, shielding, or sloping, as designed by a **Competent Person** (OSHA 1926 Subpart P).

6.4 Housekeeping and Fluid Management

This is critical for electrical and generator work environments.

- **Hazard Prevention:** All work areas must be kept clean, orderly, and free of unnecessary debris, tools, or waste that could create trip or fire hazards (OSHA 1926.25).
- **Spill Kits:** Adequate spill prevention and control measures (absorbents, secondary containment) must be on hand when handling fuels, lubricants, coolants, or hazardous materials. All spills must be immediately contained and reported to the Ring Power Project Manager and the GC/EC.

6.4.1 Hazardous Waste Disposal

Ring Power personnel must ensure the proper segregation, labeling, and disposal of all project-generated hazardous waste (e.g., spent oils, contaminated rags, battery acid, electrical components).

- **Containment:** All hazardous waste must be placed in appropriately labeled, sealed containers (OSHA/DOT compliance) and stored securely in the designated GC/EC hazardous material staging area.
- **Manifests:** The Ring Power Project Manager must coordinate with the Host Contractor to ensure proper transfer and manifest documentation are completed for off-site disposal, in accordance with EPA and local regulations. **No hazardous waste shall be left unmanifested on site.**

6.5 Health, Fatigue, and Impairment

- **Heat Stress:** Personnel must be trained in recognizing and preventing heat-related illnesses (heat stroke, heat exhaustion). Scheduled rest breaks and access to shade and potable water are mandatory during high-temperature conditions.
- **Impairment:** Working under the influence of drugs, alcohol, or any substance that impairs judgment or motor function is strictly prohibited. Ring Power personnel who feel fatigued or impaired must notify their supervisor immediately.

7. Technician Field Work Protocols (Specific Policies)

This section details the mandatory safety protocols for routine field activities performed by Ring Power service technicians.

7.1 Portable Tool and Cord Safety (OSHA 1926 Subpart I)

- **Pre-Use Inspection:** All portable electric, pneumatic, and hydraulic tools must be inspected before each use for damaged cords, worn insulation, missing guards, and functional safety switches. Defective tools shall be tagged and removed from service.
- **Guarding:** Safety guards (e.g., on grinders, saws) must never be tied back, modified, or removed.
- **Electrical Cords:** Only use **Ground Fault Circuit Interrupter (GFCI)** protected circuits, receptacles, or extension cords. Extension cords must be heavy-duty (three-wire type) and rated for the

intended use. Cords must never be run through water, doorways, or areas where they can be damaged or create trip hazards.

- **Abrasive Wheels:** Ensure grinding wheels are visually inspected for cracks and tested (ring test) prior to mounting. The arbor spindle speed must never surpass the maximum speed rating of the wheel.

7.2 Vehicle and Mobile Equipment Safety

- **Pre-Use Check:** All service vehicles, forklifts, aerial lifts, and associated mobile equipment must undergo a documented **pre-use inspection** (daily/shift check) before operation.
- **Load Securement:** All tools, equipment, and parts in service vehicles must be properly secured using tie-downs or restraints to prevent shifting during transit (OSHA 1926.250).
- **Spotters/Backing:** A designated **spotter** is required when backing large service vehicles or operating mobile equipment (forklifts, boom lifts) with limited rear visibility, especially in busy work environments.
- **Aerial Lifts:** Only qualified and authorized personnel shall operate aerial lifts. Fall protection (harness and lanyard) must be worn and attached to the designated anchor point at all times while in the basket.

7.3 Rigging, Lifting, and Material Handling

- **Certified Rigging:** Only slings, shackles, and rigging hardware that are certified and inspected shall be used. Defective rigging gear must be immediately removed from service.
- **Rated Capacity:** Lifting devices and rigging must never be loaded beyond their rated capacity. Technicians must verify the weight of the load before lifting.
- **Cranes/Hoists:** Ring Power personnel shall only work near or under suspended loads when necessary for the task, and only when the lift is managed by a qualified operator following a documented lift plan.

7.4 Fire Watch and Hot Work

- **Permit Required:** Hot work (welding, torch cutting, or grinding that produces significant sparks) must follow the Host Contractor's permitting process.
- **Fire Watch Protocol:** A trained **Fire Watch** must be stationed during and for a minimum of **30 minutes after** any hot work is completed to monitor for latent fires (NFPA 51B).

7.5 Two-Person Work Requirements (NFPA 70E / High Hazard)

The following activities require a minimum of **two (2) Qualified Ring Power Personnel** to be present. One person shall be the **Authorized Worker** performing the task, and the second person shall act as the

Safety Observer/Attendant. The Safety Observer's sole function is to monitor the Authorized Worker and intervene in case of emergency.

A two-person team is mandatory for, but not limited to, the following high-hazard activities:

- **Electrical Work:** Any task requiring entry into the Restricted Approach Boundary (RAB) of energized electrical equipment, per NFPA 70E standards.
- **Switchgear & ATS:** All work (testing, maintenance, or connection) on or near energized Automatic Transfer Switches (ATS), parallel switchgear, or main distribution switchboards.
- **High-Power Testing:** Load bank testing or commissioning of generator sets at or above **1 Megawatt (1 MW)**, or any test involving synchronization to an energized bus.
- **Medium Voltage (MV) Applications:** All work and testing conducted on equipment rated 600V or higher, including but not limited to, MV switchgear, cables, terminations, and breakers.
- **Non-Entry Rescue:** Work in confined spaces (if authorized by permit) where a non-entry attendant is required.

Safety Observer/Attendant Requirements:

1. Must be a Ring Power Qualified Person, trained in the hazards and the necessary emergency response procedures.
2. Must be stationed within audible and visual contact of the Authorized Worker and remain clear of the immediate hazard area.
3. Must be capable of rendering aid, initiating emergency response (911/site emergency contacts), and administering CPR/AED if necessary.

7.6 Traffic Management and Control

When Ring Power work activities impact pedestrian or vehicular traffic (e.g., loading/unloading, crane setup, work adjacent to roadways):

- **Planning:** Traffic flow, including material movement, must be addressed in the daily PTP/JHA.
- **Barricades and Signage:** Appropriate high-visibility cones, barricades, and signage (per Manual on Uniform Traffic Control Devices - MUTCD) must be utilized to define and protect the work zone.
- **Flagging:** If required by the Host Contractor or site plan, only trained and authorized flaggers shall be utilized. Ring Power personnel working near moving traffic must maintain a visual barrier or safe offset distance**.**

8. Conclusion and Accountability

This Site Safety Operating Plan (SSOP) represents Ring Power's unwavering commitment to cultivating and maintaining a **Strong Safety Culture**. These non-negotiable standards ensure the safety of our personnel and compliance with all relevant OSHA and NFPA requirements.

Ring Power personnel are held accountable for adherence to every policy and protocol outlined herein. We rely on the Host Contractor (GC/EC) to manage and maintain the general site safety conditions, while our teams will operate by these stringent Ring Power rules to protect against specialized electrical and high-hazard risks.

This plan confirms that Ring Power will actively enforce the **Stop Work Authority (SWA)** principle, removing any personnel or discontinuing any work found to be unsafe until the hazard is fully resolved.

OFFICIAL APPROVAL AND AUTHORIZATION

Author: Daniel Clifton, Ring Power Electrical Safety Program Manager

Approval: This Site Safety Operating Plan (SSOP) has been reviewed and approved by:

Brian Cholmondeley 10/22/25

Name: Brian Cholmondeley

Position: SR VP / DIRECTOR OF PSD, PSD EPG

Date: 10/20/2025

Distribution: This SSOP shall be distributed to all General Contractors/Electrical contractors before Ring Power's arrival on site.

Department of Environmental Protection

2600 Blair Stone Road ♦ Tallahassee, Florida 32399-2400

DEP Form: 62-761.900(2)
Form Title: Storage Tank Facility Registration Form
Effective Date: January 2017
Incorporated in Rule 62-761.400, F.A.C.

Storage Tank Facility Registration Form

Review Registration Instructions Before Completing this Form

Submit this completed form for the facility when registration of storage tanks or compression vessels is required by Chapter 376.303, Florida Statutes

Please check all that apply: ☐ New Registration ☐ New Owner ☐ New Tanks
☐ Existing Facility Info Update/Correction ☐ Existing Owner Info Update/Correction ☐ Existing Tank Info Update/Correction

A. FACILITY INFORMATION **County:** _____ **DEP Facility ID:** _____

Facility Name: _____

Facility Address: _____ City: _____ Zip: _____

Facility Contact: _____ Business Phone: _____

Facility Type(s): _____ Financial Responsibility Mechanism (choose): ☐ Insurance ☐ Other

24 Hour Emergency Contact: _____ **Emergency Phone:** _____

B. TANK OWNER INFORMATION: Identify individual(s) or Business(es) responsible for payment of Registration Fees at the facility location named above

Company/Individual Name: _____ Ownership Effective Date: _____

Mail Address: _____ STCM Account Number (if known): _____

City, State, Zip: _____

Contact Person: _____

Telephone: _____ Email Address: _____

C. PROPERTY OWNER INFORMATION: Identify individual(s) or entity that if vested with ownership, dominion or legal or rightful title to the real property

Company/Individual Name: _____ Ownership Effective Date: _____

Mail Address: _____

City, State, Zip: _____

Contact Person: _____

Telephone: _____ Email Address: _____

D. TANK/VESSEL INFORMATION: Complete one row for each storage tank or compression vessel system located at this facility (see Registration Instructions for **codes**)

	Tank ID	T or V	A or U	Capacity	Installation Date	Content Code	Status	Effective Date	Construction	Piping	Monitoring
1											
2											
3											
4											
5											
6											
7											
8											

Certified Contractor (performing UST installation or removal): _____ DBPR License No.: _____

Facility Registration Certification: To the best of my knowledge and belief, all information submitted on this form is true, accurate and complete.

_____ Signature

_____ Date

_____ Printed Name

_____ Title

Submit this form to tankregistration@dep.state.fl.us

Florida Department of Environmental Protection

Bob Martinez Center • 2600 Blair Stone Road • Tallahassee, Florida 32399-2400

Division of Waste Management - Storage Tank Facility Registration Form
Registration Instructions and Codes List

Storage tank registration is available online through the DEP Business Portal in lieu of the paper form:

- *DEP Business Portal can be found:* http://www.fldepportal.com/go/submit-registration
- *Instructions on how to navigate the DEP Business Portal can be found on the DEP Registration web page:* http://www.dep.state.fl.us/waste/categories/tanks/pages/registration.htm

Storage Tank Facility Registration Form

In the first outlined section block, identify the types of information being submitted on the registration form.
[Forms 62-761.900(2) for USTs and 62-762.901(2) for ASTs. For facilities with both types of tanks, one form may be used].
Check ***New Registration*** when the **location** is being registered for the first time and no Facility Identification number exists. If submitting a revised Registration form, check all other boxes that apply to designate the type(s) of revisions being submitted.

A. Facility Information

County List the county where the storage tank facility is located.

Facility ID Include the DEP Facility Identification number whenever possible. Write in "Pending" when submitting a new registration for the first time. Remember: the facility ID number identifies the location, and it does not change even when a facility is transferred to a new owner upon sale of the facility.

Facility Name Provide the current name of the business establishment operating at the facility location. When registering an abandoned facility, where tanks exist but there is no operational business, identify the location with the property owner's name, as in "Smith Property", if no other facility name is being used.

Facility Address Include the street number and name. In a rural area with no street number associated with it, provide the parcel ID number along with directions (e.g., 'x' miles N of intersection...). Provide the name and telephone number of a contact person or manager *on location,* where possible.

Facility Type This information is an explanation or term that most closely describes the operational use of the facility. Select the code(s) that provides the best or most appropriate description of the facility.

1. If the facility is owned by a government entity, select the appropriate type from the following:
   - **F.** Federal Government
   - **G.** State Government
   - **H.** Local or City Government
   - **I.** County Government
   - **N.** Native Tribal Lands

2. If the facility meets the definition of "bulk product facility" - a waterfront location with at least one aboveground tank with a capacity greater than 30,000 gallons which is used for the storage of pollutants ("Pollutants" includes oil of any kind and in any form, gasoline, pesticides, ammonia, chlorine, and derivatives thereof, excluding liquefied petroleum gas"); select the type from:
   - **T.** Coastal bulk product facility - facility, as defined above and located on the Florida coast, may have storage tank systems that store hazardous substances in addition to pollutants. ("Coastline means the line of mean low water along the portion of the coast that is in direct contact with the open sea and the line marking the seaward limit of inland waters, as determined under the Convention on Territorial Seas and the Contiguous Zone, 15 U.S.T. (Pt. 2) 1606.").
   - **S.** Inland waterfront bulk product facility – a facility, as defined above and located on "inland waterways" (lakes, rivers), may have storage tank systems that store hazardous substances in addition to pollutants.

3. When the facility is a "waterfront location", but not a *bulk product facility* as defined above, select the most appropriate type from:
   - **V.** Marine fueling facility - a commercial, recreational, or retail coastal facility that provides fuel to vessels and may store other pollutants and/or hazardous substances on site.

Facility Type continued

W. Waterfront fueling facility - a commercial, recreational, or retail facility located on a non-coastal waterway that provides fuel to vessels and may store other pollutants and/or hazardous substances on site.

4. When the facility is not described as previously stated, select the most appropriate type from:

A. Retail Station - primarily supplies vehicular fuel to automotive customers; may store other regulated substances.

C. Fuel User, Non-retail - primarily stores motor fuel and/or other pollutants or hazardous substances for consumption by facility/owner/operator.

D. Inland Bulk Petroleum Storage - inland facility with no waterfront access, that has multiple active UST and/or AST storage systems used primarily for storage of pollutants intended for distribution. May also store hazardous substances on-site for facility consumption and/or distribution purposes.

E. Industrial Plant - inland facility with no waterfront access; may include power plants and facilities designed for manufacturing and/or chemical processing; may have multiple active UST and/or AST storage systems used for storage of pollutants and/or hazardous substances intended for facility consumption.

J. Collection Station - maintenance or other related facility that acquires and temporarily stores used and/or waste oil prior to recycling and/or disposal.

K. Inland Bulk Chemical Storage - inland facility with no waterfront access, that has multiple active UST and/or AST storage systems and/or compression vessels used for storage of hazardous substances intended for distribution. May also store pollutants on site for facility consumption and/or distribution purposes.

L. Chemical User - facility primarily uses regulated hazardous substance tanks on site; may also store pollutants.

M. Agricultural - facility actively used in production of crops, plants, or livestock.

P. UST Residential (>1100 gallons) - residence with USTs regulated by Federal Environmental Protection Agency.

Z. Other - Identify the type of establishment that you are registering.

Financial Responsibility – The demonstration of financial responsibility shall be made by the owner or operator in accordance with 40 CFR 280, Subpart H. Check box for Insurance or Other (includes all other financial responsibility methods).

24 Hour Emergency Contact - Provide the name and telephone number of the Emergency Contact for this facility.

B. Tank Owner Information

1. Provide the name, address, contact name, telephone number, and email address of the individual(s) and/or business(es) that are responsible for the operation of the storage tanks and for the payment of DEP annual Storage Tank Registration fees. The tank owner will also be associated with the role of Account Owner and will be given a STCM Account Number. The Account Owner is responsible for payment of the annual storage tank registration fees, and will receive the annual storage tank registration placard(s) upon payment.

2. When submitting revisions to owner name or address information, please include their STCM Account Number, when available.

3. Submit a registration form when the tank ownership changes, complete with the date and new account owner's signature.

C. Property Owner Information

1. Provide the name, address, contact name, telephone number, and email address of the individual(s) and/or business(es) that are vested with ownership, dominion or legal or rightful title to the real property.

2. Submit a registration form when the property ownership changes, complete with the date.

D. Tank/Compression Vessel Information - Complete one row in Section D for each storage tank and/or compression vessel system located at the facility. Use the following system description codes where appropriate.

1. **Tank ID** – number the systems sequentially, or provide a unique ID number; do not use symbols (#, %, -, etc.).
2. **Tank or Vessel Indicator** – choose T or V to describe the system type.
3. **Tank Placement** – choose A or U to designate aboveground or underground placement of the system.
4. **Tank Capacity** – enter the storage tank capacity in gallons.
5. **Installation Date** – record the date of installation in 'MM/YY' format; provide a best estimate if unknown.
6. **Tank Content** – record the current content (or last content, if system is closed or out-of-service) from the list below:

A	**Leaded Gasoline**	**K**	**Kerosene**	**U**	**Mineral Acid***
B	**Unleaded Gasoline (No Ethanol)**	**L**	**Waste Oil**	**V**	**Grades 5 & 6 bunker "C" residual oils**
D	**Vehicular Diesel**	**M**	**Fuel Oil: on-site heating only; USTs or ASTs < 30K gals^**	**W**	**Petroleum-based additive product**
E	**Aviation Gasoline**	**N**	**Fuel Oil: distribution; or on-site heating - ASTs > 30K gals¥**	**X**	**Miscellaneous petroleum-based product**
F	**Jet Fuel**	**O**	**New and Lube Oil**	**Y**	**Unknown Substance**
G	**Diesel Fuel-Emergency Generator**	**Q**	**Pesticide**	**Z**	**Other Substance (please identify)**
H	**Diesel Fuel-Generator or Pump**	**R**	**Ammonia Compound**	**7**	**Biodiesel (B20)**
I	**Diesel Fuel-Ultra Low Sulfur**	**S**	**Chlorine Compound**	**8**	**E10 – blend of 10% ethanol/90% gasoline**
J	**Used Oil**	**T**	**Hazardous Substance (CERCLA)**	**9**	**E85 – blend of 85% ethanol/15% gasoline**

* Mineral Acid = Hydrobromic acid, Hydrochloric acid, Hydrofluoric acid, Phosphoric acid and Sulfuric acid.
^ M = fuel is used solely to heat the facility premises and must be stored in a tank with capacity < 30,000 gallons; exempt from regulation.
¥ N = fuel is distributed as heating fuel, or fuel is used solely to heat the facility premises, but the storage tank capacity exceeds 30,000 gallons.

** Compartmented tanks – register as a single tank; itemize the size and contents of each compartment. See construction miscellaneous attributes.
** Manifold tanks – register as individual storage tanks; with individual size and content – even though they are "connected".

7. **Status** – record the current status of the system, and the status effective date (or best estimate) in 'MM/YY' format. Update the tank status timely, as necessary for tanks moving between "in service" and "out of service" status.

   A. Properly closed in-place UST filled with sand, concrete or other inert material; AST rendered unusable.

   B. Removed from the site.

   D. Deleted – Data Error – Added to STCM in error; may be a duplicate tank (and/or facility), or tank was registered prior to installation and decided not to have tank installed.

   E. Construction modified – AST constructed as a "mobile tank" or enclosed in a building; no longer retains a "regulated" status.

   M. Moved to New Site – Designation that identifies a tank as removed from a particular facility and reinstalled at a second facility.

   T. Out-of-service tank – Tank system that is designated as out-of-service by the owner or operator.

   U. In-service – Tank system that is NOT designated as out-of-service by the owner or operator.

   V. Temporary out-of-service – Field erected storage tank system that is designated as temporary out-of-service by the owner or operator.

   W. Non-regulated use/process – Exempt from regulation due to how the tank or substance is used; i.e. tank stores diesel used in FLOWTHROUGH process.

   Z. Non-regulated product – Stored in tank; provide status effective date when status relates to a 'change in product' from a regulated substance to a non-regulated substance for a particular storage tank.

   8. Construction, Piping, and Monitoring Attributes – Select from the lists below, the codes that best describe the attributes of each storage tank system.

CONSTRUCTION

Primary Construction:	**C** Steel **D** Unknown **E** Fiberglass **F** Fiberglass-clad steel	**X** Concrete **Y** Polyethylene **Z** Other DEP approved protection method
Overfill/Spill:	**A** Ball check valve **M** Spill containment bucket **N** Flow shut-off	**O** Tight fill **P** Level gauges, high-level alarms **Q** Other DEP approved protection method
Corrosion Protection	**G** Cathodic protection – sacrificial anode	**H** Cathodic protection – impressed current
Secondary Containment	**I** Double-walled construction: single material (outer tank material same as inner tank material) **R** Double-walled construction: dual material (outer tank – concrete, approved synthetic material, or tank "jacket") **J** Synthetic liner in tank excavation **K** Concrete, synthetic material, and/or off-site clays beneath AST and in containment area **S** Other DEP approved/registered containment system	
Construction: **Miscellaneous Attributes**	**B** Internal Lining **L** Compartmented	**U** Field Erected **W** Built on supports

PIPING

Primary Construction	**B** Steel or Galvanized Metal **C** Fiberglass **N** Approved Synthetic Material	**X** No piping associated with tank **Y** Unknown **Z** Other DEP approved piping material
Corrosion Protection	**D** External Protective Coating **E** Cathodically Protected with Sacrificial Anode or Impressed Current	
Secondary Containment	**F** Double-walled construction: single material (outer pipe material same as inner pipe material) **M** Double-walled construction: dual material (outer pipe approved synthetic material or pipe "jacket") **G** Synthetic liner or box/trench liner in piping excavation or pipe containment area **P** Internal Piping: contained within an internal sump riser directly connected to tank and located beneath dispenser	
Piping: **Miscellaneous Attributes**	**A** Aboveground – no contact with soil **I** Suction Piping System **J** Pressurized Piping System **W** Piping over water	**K** Dispenser Sumps **L** Bulk Product System **H** Airport/Seaport Hydrant System

MONITORING

External	**E** Monitoring of UST synthetic liner **Q** Visual Inspection of AST Systems **8** Manually Sampled Wells	**W** Fiber-optics Technologies **Z** Other DEP approved monitoring methods
Internal	**F** Interstitial Space – Double-walled Tank **R** Interstitial Monitoring of AST Tank Bottom	
Piping Monitoring	**G** Electronic Line Leak Detector with Flow Shutoff **H** Mechanical Line Leak Detector **J** Monitoring of Piping Liner	**K** Interstitial Monitoring – Double-walled Piping **U** Bulk Product Piping Pressure Test **6** External Monitoring
Miscellaneous	**I** Not Required – See Rule for Exemptions **Y** Unknown **1** Continuous Electronic Sensing Equipment **2** Visual Inspections of Piping Sumps	**3** Electronic Monitoring of Piping Sumps **4** Visual Inspections of Dispenser Sumps **5** Electronic Monitoring of Dispenser Sumps

E. Certified Contractor and Certification

Record the name and the ***Department of Business and Professional Regulation License Number*** for the ***Certified Contractor*** whenever an underground storage tank has been installed or removed. Do not rely on the contractor to file this form. Storage Tank Registration Forms are required to be submitted by the storage tank system owner.

Please Remember - The Registration Form cannot be processed without the name and signature of the storage tank system owner and the date of the form submittal. Please print the name legibly in case a representative of the storage tank program should need to contact you.

Submit form to tankregistration@dep.state.fl.us

If you have questions, please call a storage tank registration representative at (850) 245-8839 or email tankregistration@dep.state.fl.us for assistance. Thank you for your cooperation.

New Emergency Generator Storage Tank Owner Outreach

I am getting an emergency generator that will be powered by petroleum product that is stored in a storage tank (e.g., diesel fuel). What Florida Department of Environmental Protection (Department) rule do I need to follow?

- Rules for Aboveground Storage Tank Systems – Chapter 62-762, Florida Administrative Code (F.A.C.).
- Rules for Underground Storage Tank Systems see Chapter 62-761, F.A.C.

What size petroleum storage tanks are regulated by the Department?

- Stationary aboveground tanks with a capacity of greater than 550 gallons.
- Underground storage tanks with a capacity of greater than 110 gallons.

My tank will be regulated. In general, what do I need to know for installation and start-up purposes?

- Your storage tank system equipment will need to be listed on the Department's Equipment Approval/Registration List, see Rules 62-762.851(2) or 62-761.850(2), F.A.C.
- You will need to contact the inspector in the county where your storage tank will be located (Storage Tank District and County Contact List), and provide 30 to 45 day prior notice of the installation of the storage tank. In addition, you will need to provide 48- to 72-hour prior confirmation notification to the inspector, see Rules 62-762.411 or 62-761.405, F.A.C.
- Your storage tank will need to be registered with the Department per Rules 62-762.401 or 62-761.400, F.A.C.:
    - Storage tanks at new facilities (those without a current Facility #) must be registered through the Online Services Business Portal ESSA no later than 30 days prior to installation, or you can submit the Storage Tank Facility Registration Form in electronic or paper format to the Registration Section. To contact a Storage Tank Registration Representative call (850) 245-8839, or tankregistration@floridadep.gov; or
    - Storage tanks at facilities with existing registered storage tanks can register the new storage tank(s) seven days prior to placing fuel into the storage tank.
- If you are installing an underground storage tank then the storage tank must be installed by a Pollutant Storage System Contractor, licensed by the Department of Business and Professional Regulation per Rule 62-761.500(1)(h), F.A.C.
- You will need to provide Financial Responsibility for your storage tank system. See Rules 62-762.421 or 62-761.420, F.A.C., and the Financial Responsibility website.

What additional equipment and start-up requirements in general will apply to my generator storage tank?

- In accordance with Rules 62-762.501 or 62-761.500, F.A.C., your storage tank will need to have the following:
- Secondary containment, spill containment, and overfill protection, and go through start-up testing to ensure integrity/proper operation;
- Small diameter integral piping, if in contact with soil or over the waters of the state, shall have secondary containment and go through start-up testing to ensure integrity;
- Storage tank systems shall have a method or combination of methods of release detection that can detect a new release from any portion of the storage tank system, and release detection devices are required to have start-up operability testing.
- Remember other federal, state, or local requirements may apply.

Additional Links: Storage Tank Compliance main page; Storage Tank System Rules, Forms and Reference Guidelines; Storage Tank Equipment Registration website; Storage Tank Facility Registration website.

For questions or to request assistance from DEP in this matter, please contact:

DEP-Central District
3319 Maguire Blvd., Ste. 232
Orlando, FL 32803-3767
(407) 897-4132

DEP-Northeast District
8800 Baymeadows Way W. Ste 100
Jacksonville, FL 32256-7526
(904) 256-1681

DEP Northwest District
160 Governmental Center
Pensacola, FL 32502-5794
(850) 595-0586

DEP-South District
2295 Victoria Avenue, Ste. 364
Fort Myers, FL 33901-3875
(239) 344-5695

DEP-Southeast District
3301 Gun Club Rd, MSC7210-1
West Palm Beach, FL 33406-3007
(561) 681-6600

DEP-Southwest District
13051 N. Telecom Pkwy
Temple Terrace, FL 33637-0926
(813) 470-5874

Note: Nothing herein is intended to modify Florida Statutes, Department rules or guidance documents incorporated within those rules.

New Generators/Tanks

Storage Tank Inspection Checklist

Facility Name:

Contact Name:

Job #: Date:

Tank ID: AGST ☐ UGST ☐ Sub-base ☐ Tank Size:.

Breach of Integrity Test : Take a legible picture of the vacuum gauge at time of installation to indicate that the tank held pressure (performed by Ring Power Technician and provided to Ring Power Project Manager). Send with document. ☐

Rupture Basin Alarm: Confirm operation of rupture basin alarm, Inspect at the time of installation ☐

High / Low Fuel Alarms: Confirm operation of both high and low fuel level alarms ☐

Spill Bucket Test: Conduct spill bucket hydrostatic test at time of installation. ☐

Fuel Level Gauge:

Krueger Gauge ☐ **This gauge has been removed and manually tested. According to gauge tank appears to be full at 90% capacity.**

Greenleaf Solar Gauge ☐

Pneumercator ☐

Morrison Clock Gauge ☐

Other:_____ ☐

_____ _____

Technician Signature Date

500 World Commerce Parkway, St Augustine, FL 32092 • 904-494-1007

CALL PRIOR TO ARRIVAL/ GATE #4 ACCESS/ NEED ESCORT

STORAGE TANK COMPLIANCE CONTACT LIST

Compliance Assistance Program

Division of Waste Management

Florida Department of Environmental Protection

October 18, 2019

2600 Blair Stone Road, MS 4525
Tallahassee, Florida 32399-2400
Florida Department of Environmental Protection
Storage Tank Compliance

Storage Tank Compliance District Contacts

DEP - Central District - 3319 Maguire Blvd, Suite 232, Orlando, FL 32803-3767

Title	Name	Phone	E-mail
Environmental Manager	Jill Farris	(407) 897-4136	Jill.Farris@FloridaDEP.gov
Environmental Consultant	Charles D. Johnson	(407) 897-4329	Charles.D.Johnson@FloridaDEP.gov
Environmental Specialist	Allen Rainey	(407) 897-2929	Allen.Rainey@FloridaDEP.gov
Environmental Specialist	Sean Boyles	(407) 897-4164	Sean.Boyles@FloridaDEP.gov
Environmental Specialist	Casey Brock	(407) 897-2924	Casey.T.Brock@FloridaDEP.gov
Environmental Specialist	Rick Fritts	(407) 897-2913	Derrick.Fritts@dep.state.fl.us

DEP – Northeast District - 8800 Baymeadows Way West, Suite 100, Jacksonville, FL 32256-7526

Title	Name	Phone	E-mail
Environmental Consultant	Matt Harris	(904) 256-1527	Matthew.J.Harris@FloridaDEP.gov
Environmental Specialist	Shelby O'Brien	(904) 256-1610	Shelby.O'Brien@FloridaDEP.gov
Environmental Specialist	Linda Oliva	(904) 256-1552	Linda.Oliva@FloridaDEP.gov
Environmental Specialist	Bonnie Bradshaw	(904) 256-1638	Bonnie.Bradshaw@FloridaDEP.gov

DEP – Northwest District - 160 Governmental Center, Pensacola, FL 32502-5794

Title	Name	Phone	E-mail
Environmental Manager	Russell Sullivan	(850) 595-0575	Russell.Sullivan@FloridaDEP.gov
Environmental Consultant	Mark Gillman	(850) 595-0586	Mark.Gillman@FloridaDEP.gov
Environmental Specialist	Sue Bristol	(850) 595-0570	Susan.Bristol@FloridaDEP.gov
Environmental Specialist	Sara Merritt	(850) 595-0589	Sara.Merritt@FloridaDEP.gov

DEP – South District - 2295 Victoria Avenue, Suite 364, Fort Myers, FL 33901-3875

Title	Name	Phone	E-mail
Environmental Manager	Ryan Snyder	(239) 344-5695	Ryan.Snyder@FloridaDEP.gov
Environmental Specialist	Nereida Hernandez-Morales	(239) 344-5697	Nereida.Hernandez@FloridaDEP.gov
Environmental Specialist	Robert J. Butler	(239) 344-5619	Robert.J.Butler@FloridaDEP.gov

DEP – Southeast District - 3301 Gun Club Road, MSC 7210-1, West Palm Beach, FL 33406

Title	Name	Phone	E-mail
Environmental Manager	Greg Kennedy	(863) 462-5888	Greg.A.Kennedy@FloridaDEP.gov
Environmental Specialist/SME	Judy Dolan	(561) 681-6733	Judy.Dolan@FloridaDEP.gov
Environmental Specialist	David Maloney	(561) 681-6618	David.Maloney@FloridaDEP.gov
Environmental Specialist	Calvin Williams	(561) 681-6735	Calvin.E.Williams@FloridaDEP.gov

DEP – Southwest District - 13051 N. Telecom Pkwy, Temple Terrace, FL 33637-0926

Title	Name	Phone	E-mail
Environmental Manager	James (Jayme) Brock	(813) 470-5737	James.Brock@FloridaDEP.gov
Environmental Consultant	Leslie Pedigo	(813) 470-5870	Leslie.Pedigo@FloridaDEP.gov
Environmental Specialist	Sarah Brownlee	(813) 470-5911	Sarah.Brownlee@FloridaDEP.gov
Environmental Specialist	Hannah Westervelt	(813) 470-5752	Hannah.Westervelt@FloridaDEP.gov

Storage Tank Compliance

Program Contacts

DEP – Compliance Assistance Program – Storage Tank Compliance

2600 Blair Stone Road, Tallahassee, FL 32399-2400

Title	Name	Phone	E-mail
Environmental Administrator	Amanda Dorsett	(850) 245-8931	Amanda.Dorsett@FloridaDEP.gov
Environmental Consultant	Kim Curran	(850) 245-8849	Kimberley.Curran@FloridaDEP.gov
Environmental Specialist	Zach Barrett	(850) 245-8769	Zachary.Barrett@FloridaDEP.gov

Financial Responsibility Contacts

DEP – Storage Tank Financial Responsibility

2600 Blair Stone Road, Tallahassee, FL 32399-2400

Districts Covered	Name	Phone	E-mail
South and Southwest	Tor Bejnar	(850) 245-8743	Tor.Bejnar@FloridaDEP.gov
Northeast and Southeast	Edgar Echevarria*	(850) 245-8793	Edgar.Echevarria@FloridaDEP.gov
Central and Northwest	Susan F. Eldredge	(850) 245-8740	Susan.F.Eldredge@FloridaDEP.gov

**Note: Edgar Echevarria - disponible para ayuda en español*

Website: Storage Tank Financial Responsibility

Equipment Registration and Alternative Procedures

DEP – Equipment Registration

2600 Blair Stone Road, MS 4560, Tallahassee, FL 32399-2400; Email: **Tanknotify@FloridaDEP.gov**

Contact	Phone	E-mail
Kim Curran	(850) 245-8849	Kimberley.Curran@FloridaDEP.gov

DEP – Alternative Procedures, Tank and Line Testing Approvals and Technical Inquiries

District and Business Support - 2600 Blair Stone Road, MS 4500, Tallahassee, FL 32399-2400;
Email: **Tanknotify@FloridaDEP.gov**

Contact	Phone	E-mail
Elena Compton, PE II	(850) 245-8911	Elena.Compton@FloridaDEP.gov

Facility Registration Contacts

DEP – Storage Tank Facility Registration

2600 Blair Stone Road, MS 4525, Tallahassee, FL 32399-2400
Main Phone: **(850) 245-8839**; Fax (850) 412-0405; E-mail: **TankRegistration@FloridaDEP.gov**

Registration Contacts	Phone	E-mail
Karen Moore (Administrator)	(850) 245-8864	Karen.S.Moore@FloridaDEP.gov
Andrea McGill	(850) 245-8840	Andrea.McGill@FloridaDEP.gov
Madhuri Madala	(850) 245-8834	Madhuri.Madala@FloridaDEP.gov
Ernest Stephens	(850) 245-8847	Ernest.L.Stephens@FloridaDEP.gov
Derbra Owete	(850) 245-8732	Derbra.Owete@FloridaDEP.gov

Registration - Electronic Self-Service Application Portal (ESSA)

- With the Online Services Business Portal (ESSA) you can:
  - Pay Invoices | Print Placards |Update Facility Information | Register New Facilities
- See website for online registration instructions and information: Storage Tank Facility Registration

Storage Tank Compliance County Contact List

Alachua County Environmental Protection Department

408 West University Avenue, Suite 106, Gainesville, FL 32601
Main Phone: (352) 264-6843; Fax: (352) 264-6852

Title	Name	Phone	E-mail
Contract Mgr/Supervisor	Ted Goodman	(352) 264-6843	tgoodman@alachuacounty.us
Inspector	Richard Harrington	(352) 278-7719	rharrington@alachuacounty.us
Inspector	Mike Keim	(352) 213-4986	mkeim@alachuacounty.us
Inspector	Robert Zimmerman	(352) 359-3523	rzimmerman@alachuacounty.us
Inspector	Tim Ramsey	(352) 213-0691	thr@alachuacounty.us

Baker County – City of Jacksonville Environmental Quality Division

214 North Hogan Street, 5th Floor, Jacksonville, FL 32202
Main Phone: (904) 255-7100; Fax: (904) 630-3637

Title	Name	Phone	E-mail
Contract Mgr/Supvr	Jean Richards	(904) 255-7137	jeanr@coj.net
Inspector	Patrick Mondo	(904) 255-7160	pmondo@coj.net
Inspector	Raynald Lunn	(904) 255-7159	rlunn@coj.net
Inspector	Hali Gregory	(904) 255-7165	hgregory@coj.net
Inspector	Mike Westerman	(904) 255-7170	mwesterman@coj.net
Inspector	Kelly Vermillion	(904) 255-7194	kvermillion@coj.net

Bay County – Florida Department of Health in Escambia County

1300 West Gregory Street, Pensacola, FL 32502
Main Phone: (850) 595-6707; Fax: (850) 595-6774

Title	Name	Phone	E-mail
Contract Mgr/Supvr	Gregory Berrian	(850) 595-6700 ext. 2040	Gregory.Berrian@flhealth.gov
Inspector	Muhammad (Rafiq) Khan	(850) 258-8546	Muhammad.Khan@flhealth.gov
Inspector	Regiene Pangahas	(850) 595-6700 ext. 2007	Regiene.Pangahas@flhealth.gov
Inspector			
Office Contact	Monica Wilson	(850) 595-6700 ext. 2004	Monica.Wilson@flhealth.gov

Bradford County - Alachua County Environmental Protection Department

408 West University Avenue, Suite 106, Gainesville, FL 32601
Main Phone: (352) 264-6843; Fax: (352) 264-6852

Title	Name	Phone	E-mail
Contract Mgr/Supvr	Ted Goodman	(352) 264-6843	tgoodman@alachuacounty.us
Inspector	Richard Harrington	(352) 278-7719	rharrington@alachuacounty.us
Inspector	Mike Keim	(352) 213-4986	mkeim@alachuacounty.us
Inspector	Robert Zimmerman	(352) 359-3523	rzimmerman@alachuacounty.us
Inspector	Tim Ramsey	(352) 213-0691	thr@alachuacounty.us

Brevard County Natural Resources Management Department
2725 Judge Fran Jamieson Way, Bldg A, Suite 219, Viera, FL 32940
Main Phone: (321) 633-2017

Title	Name	Phone	E-mail
Contract Manager	Douglas Divers	(321) 633-2017 ext. 23	Doug.Divers@brevardfl.gov
Inspector	Katie West	(321) 633-2017 ext. 12	Katie.West@brevardfl.gov
Inspector	Chris Ulrich	(321) 633-2017 ext. 11	Chris.Ulrich@brevardfl.gov

Broward County Environmental Protection and Growth Management Department
Environmental and Consumer Protection Division
1 North University Drive, Suite 203, Plantation, FL 33324
Main Phone: (954) 519-1260; Fax: (954) 765-4804

Title	Name	Phone	E-mail
Contract Manager	Ali H. Younes	(954) 519-1486	ayounes@broward.org
Tech Support/Supervisor	Alfred Reid, P.E.	(954) 519-1432	areid@broward.org
Supervisor	Alfred Gomez	(954) 519-1259	agomez@broward.org
Supervisor	Eduardo Koenig	(954) 740-0231	ekoenig@broward.org
Tech Support Engineer	John Sainval	(954) 519-1229	jsainval@broward.org
Inspector	Tom Mangin	(954) 818-7529	tmangin@broward.org
Inspector	Clearvens Jean-Baptiste	(954) 818-7541	cjeanbaptiste@broward.org
Inspector	Dale Scott	(954) 818-6279	dscott@broward.org
Inspector	Steve Lecsaint	(954) 465-1718	slecsaint@broward.org
Inspector	Aneese Williams	(954) 818-7531	aneesewilliams@broward.org
Inspector	Andrew Whitaker	(954) 465-3800	awhitaker@broward.org
Inspector	Nalinie Ramnaraine	(954) 465-9385	nramnaraine@broward.org
Inspector	Kayla Acosta	(954) 818-7547	kacosta@broward.org

Calhoun County – Florida Department of Health in Gulf County
2475 Garrison Avenue, Port Saint Joe, FL 32456
Main Phone: (850) 227-1276; ext. 125; Fax: (850) 227-7589

Title	Name	Phone	E-mail
Contract Manager	Sarah Hinds	(850) 227-1276 ext. 0403	sarah.hinds@flhealth.gov
Inspector	Zachary Hodges	(850) 227-1276 ext. 0418	zachary.hodges@flhealth.gov
Inspector	Torie Burgess	(850) 227-1276 ext. 0434	torie.burgess@flhealth.gov

Charlotte County – Lee County Division of Natural Resources
1500 Monroe Street, Third Floor, (mailing) P.O. Box 398, Fort Myers, FL 33902
Main Phone: (239) 694-0929; Fax: (239) 694-2832

Title	Name	Phone	E-mail
Contract Manager	Lisa Kreiger	(239) 533-8129	LKreiger@leegov.com
Inspector	Mark Sautter	(239) 694-4593	MSautter@leegov.com
Inspector	Keith Kleinmann	(239) 694-2978	KKleinmann@leegov.com

Citrus County – Florida Department of Health
3600 West Sovereign Path, Suite 194, Lecanto, FL 34461-8070
Main Phone: (352) 513-6100; Fax: (352) 527-5316

Title	Name	Phone	E-mail
Contract Manager	Glenn W. Bryant	(352) 513-6102	Glenn.Bryant@flhealth.gov
Inspector	Teresa Anton	(352) 513-6101	Teresa.Anton@flhealth.gov
Inspector	P. Connor Mulligan	(352) 513-6105	Padraic.Mulligan@flhealth.gov
Inspector	Matt Lee	(352) 513-6107	Matthew.Lee@flhealth.gov

Clay County - Alachua County Environmental Protection Department
408 West University Avenue, Suite 106, Gainesville, FL 32601
Main Phone: (352) 264-6843; Fax: (352) 264-6852

Title	Name	Phone	E-mail
Contract Mgr/Supvr	Ted Goodman	(352) 264-6843	tgoodman@alachuacounty.us
Inspector	Richard Harrington	(352) 278-7719	rharrington@alachuacounty.us
Inspector	Mike Keim	(352) 213-4986	mkeim@alachuacounty.us
Inspector	Robert Zimmerman	(352) 359-3523	rzimmerman@alachuacounty.us
Inspector	Tim Ramsey	(352) 213-0691	thr@alachuacounty.us

Collier County Solid & Hazardous Waste Management Division
3339 Tamiami Trail East, Suite 302, Naples, FL 34112-5361
Main Phone: (239) 252-2508; Fax: (239) 252-6580

Title	Name	Phone	E-mail
Contract Manager	Phil Snyderburn	(239) 207-0920	Phil.Snyderburn@colliercountyfl.gov
Inspector	Tom Bates	(239) 207-1436	Thomas.Bates@colliercountyfl.gov
Inspector	Nicole Jensen	(239) 252-7958	Nicole.Jensen@colliercountyfl.gov

Columbia County – Alachua County Environmental Protection Department
408 West University Avenue, Suite 106, Gainesville, FL 32601
Main Phone: (352) 264-6843; Fax: (352) 264-6852

Title	Name	Phone	E-mail
Contract Mgr/Supvr	Ted Goodman	(352) 264-6843	tgoodman@alachuacounty.us
Inspector	Richard Harrington	(352) 278-7719	rharrington@alachuacounty.us
Inspector	Mike Keim	(352) 213-4986	mkeim@alachuacounty.us
Inspector	Robert Zimmerman	(352) 359-3523	rzimmerman@alachuacounty.us
Inspector	Tim Ramsey	(352) 213-0691	thr@alachuacounty.us

Miami-Dade County Department of Regulatory & Economic Resources
701 NW 1st Court, Suite 700, Miami, FL 33136
Main Phone: (305) 372-6789; Fax: (305) 372-6729

Title	Name	Phone	E-mail
Contract Manager	Bernardo Bieler, P.E.	(305) 372-6907	Bernardo.Bieler@miamidade.gov
Supervisor	Patti Emad	(305) 372-6607	Patti.Emad@miamidade.gov
Inspector	Ana Chirino	(305) 372-6802	Ana.Chirino@miamidade.gov
Inspector	Kelly Dashtaki	(305) 372-6613	Kelly.Dashtaki@miamidade.gov
Inspector	Victor Cabrera	(305) 372-6409	Victor.Cabrera@miamidade.gov
Inspector	Alex De Zayas	(305) 372-6524	Alejandro.Dezayas@miamidade.gov
Inspector	Annia SanPedro	(305) 372-6627	Annia.SanPedro@miamidade.gov
Inspector	Jorge Cano Salom	(305)-372-6592	Jorge.CanoSalom@miamidade.gov
Inspector	*Pending*		
Inspector	*Pending*		

DeSoto County - Lee County Division of Natural Resources
1500 Monroe Street, Third Floor, (mailing) P.O. Box 398, Fort Myers, FL33902
Main Phone: (239) 694-0929; Fax: (239) 694-2832

Title	Name	Phone	E-mail
Contract Manager	Lisa Kreiger	(239) 533-8129	LKreiger@leegov.com
Inspector	Mark Sautter	(239) 694-4593	MSautter@leegov.com
Inspector	Keith Kleinmann	(239) 694-2978	KKleinmann@leegov.com

Dixie County – Alachua County Environmental Protection Department
408 West University Avenue, Suite 106, Gainesville, FL32601
Main Phone: (352) 264-6843; Fax: (352) 264-6852

Title	Name	Phone	E-mail
Contract Mgr/Supvr	Ted Goodman	(352) 264-6843	tgoodman@alachuacounty.us
Inspector	Richard Harrington	(352) 278-7719	rharrington@alachuacounty.us
Inspector	Mike Keim	(352) 213-4986	mkeim@alachuacounty.us
Inspector	Robert Zimmerman	(352) 359-3523	rzimmerman@alachuacounty.us
Inspector	Tim Ramsey	(352) 213-0691	thr@alachuacounty.us

Duval County - City of Jacksonville Environmental Quality Division
214 North Hogan Street, 5th Floor, Jacksonville, FL 32202
Main Phone: (904) 255-7100; Fax: (904) 630-3637

Title	Name	Phone	E-mail
Contract Mgr/Supvr	Jean Richards	(904) 255-7137	jeanr@coj.net
Inspector	Patrick Mondo	(904) 255-7160	pmondo@coj.net
Inspector	Raynald Lunn	(904) 255-7159	rlunn@coj.net
Inspector	Hali Gregory	(904) 255-7165	hgregory@coj.net
Inspector	Mike Westerman	(904) 255-7170	mwesterman@coj.net
Inspector	Kelly Vermillion	(904) 255-7194	kvermillion@coj.net

Escambia County Health Unit
1300 West Gregory Street, Pensacola, FL 32502
Main Phone: (850) 595-6700 then #; Fax: (850) 595-6709

Title	Name	Phone	E-mail
Contract Mgr/Supvr	Gregory Berrian	(850) 595-6700 ext. 2040	Gregory.Berrian@flhealth.gov
Inspector	Charles Payne (Pensacola)	(850) 595-6700 ext. 2010	Charles.Payne@flhealth.gov
Inspector	Rafiq Khan (Panama City)	(850) 258-8546	Muhammad.Khan@flhealth.gov
Inspector	Shane Bragg (Pensacola)	(850) 595-6700 ext. 2011	Shane.Bragg@flhealth.gov
Inspector	Regiene Pangahas (Pensacola)	(850) 595-6700 ext. 2007	Regiene.Pangahas@flhealth.gov
Office Contacts	Monica Wilson	(850) 595-6700 ext. 2004	Monica.Wilson@flhealth.gov

Flagler County – Alachua County Environmental Protection Department
408 West University Avenue, Suite 106, Gainesville, FL 32601
Main Phone: (352) 264-6843; Fax: (352) 264-6852

Title	Name	Phone	E-mail
Contract Mgr/Supvr	Ted Goodman	(352) 264-6843	tgoodman@alachuacounty.us
Inspector	Richard Harrington	(352) 278-7719	rharrington@alachuacounty.us
Inspector	Mike Keim	(352) 213-4986	mkeim@alachuacounty.us
Inspector	Robert Zimmerman	(352) 359-3523	rzimmerman@alachuacounty.us
Inspector	Tim Ramsey	(352) 213-0691	thr@alachuacounty.us

Franklin County – Florida Department of Health in Gulf County
2475 Garrison Avenue, Port Saint Joe, FL 32456
Main Phone: (850) 227-1276 ext. 125; Fax: (850) 227-7589

Title	Name	Phone	E-mail
Contract Manager	Sarah Hinds	(850) 227-1276 ext. 0403	sarah.hinds@flhealth.gov
Inspector	Zachary Hodges	(850) 227-1276 ext. 0418	zachary.hodges@flhealth.gov
Inspector	Torie Burgess	(850) 227-1276 ext. 0434	torie.burgess@flhealth.gov

Gadsden County – Leon County Growth & Environment
435 N. Macomb Street, Renaissance Center, Tallahassee, FL 32301
Main Phone: (850) 606-1300; Fax: (850) 606-1301

Title	Name	Phone	E-mail
Contract Manager	Robert Bass	(850) 606-1300 ext. 1314	BassR@leoncountyfl.gov
Supervisor	Edwin (Chris) French	(850) 606-1300 ext. 1329	frenche@leoncountyfl.gov
Inspector	Dennis Hatcher	(850) 606-1300 ext. 1337	hatcherj@leoncountyfl.gov

Gilchrist County – Alachua County Environmental Protection Department
408 West University Avenue, Suite 106, Gainesville, FL 32601
Main Phone: (352) 264-6843; Fax: (352) 264-6852

Title	Name	Phone	E-mail
Contract Mgr/Supvr	Ted Goodman	(352) 264-6843	tgoodman@alachuacounty.us
Inspector	Richard Harrington	(352) 278-7719	rharrington@alachuacounty.us
Inspector	Mike Keim	(352) 213-4986	mkeim@alachuacounty.us
Inspector	Robert Zimmerman	(352) 359-3523	rzimmerman@alachuacounty.us
Inspector	Tim Ramsey	(352) 213-0691	thr@alachuacounty.us

Glades County – Florida Department of Health in Okeechobee County
1728 Northwest 9th Avenue, Okeechobee, FL 34972-4340
Main Phone: (863) 462-5811; Fax: (863) 462-5218

Title	Name	Phone	E-mail
Contract Manager	Tiffany Collins	(863) 462-5761	Tiffany.Collins@flhealth.gov
Supervisor	Douglas McCoy	(863) 462-5811	Douglas.Mccoy@flhealth.gov
Inspector	Douglas McCoy	(863) 462-5811	Douglas.Mccoy@flhealth.gov

Gulf County - Florida Department of Health
2475 Garrison Avenue, Port Saint Joe, FL 32456
Main Phone: (850) 227-1276 ext. 125; Fax: (850) 227-7589

Title	Name	Phone	E-mail
Contract Manager	Sarah Hinds	(850) 227-1276 ext. 0403	sarah.hinds@flhealth.gov
Inspector	Zachary Hodges	(850) 227-1276 ext. 0418	zachary.hodges@flhealth.gov
Inspector	Torie Burgess	(850) 227-1276 ext. 0434	torie.burgess@flhealth.gov

Hamilton County - Alachua County Environmental Protection Department
408 West University Avenue, Suite 106, Gainesville, FL 32601
Main Phone: (352) 264-6843; Fax: (352) 264-6852

Title	Name	Phone	E-mail
Contract Mgr/Supvr	Ted Goodman	(352) 264-6843	tgoodman@alachuacounty.us
Inspector	Richard Harrington	(352) 278-7719	rharrington@alachuacounty.us
Inspector	Mike Keim	(352) 213-4986	mkeim@alachuacounty.us
Inspector	Robert Zimmerman	(352) 359-3523	rzimmerman@alachuacounty.us
Inspector	Tim Ramsey	(352) 213-0691	thr@alachuacounty.us

Hardee County - Florida Department of Health in Polk County
1805 Hobbs Road, Auburndale, FL 33823
Main Phone: (863) 519-8330 Option #5; Fax: (863) 837-1488

Title	Name	Phone	E-mail
Contract Mgr/Supvr	Steve Jarrett	863-269-4355	Steven.Jarrett@flhealth.gov
Inspector	Lacey Glenn	863-269-4350	Lacey.Glenn@flhealth.gov
Inspector	Carol Cassels	863-269-4315	Carol.Cassels@flhealth.gov
Inspector	*Pending*		

Hendry County – Florida Department of Health in Okeechobee County

1728 Northwest 9th Avenue, Okeechobee, FL 34972-4340
Main Phone: (863) 462-5811; Fax: (863) 462-5218

Title	Name	Phone	E-mail
Contract Manager	Tiffany Collins	(863) 462-5761	Tiffany.Collins@flhealth.gov
Supervisor	Douglas McCoy	(863) 462-5811	Douglas.Mccoy@flhealth.gov
Inspector	Douglas McCoy	(863) 462-5811	Douglas.Mccoy@flhealth.gov

Hernando County - Florida Department of Health in Citrus County

3600 West Sovereign Path, Suite 194, Lecanto, FL 34461-8070
Main Phone: (352) 513-6100; Fax: (352) 527-5316

Title	Name	Phone	E-mail
Contract Manager	Glenn W. Bryant	(352) 513-6102	Glenn.Bryant@flhealth.gov
Inspector	Teresa Anton	(352) 513-6101	Teresa.Anton@flhealth.gov
Inspector	P. Connor Mulligan	(352) 513-6105	Padraic.Mulligan@flhealth.gov
Inspector	Matt Lee	(352) 513-6107	Matthew.Lee@flhealth.gov

Highlands County - Florida Department of Health in Okeechobee County

1728 Northwest 9th Avenue, Okeechobee, FL 34972-4340
Main Phone: (863) 462-5811; Fax: (863) 462-5218

Title	Name	Phone	E-mail
Contract Manager	Tiffany Collins	(863) 462-5761	Tiffany.Collins@flhealth.gov
Supervisor	Douglas McCoy	(863) 462-5811	Douglas.Mccoy@flhealth.gov
Inspector	Douglas McCoy	(863) 462-5811	Douglas.Mccoy@flhealth.gov

Hillsborough County Environmental Protection Commission Office

3629 Queen Palm Drive, Tampa, FL 33619
Main Phone: (813) 627-2600; Fax: (813) 627-2640

Title	Name	Phone	E-mail
Contract Manager	Hooshang Boostani	(813) 627-2600 ext. 1293	boostani@epchc.org
Inspector	Amanda Moseley	(813) 627-2600 ext. 1333	MoseleyA@epchc.org
Inspector	Katie Young	(813) 627-2600 ext. 1220	YoungK@epchc.org
Inspector	Gabrielle Nataline	(813) 627-2600 ext. 1226	natalineg@epchc.org
Inspector	Kelsey Jones	(813) 627-2600 ext. 1455	jonesk@epchc.org
Inspector	Cody Winter	(813) 627-2600 ext. 1429	winterc@epchc.org
Inspector	*Pending*		

Holmes County – Florida Department of Health in Escambia County

1300 West Gregory Street, Pensacola, FL 32502
Main Phone: (850) 595-6707; Fax: (850) 595-6774

Title	Name	Phone	E-mail
Contract Mgr/Supvr	Gregory Berrian	(850) 595-6700 ext. 2040	Gregory.Berrian@flhealth.gov
Inspector	Regiene Pangahas	(850) 595-7600 ext. 2007	Regiene.Pangahas@flhealth.gov
Inspector	Rafiq Khan	(850) 258-8546	Muhammad.Khan@flhealth.gov
Office Contact	Monica Wilson	(850) 595-6700 ext. 2004	Monica.Wilson@flhealth.gov

Indian River - Brevard County Natural Resources Management Office
2725 Judge Fran Jamieson Way, Bldg A, Suite 219, Viera, FL 32940
Main Phone: (321) 633-2017

Title	Name	Phone	E-mail
Contract Manager	Douglas Divers	(321) 633-2017 ext. 23	Doug.Divers@brevardfl.gov
Inspector	Katie West	(321) 633-2017 ext. 12	Katie.West@brevardfl.gov
Inspector	Chris Ulrich	(321) 633-2017 ext. 11	Chris.Ulrich@brevardfl.gov

Jackson County - Florida Department of Health in Gulf County
2475 Garrison Avenue, Port Saint Joe, FL 32456
Main Phone: (850) 227-1276 ext. 125; Fax: (850) 227-7589

Title	Name	Phone	E-mail
Contract Manager	Sarah Hinds	(850) 227-1276 ext. 0403	sarah.hinds@flhealth.gov
Inspector	Zachary Hodges	(850) 227-1276 ext. 0418	zachary.hodges@flhealth.gov
Inspector	Torie Burgess	(850) 227-1276 ext. 0434	torie.burgess@flhealth.gov

Jefferson County – Leon County Growth & Environment
1255 West Washington Street, Monticello, FL 32344
Main Phone: (850) 342-0170 ext. 2201; Fax: (850) 342-0314

Title	Name	Phone	E-mail
Contract Manager	Robert Bass	(850) 606-1300 ext. 1314	bassr@leoncountyfl.gov
Supervisor	Edwin (Chris) French	(850) 606-1300 ext. 1329	frenche@leoncountyfl.gov
Inspector	Dennis Hatcher	(850) 606-1300 ext. 1337	hatcherj@leoncountyfl.gov

Lafayette County - Alachua County Environmental Protection Department
408 West University Avenue, Suite 106, Gainesville, FL 32601
Main Phone: (352) 264-6843; Fax: (352) 264-6852

Title	Name	Phone	E-mail
Contract Mgr/Supvr	Ted Goodman	(352) 264-6843	tgoodman@alachuacounty.us
Inspector	Richard Harrington	(352) 278-7719	rharrington@alachuacounty.us
Inspector	Mike Keim	(352) 213-4986	mkeim@alachuacounty.us
Inspector	Robert Zimmerman	(352) 359-3523	rzimmerman@alachuacounty.us
Inspector	Tim Ramsey	(352) 213-0691	thr@alachuacounty.us

Lake County – Orange County Environmental Protection
3165 McCrory Place, Ste. 200, Orlando, FL 32803
Main Phone: (407) 836-1400; Fax: (407) 836-1499

Title	Name	Phone	E-mail
Contract Manager	David Jones	(407) 836-1405	David.Jones2@ocfl.net
Supervisor	Ruth Rauenzahn	(407) 836-1475	ruth.rauenzahn@ocfl.net
Inspector	Glen Becker	(407) 836-1453	glen.becker@ocfl.net
Inspector	Charles Cox	(407) 558-1619	charles.cox@ocfl.net

Lee County Division of Natural Resources

1500 Monroe Street, Third Floor, (mailing) P.O. Box 398, Fort Myers, FL 33902
Main Phone: (239) 694-0929; Fax: (239) 694-2832

Title	Name	Phone	E-mail
Contract Manager	Lisa Kreiger	(239) 533-8129	LKreiger@leegov.com
Inspector	Mark Sautter	(239) 694-4593	MSautter@leegov.com
Inspector	Keith Kleinmann	(239) 694-2978	KKleinmann@leegov.com

Leon County Department of Growth & Environmental Management

435 N. Macomb Street, Renaissance Center, Tallahassee, FL 32301
Main Phone: (850) 606-1300; Fax: (850)606-1301

Title	Name	Phone	E-mail
Contract Manager	Robert Bass	(850) 606-1300 ext. 1314	bassr@leoncountyfl.gov
Supervisor	Edwin (Chris) French	(850) 606-1300 ext. 1329	frenche@leoncountyfl.gov
Inspector	Dennis Hatcher	(850) 606-1300 ext. 1337	hatcherj@leoncountyfl.gov

Levy County - Alachua County Environmental Protection Department

408 West University Avenue, Suite 106, Gainesville, FL 32601
Main Phone: (352) 264-6843; Fax: (352) 264-6852

Title	Name	Phone	E-mail
Contract Mgr/Supvr	Ted Goodman	(352) 264-6843	tgoodman@alachuacounty.us
Inspector	Richard Harrington	(352) 278-7719	rharrington@alachuacounty.us
Inspector	Mike Keim	(352) 213-4986	mkeim@alachuacounty.us
Inspector	Robert Zimmerman	(352) 359-3523	rzimmerman@alachuacounty.us
Inspector	Tim Ramsey	(352) 213-0691	thr@alachuacounty.us

Liberty County - Florida Department of Health in Gulf County

2475 Garrison Avenue, Port Saint Joe, FL 32456
Main Phone: (850) 227-1276 ext. 125; Fax: (850) 227-7589

Title	Name	Phone	E-mail
Contract Manager	Sarah Hinds	(850) 227-1276 ext. 0403	sarah.hinds@flhealth.gov
Inspector	Zachary Hodges	(850) 227-1276 ext. 0418	zachary.hodges@flhealth.gov
Inspector	Torie Burgess	(850) 227-1276 ext. 0434	torie.burgess@flhealth.gov

Madison County - Alachua County Environmental Protection Department

408 West University Avenue, Suite 106, Gainesville, FL 32601
Main Phone: (352) 264-6843; Fax: (352) 264-6852

Title	Name	Phone	E-mail
Contract Mgr/Supvr	Ted Goodman	(352) 264-6843	tgoodman@alachuacounty.us
Inspector	Richard Harrington	(352) 278-7719	rharrington@alachuacounty.us
Inspector	Mike Keim	(352) 213-4986	mkeim@alachuacounty.us
Inspector	Robert Zimmerman	(352) 359-3523	rzimmerman@alachuacounty.us
Inspector	Tim Ramsey	(352) 213-0691	thr@alachuacounty.us

Manatee County – Hillsborough County EPC
3629 Queen Palm Drive, Tampa, FL 33619
Main Phone: (813) 627-2600; Fax: (813) 627-2640

Title	Name	Phone	E-mail
Contract Manager	Hooshang Boostani	(813) 627-2600 ext. 1293	boostani@epchc.org
Inspector	Amanda Moseley	(813) 627-2600 ext. 1333	MoseleyA@epchc.org
Inspector	Mark Trethewey	(941) 742-5980 x 1880	Mark.Trethewey@mymanatee.org

Marion County - Alachua County Environmental Protection Department
408 West University Avenue, Suite 106, Gainesville, FL 32601
Main Phone: (352) 264-6843; Fax: (352) 264-6852

Title	Name	Phone	E-mail
Contract Mgr/Supervisor	Ted Goodman	(352) 264-6843	tgoodman@alachuacounty.us
Inspector	Richard Harrington	(352) 278-7719	rharrington@alachuacounty.us
Inspector	Mike Keim	(352) 213-4986	mkeim@alachuacounty.us
Inspector	Robert Zimmerman	(352) 359-3523	rzimmerman@alachuacounty.us
Inspector	Tim Ramsey	(352) 213-0691	thr@alachuacounty.us

Martin County – Palm Beach County Environmental Resources Management
2300 N. Jog Road, 4th Floor, West Palm Beach, FL 33411
Main Phone: (561) 233-2400; Fax: (561) 233-2414

Title	Name	Phone	E-mail
Contract Manager	Deborah Drum	(561) 233-2454	DDrum@pbcgov.org
Supervisor	Roberta Dusky	(561) 681-3859	RDusky@pbcgov.org
Lead Inspector	Martha Rutherfoord	(772) 486-7262	mrutherfoord@pbcgov.org

Monroe County - Florida Department of Health (Lower Keys)
1100 Simonton Street, Key West, FL 33040
Main Phone: (305) 293-7544; Fax: (305) 293-7525

Title	Name	Phone	E-mail
Contract Manager	Robert Eadie	(305) 809-5610	Bob.Eadie@FLHealth.gov
Supervisor/Inspector	Michael Winkler	(305) 684-9120	Michael.Winkler@flhealth.gov
Inspector	Michael Winkler	(305) 684-9120	Michael.Winkler@flhealth.gov

Monroe County - Florida Department of Health (Middle Keys)
102050 Overseas Highway, Suite 202, Key Largo, FL 33037
Main Phone: (305)453-8755; Fax: (305) 453-8759

Title	Name	Phone	E-mail
Contract Manager	Robert Eadie	(305) 809-5610	Bob.Eadie@FLHealth.gov
Supervisor	Michael Winkler	(305) 684-9120	Michael.Winkler@flhealth.gov
Inspector	Eric Roberts	(619) 457-7555	Eric.Roberts@flhealth.gov

Monroe County - Florida Department of Health (Upper Keys)
102050 Overseas Highway, Suite 202, Key Largo, FL 33037
Main Phone: (305)453-8755; Fax: (305) 453-8759

Title	Name	Phone	E-mail
Contract Manager	Robert Eadie	(305) 809-5610	Bob.Eadie@FLHealth.gov
Supervisor	Michael Winkler	(305) 684-9120	Michael.Winkler@flhealth.gov
Inspector	Michael Winkler	(305) 684-9120	Michael.Winkler@flhealth.gov

Nassau County – City of Jacksonville Environmental Quality Division
214 North Hogan Street, 5th Floor, Jacksonville, FL 32202
Main Phone: (904) 255-7100; Fax: (904) 630-3637

Title	Name	Phone	E-mail
Contract Mgr/Supvr	Jean Richards	(904) 255-7137	jeanr@coj.net
Inspector	Patrick Mondo	(904) 255-7160	pmondo@coj.net
Inspector	Raynald Lunn	(904) 255-7159	rlunn@coj.net
Inspector	Hali Gregory	(904) 255-7165	hgregory@coj.net
Inspector	Mike Westerman	(904) 255-7170	mwesterman@coj.net
Inspector	Kelly Vermillion	(904) 255-7194	kvermillion@coj.net

Okaloosa County - Florida Department of Health in Escambia County
1300 West Gregory Street, Pensacola, FL 32502
Main Phone: (850) 595-670; Fax: (850) 595-6774

Title	Name	Phone	E-mail
Contract Mgr/Supvr	Gregory Berrian	(850) 595-6700 ext. 2040	Gregory.Berrian@flhealth.gov
Inspector	Muhammad (Rafiq) Khan	(850) 258-8546	Muhammad.Khan@flhealth.gov
Inspector	Charles Payne	(850) 595-6700 ext. 2010	Charles.Payne@flhealth.gov
Inspector	Regiene Pangahas	(850) 595-6700 ext. 2007	Regiene.Pangahas@flhealth.gov
Inspector			
Office Contact	Monica Wilson	(850) 595-6700 ext. 2004	Monica.Wilson@flhealth.gov

Okeechobee County - Florida Department of Health
1728 Northwest 9th Avenue, Okeechobee, FL 34972-4340
Main Phone: (863) 462-5811; Fax: (863) 462-5218

Title	Name	Phone	E-mail
Contract Manager	Tiffany Collins	(863) 462-5761	Tiffany.Collins@flhealth.gov
Supervisor	Douglas McCoy	(863) 462-5811	Douglas.Mccoy@flhealth.gov
Inspector	Douglas McCoy	(863) 462-5811	Douglas.Mccoy@flhealth.gov

Orange County Environmental Protection Division

3165 McCrory Place, Ste. 200, Orlando, FL 32803
Main Phone: (407) 836-1400; Fax: (407) 836-1499

Title	Name	Phone	E-mail
Contract Manager	David Jones	(407) 836-1405	David.Jones2@ocfl.net
Supervisor	Ruth Rauenzahn	(407) 836-1475	ruth.rauenzahn@ocfl.net
Inspector	Glen Becker	(321) 689-8389	glen.becker@ocfl.net
Inspector	Charles Cox	(407) 558-1619	charles.cox@ocfl.net
Inspector	Jackie Perry	(321) 239-4050	jacqueline.perry@ocfl.net
Inspector	Brittany Finney	(321) 689-8611	brittany.finney@ocfl.net
Inspector	Jose Sanchez	(407) 558-0744	Jose.Sanchez@ocfl.net
Inspector	Keith Williamson	(321) 689-4078	keith.williamson@ocfl.net

Osceola County – Orange County Environmental Protection

3165 McCrory Place, Ste. 200, Orlando, FL 32803
Main Phone: (407) 836-1400; Fax: (407) 836-1499

Title	Name	Phone	E-mail
Contract Manager	David Jones	(407) 836-1405	David.Jones2@ocfl.net
Supervisor	Ruth Rauenzahn	(407) 836-1475	ruth.rauenzahn@ocfl.net
Inspector	Glen Becker	(407) 836-1453	glen.becker@ocfl.net

Palm Beach County Environmental Resources Management

2300 N. Jog Road, 4th Floor, West Palm Beach, FL 33411
Main Phone: (561) 233-2400; Fax: (561) 233-2414

Title	Name	Phone	E-mail
Contract Manager	Deborah Drum	(561) 233-2454	DDrum@pbcgov.org
Supervisor	Roberta Dusky	(561) 681-3859	RDusky@pbcgov.org
Lead Inspector	Jonathan Arline	(561) 233-2535	jarline@pbcgov.org
Inspector	Charmaine Morrison	(561) 233-2506	cmorriso@pbcgov.org
Inspector	Marilyn Coppola	(561) 233-2522	MCoppola@pbcgov.org
Inspector	Brighton Hall	(561) 233-2533	BHall@pbcgov.org
Inspector	Andrew Jensen	(561) 233-2504	AJensen@pbcgov.org
Administrative	Kim Esau	(561) 233-2520	kesau@pbcgov.org

Pasco County – Florida Department of Health in Pinellas County

8751 Ulmerton Road, Largo, FL 33771-3832
Main Phone: (727) 538-7277; Fax: (727) 538-7293

Title	Name	Phone	E-mail
Contract Manager	Charles Minor	(727) 538-7277 ext. 6449	Charles.Minor@flhealth.gov
Supervisor	Scott Lashbrook	(727) 275-6458	Scott.Lashbrook2@flhealth.gov
Primary Inspector	George Juaristic	(727) 485-1817	George.Juaristic@flhealth.gov
Inspector	Randall Strauss	(727) 275-6467	Randall.Strauss@flhealth.gov
Inspector	Nathan Colson	(727) 820-4112	Nathan.Colson@flhealth.gov

Pinellas County - Florida Department of Health

8751 Ulmerton Road, Largo, FL 33771-3832
Main Phone: (727) 538-7277; Fax: (727) 538-7293

Title	Name	Phone	E-mail
Contract Manager	Charles Minor	(727) 538-7277 ext. 6449	Charles.Minor@flhealth.gov
Supervisor	Scott Lashbrook	(727) 275-6458	Scott.Lashbrook2@flhealth.gov
Inspector	Randall Strauss	(727) 275-6467	Randall.Strauss@flhealth.gov
Inspector	Nathan Colson	(727) 820-4112	Nathan.Colson@flhealth.gov
Inspector	George Juaristic	(727) 485-1817	George.Juaristic@flhealth.gov

Polk County - Florida Department of Health

1805 Hobbs Road, Auburndale, FL 33823
Main Phone: (863) 519-8330, Option #5; Fax: (863) 837-1488

Title	Name	Phone	E-mail
Contract Mgr/Supvr	Steve Jarrett	863-269-4355	Steven.Jarrett@flhealth.gov
Inspector	Lacey Glenn	863-269-4350	Lacey.Glenn@flhealth.gov
Inspector	Carol Cassels	863-269-4315	Carol.Cassels@flhealth.gov
Inspector	*Pending*		

Putnam County – Alachua County Environmental Protection Department

408 West University Avenue, Suite 106, Gainesville, FL 32601
Main Phone: (352) 264-6843; Fax: (352) 264-6852

Title	Name	Phone	E-mail
Contract Mgr/Supvr	Ted Goodman	(352) 264-6843	tgoodman@alachuacounty.us
Inspector	Richard Harrington	(352) 278-7719	rharrington@alachuacounty.us
Inspector	Mike Keim	(352) 213-4986	mkeim@alachuacounty.us
Inspector	Robert Zimmerman	(352) 359-3523	rzimmerman@alachuacounty.us
Inspector	Tim Ramsey	(352) 213-0691	thr@alachuacounty.us

St. Johns County - City of Jacksonville Environmental Quality Division

214 North Hogan Street, 5th Floor, Jacksonville, FL 32202
Main Phone: (904) 255-7100; Fax: (904) 630-3637

Title	Name	Phone	E-mail
Contract Mgr/Supvr	Jean Richards	(904) 255-7137	jeanr@coj.net
Inspector	Patrick Mondo	(904) 255-7160	pmondo@coj.net
Inspector	Raynald Lunn	(904) 255-7159	rlunn@coj.net
Inspector	Hali Gregory	(904) 255-7165	hgregory@coj.net
Inspector	Mike Westerman	(904) 255-7170	mwesterman@coj.net
Inspector	Kelly Vermillion	(904) 255-7194	kvermillion@coj.net

Saint Lucie County – Palm Beach County Environmental Resources Management
2300 N. Jog Road, 4th Floor, West Palm Beach, FL 33411
Main Phone: (561) 233-2400; Fax: (561) 233-2414

Title	Name	Phone	E-mail
Contract Manager	Deborah Drum	(561) 233-2454	DDrum@pbcgov.org
Supervisor	Roberta Dusky	(561) 681-3859	RDusky@pbcgov.org
Lead Inspector	Martha Rutherfoord	(772) 486-7262	mrutherfoord@pbcgov.org

Santa Rosa County - Florida Department of Health in Escambia County
1300 West Gregory Street, Pensacola, FL 32502
Main Phone: (850) 595-6707; Fax: (850) 595-6774

Title	Name	Phone	E-mail
Contract Mgr/Supvr	Gregory Berrian	(850) 595-6700 ext. 2040	Gregory.Berrian@flhealth.gov
Inspector	Charles Payne	(850) 595-6700 ext. 2010	Charles.Payne@flhealth.gov
Inspector	Shane Bragg	(850) 595-6700 ext. 2011	Shane.Bragg@flhealth.gov
Office Contact	Monica Wilson	(850) 595-6700 ext. 2004	Monica.Wilson@flhealth.gov

Sarasota County Air and Water Quality
1001 Sarasota Center Blvd., Sarasota, FL 34240
Main Phone: (941) 861-0675; Fax: (941) 861-6267

Title	Name	Phone	E-mail
Contract Manager	John Hickey, PE	(941) 861-0814	jhickey@scgov.net
Supervisor	Susan Murray	(941) 861-0605	smurray@scgov.net
Inspector	Maggie Murphy	(941) 202-3955	mamurphy@scgov.net
Inspector	Andrew Neuhaus	(941) 322-7052	aneuhaus@scgov.net

Seminole County – Orange County Environmental Protection
3165 McCrory Place, Ste. 200, Orlando, FL 32803
Main Phone: (407) 836-1400; Fax: (407) 836-1499

Title	Name	Phone	E-mail
Contract Manager	David Jones	(407) 836-1405	David.Jones2@ocfl.net
Supervisor	Ruth Rauenzahn	(407) 836-1475	ruth.rauenzahn@ocfl.net
Inspector	Glen Becker	(407) 836-1453	glen.becker@ocfl.net
Inspector	Brittany Finney	(321) 689-8611	brittany.finney@ocfl.net

Sumter County - Florida Department of Health in Citrus County
3600 West Sovereign Path, Suite 194, Lecanto, FL 34461-8070
Main Phone: (352) 513-6100; Fax: (352) 527-5316

Title	Name	Phone	E-mail
Contract Manager	Glenn W. Bryant	(352) 513-6102	Glenn.Bryant@flhealth.gov
Inspector	Teresa Anton	(352) 513-6101	Teresa.Anton@flhealth.gov
Inspector	P. Connor Mulligan	(352) 513-6105	Padraic.Mulligan@flhealth.gov
Inspector	Matt Lee	(352) 513-6107	Matthew.Lee@flhealth.gov

Suwannee County - Environmental Protection Department
408 West University Avenue, Suite 106, Gainesville, FL 32601
Main Phone: (352) 264-6843; Fax: (352) 264-6852

Title	Name	Phone	E-mail
Contract Mgr/Supvr	Ted Goodman	(352) 264-6843	tgoodman@alachuacounty.us
Inspector	Richard Harrington	(352) 278-7719	rharrington@alachuacounty.us
Inspector	Mike Keim	(352) 213-4986	mkeim@alachuacounty.us
Inspector	Robert Zimmerman	(352) 359-3523	rzimmerman@alachuacounty.us
Inspector	Tim Ramsey	(352) 213-0691	thr@alachuacounty.us

Taylor County - Alachua County Environmental Protection Department
408 West University Avenue, Suite 106, Gainesville, FL 32601
Main Phone: (352) 264-6843; Fax: (352) 264-6852

Title	Name	Phone	E-mail
Contract Mgr/Supvr	Ted Goodman	(352) 264-6843	tgoodman@alachuacounty.us
Inspector	Richard Harrington	(352) 278-7719	rharrington@alachuacounty.us
Inspector	Mike Keim	(352) 213-4986	mkeim@alachuacounty.us
Inspector	Robert Zimmerman	(352) 359-3523	rzimmerman@alachuacounty.us
Inspector	Tim Ramsey	(352) 213-0691	thr@alachuacounty.us

Union County - Alachua County Environmental Protection Department
408 West University Avenue, Suite 106, Gainesville, FL 32601
Main Phone: (352) 264-6843; Fax: (352) 264-6852

Title	Name	Phone	E-mail
Contract Mgr/Supvr	Ted Goodman	(352) 264-6843	tgoodman@alachuacounty.us
Inspector	Richard Harrington	(352) 278-7719	rharrington@alachuacounty.us
Inspector	Mike Keim	(352) 213-4986	mkeim@alachuacounty.us
Inspector	Robert Zimmerman	(352) 359-3523	rzimmerman@alachuacounty.us
Inspector	Tim Ramsey	(352) 213-0691	thr@alachuacounty.us

Volusia County – Orange County Environmental Protection
3165 McCrory Place, Ste. 200, Orlando, FL 32803
Main Phone: (407) 836-1400; Fax: (407) 836-1499

Title	Name	Phone	E-mail
Contract Manager	David Jones	(407) 836-1405	David.Jones2@ocfl.net
Supervisor	Ruth Rauenzahn	(407) 836-1475	ruth.rauenzahn@ocfl.net
Inspector	Glen Becker	(407) 836-1453	glen.becker@ocfl.net
Inspector	Jackie Perry	(321) 239-4050	Jacqueline.perry@ocfl.net

Wakulla County – Leon County Growth & Environment
435 N. Macomb Street, Renaissance Center, Tallahassee, FL 32301
Main Phone: (850) 606-1300; Fax: (850) 606-1301

Title	Name	Phone	E-mail
Contract Manager	Robert Bass	(850) 606-1300 ext. 1314	bassR@leoncountyfl.gov
Supervisor	Edwin (Chris) French	(850) 606-1300 ext. 1329	frenche@leoncountyfl.gov
Inspector	Dennis Hatcher	(850) 606-1300 ext. 1337	hatcherj@leoncountyfl.gov

Walton County - Florida Department of Health in Escambia County
1300 West Gregory Street, Pensacola, FL 32502
Main Phone: (850) 595-6707; Fax: (850) 595-6774

Title	Name	Phone	E-mail
Contract Mgr/Supvr	Gregory Berrian	(850) 595-6700 ext. 2040	Gregory.Berrian@flhealth.gov
Inspector	Muhammad (Rafiq) Khan	(850) 258-8546	Muhammad.Khan@flhealth.gov
Inspector	Regiene Pangahas	(850) 595-6700 ext. 2007	Regiene.Pangahas@flhealth.gov
Inspector			
Office Contact	Monica Wilson	(850) 595-6700 ext. 2004	Monica.Wilson@flhealth.gov

Washington County – Florida Department of Health in Escambia County
1300 West Gregory Street, Pensacola, FL 32502
Main Phone: (850) 595-6707; Fax: (850) 595-6774

Title	Name	Phone	E-mail
Contract Mgr/Supvr	Gregory Berrian	(850) 595-6700 ext. 2040	Gregory.Berrian@flhealth.gov
Inspector	Muhammad (Rafiq) Khan	(850) 258-8546	Muhammad.Khan@flhealth.gov
Inspector	Regiene Pangahas	(850) 595-7600 ext. 2007	Regiene.Pangahas@flhealth.gov
Office Contact	Monica Wilson	(850) 595-6700 ext. 2004	Monica.Wilson@flhealth.gov

IMPORTANT NOTICE TO CONTRACTORS

IT IS THE RESPONSIBILITY OF THE CONTRACTOR TO NOTIFY THE APPROPRIATE STATE, AND/OR LOCAL REGULATORY AGENCIES PRIOR TO DELIVERY OF FUEL STORAGE TANKS WITH A CAPACITY OF OVER 550 GALLONS.

FAILURE TO DO SO MAY RESULT IN FINES.

FOR SPECIFIC REQUIREMENTS, PLEASE CHECK WITH THE STATE, AND/OR LOCAL DEPARTMENT OF ENVIRONMENTAL PROTECTION.

FURTHER INFORMATION MAY BE OBTAINED FROM:

STATE OF FLORIDA
DEPARTMENT OF ENVIRONMENTAL PROTECTION
WASTE MANAGEMENT
http://www.dep.state.fl.us/waste/categories/tanks

THIS INFORMATION IS SUPPLIED BY RING POWER CORPORATION AS A COURTESY ONLY.
IT IS NOT THE RESPONSIBILITY OF RING POWER, NOR DOES RING POWER HAVE THE AUTHORITY TO NOTIFY THE GOVERNING AUTHORITIES OF DELIVERY.

IMPORTANT NOTICE TO OWNERS

IT IS THE RESPONSIBILITY OF THE OWNER TO REGISTER THE FUEL STORAGE TANK WITH THE STATE OF FLORIDA, DEPARTMENT OF ENVIRONMENTAL PROTECTION, PER CHAPTER 376.303 OF THE FLORIDA STATUTES.

IT IS ALSO THE RESPONSIBILITY OF THE OWNER TO KEEP INFORMED OF ANY CHANGES IN RULES, REGULATIONS, OR UPGRADES REQUIRED AT FUTURE DATES. NO NOTIFICATION WILL BE GIVEN BY THE STATE OF FLORIDA OR ANY REGULATING AGENCY. THE FUEL STORAGE TANK HAS BEEN MANUFACTURED TO MEET ALL STATE AND LOCAL CODES AT THE TIME OF DELIVERY.

FOR MORE INFORMATION YOU MAY CONTACT:

STATE OF FLORIDA
DEPARTMENT OF ENVIRONMENTAL PROTECTION
WASTE MANAGEMENT
http://www.dep.state.fl.us/waste/categories/tanks

THIS INFORMATION IS SUPPLIED BY RING POWER CORPORATION AS A COURTESY ONLY.
IT IS NOT THE RESPONSIBILITY OF RING POWER, NOR DOES RING POWER HAVE THE AUTHORITY TO REGISTER FUEL STORAGE TANKS.

5

TRANSFER SWITCH

Powering Business Worldwide

City of Tampa Storm Water
Lake Eckles
Ring Power - PO# 251550E002

Submittal for Approval

General Order

STA1483689

Volume 1 of 1

Equipment:

Automatic Transfer Switch
100/3 Nema 4X Service Entrance rated
w/ LSI Digital Trip

Date: 1/19/2026

©2025 Eaton Corporation, All Rights Reserved

Detail Bill of Material

Project Name:	Ring Power City of Tampa Storm Water - Lake Eckles - PO# 251550E002	**Negotiation No:**	TAP50106X6K5
General Order No:	STA1483689	**Alternate No:**	0000

Item No.	Qty	Product	Description
001	1	Transfer Switches	Molded Case Breaker/Switch: 100 Amps, NEMA Type-4X (316 Stainless Steel), Fixed Mounted, Service Entrance Rated

System Information: 480/277 Vac, 60hz, 3 Phase, 4 Wire, 3 poles
Transition Mode: Open Transition, Automatic Control w/900 Series Controller
Withstand and Close-On Rating: 100kA

Standard Features: 1b, 1c, 1d, 2a, 3b, 3c, 3d, 4b, 5h, 5j, 5k, 5l, 5m, 6b, 7a, 8e, 10b, 10d, 11a, 11b, 12c, 12d, 12g, 12h, 14c, 14d, 15e, 15f, 22, 23m, 26h, 26j, 26k, 26l, 26m, 32a, 48f, 48u, 49c,
Optional Features: 12l, 12m, 16b, 18jl, 37a, 38b, 41a, 51f1, 61f, 80d1,
---
Source 1 Terminals: (1) #14-1/0 CU/AL
Source 2 Terminals: (1) #14-1/0 CU/AL
Load Side Terminals: (1) #6-300 CU/AL
Neutral Terminals: (3) #14-1/0 CU/AL

Estimated Freight Charge: $92 each, from El Paso, TX to FL

Catalog No ADN9P2B30100XEA
Designation LAKE ECKELS- 100A SE ATS

Qty	List of Materials
1	ADN9P2 3 Poles 100 Amps - UL1008
1	Enclosure - Type-4X (316 Stainless Steel)
1	1b. Time Delay Normal to Emergency Adj. 0-9999 sec
1	1c. Time Delay Normal Disconnect Adjustable 0-10 Sec
1	1d. Time Delay Normal Reconnect Adjustable 0-60 Sec
1	2a. Time Delay Engine Start Adj. 0-120 sec
1	3b. Time Delay Emergency to Normal Adj. 0-9999 sec
1	3c. Time Delay Emergency Disconnect Adjustable 0-10 Sec
1	3d. Time Delay Emergency Reconnect Adjustable 0-60 Sec
1	4b. Time Delay Engine Cool-off Adj. 0-9999 sec
1	5h. Emergency (S2) Sensing Phase Reversal
1	5j. Emergency (S2) Sensing Under Voltage/Under Freq
1	5k. Emergency (S2) Sensing Over Voltage/Over Freq
1	5l. Emergency (S2) Sensing Voltage Unbalance
1	5m. Emergency (S2) Sensing Phase Loss
1	6b. Test Pushbutton
1	7a. Time Delay Engine Fail Adj. 0-6 sec
1	8e. Bypass All Timers
1	10b. Source Selector - Utility to Utility or Utility to Gen
1	10d. Source Selector - Generator to Generator
1	11a. ATS Health
1	11b. Maintenance Watch
1	12c. LED Indicator Normal Position
1	12d. LED Indicator Emergency Position
1	12g. LED Indicator Normal Source Available
1	12h. LED Indicator Emergency Source Available
1	12l. Source 1 PXR20 LSI 100 Amps
1	12m. Source 2 Trip 100 Amps
1	14c/d. Source Available (4 Form C)
1	15e/f. Source Position Indication (1 Form C Micro Switch Outputs)

For assistance contact: Peter Smith-Johannsen Mobile: +1(561)801-3654 Email: sales@atlpwr.com

Detail Bill of Material

Project Name:	Ring Power City of Tampa Storm Water - Lake Eckles - PO# 251550E002	**Negotiation No:**	TAP50106X6K5
General Order No:	STA1483689	**Alternate No:**	0000

Qty	List of Materials
1	16b. Power Switch Overcurrent Protection Both Source 1 & Source 2
1	18jl. ATC-900 Integrated Metering, on Load [CTs are shipped unmounted]
1	22. Ground Bar
1	23m. Auto Plant Exerciser Selectable-Disabled/Daily/Calendar Dates, 0-600 min, Load/No Load w/Fail Safe
1	26h. Normal (S1) Sensing Phase Reversal
1	26j. Normal (S1) Sensing Under-voltage/Under-frequency
1	26k. Normal (S1) Sensing Over-voltage/Over-frequency
1	26l. Normal (S1) Sensing Voltage Unbalance
1	26m. Normal (S1) Sensing Phase Loss
1	32a. Time Delayed Transition (adjustable - min:sec)
1	37a. Rated as Suitable for Service Entrance w/o Ground Fault
1	38b. STAINLESS STEEL Cover for Controller
1	41a. 100 Watt Space Heater with Thermostat
1	48f. MODBUS Communication
1	48u. USB Port for Memory Stick
1	49c. Multi-Tap Transformer
1	51f1. 100KA CVX Surge Device on Source 1
1	61f. Power Loss Buffer ATC Comm (includes DCT module)
1	80d1. Fireman's Kill Switch Terminal Blocks

Eaton Selling Policy 25-000 applies.

If Eaton and the buyer entity listed on this purchase order have a separate executed written agreement for the products/services herein, then that agreement applies. Otherwise, Eaton's Selling Policy 25000 (https://www.eaton.com/ca/en-gb/support/terms-conditions.html) controls and supersedes all prior correspondence or communications between Eaton and the buyer, and any additional or different terms proposed by the buyer are rejected.

All orders must be released for manufacture within 90 days of date of order entry. If approval drawings are required, drawings must be returned approved for release within 60 days of mailing. If drawings are not returned accordingly, and/or if shipment is delayed for any reason, the price of the order will increase by 1.0% per month or fraction thereof for the time the shipment is delayed.

Seller shall not be responsible for any failure to perform, or delay in performance of, its obligations resulting from the COVID-19 pandemic or any future epidemic, and Buyer shall not be entitled to any damages resulting thereof.

For assistance contact: Peter Smith-Johannsen Mobile: +1(561)801-3654 Email: sales@atlpwr.com

General Information: Transfer Switches

Molded Case Breaker/Switch	100 Amps, NEMA Type-4X (316 Stainless Steel), Fixed Mounted, Service Entrance Rated
System Information	480/277 Vac, 60hz, 3 Phase, 4 Wire, 3 poles
Transition Mode	Open Transition, Automatic Control w/900 Series Controller
Withstand and Close-On Rating	100kA

Standard Features	1b, 1c, 1d, 2a, 3b, 3c, 3d, 4b, 5h, 5j, 5k, 5l, 5m, 6b, 7a, 8e, 10b, 10d, 11a, 11b, 12c, 12d, 12g, 12h, 14c, 14d, 15e, 15f, 22, 23m, 26h, 26j, 26k, 26l, 26m, 32a, 48f, 48u, 49c,
Optional Features	12l, 12m, 16b, 18jl, 37a, 38b, 41a, 51f1, 61f, 80d1,
---	
Source 1 Terminals	(1) #14-1/0 CU/AL
Source 2 Terminals	(1) #14-1/0 CU/AL
Load Side Terminals	(1) #6-300 CU/AL
Neutral Terminals	(3) #14-1/0 CU/AL

Estimated Freight Charge	$92 each, from El Paso, TX to FL

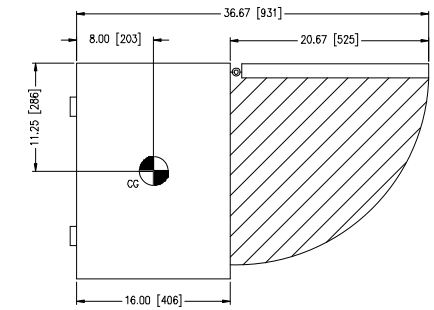

TOP VIEW

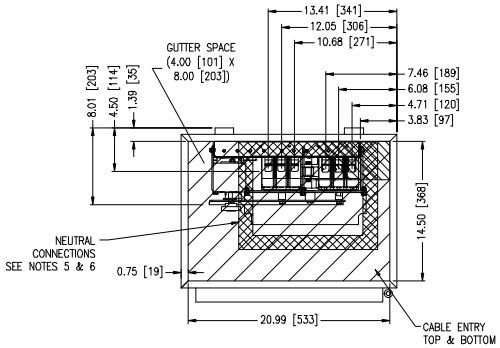

PLAN VIEW

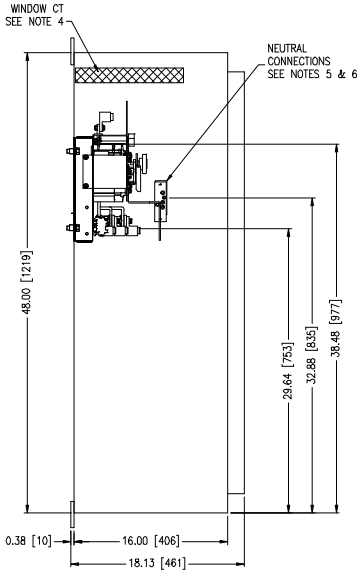

SIDE VIEW
(WITH LEFT SIDE REMOVED)

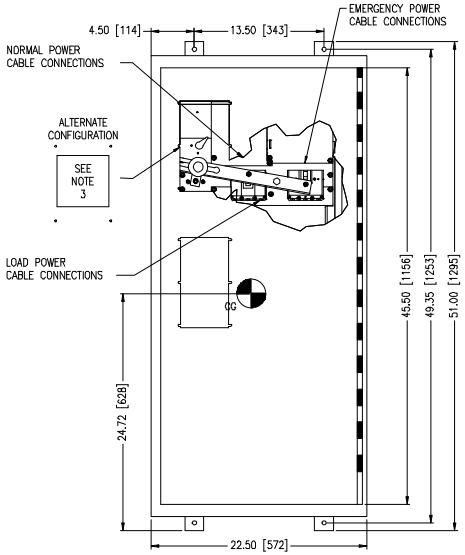

FRONT VIEW

ADN9P2B30100XEA

AUTOMATIC TRANSFER (FIXED) BREAKER SWITCH
ATC-900 CONTROL, P2 BREAKER
S1 (MCB) S2 (MCB) FIXED MOUNTED
480/277V 60HZ, 3 PHASE, 4 WIRE, 3 POLE, 100 AMPS
WITHSTAND: 100kA
TYPE-4X (316) ENCLOSURE, UL1008 LISTED

FEATURES INCLUDED:

1B	TIME DELAY NORMAL TO EMERGENCY ADJ 0-9999 sec
1C	TIME DELAY NORMAL DISCONNECT ADJ 0-10 sec
1D	TIME DELAY NORMAL RECONNECT ADJ 0-60 sec
2A	TIME DELAY ENGINE START ADJ 0-120 sec
3B	TIME DELAY EMERGENCY TO NORMAL ADJ 0-9999 sec
3C	TIME DELAY EMERGENCY DISCONNECT ADJ 0-10 sec
3D	TIME DELAY EMERGENCY RECONNECT ADJ 0-60 sec
4B	TIME DELAY ENGINE COOL-OFF ADJ 0-9999 sec
5H	EMERGENCY (S2) SENSING PHASE REVERSAL
5J	EMERGENCY (S2) SENSING ALL PHASE UNDERVOLTAGE/UNDER FREQ
5K	EMERGENCY (S2) SENSING ALL PHASE OVERVOLTAGE/OVER FREQ
5L	EMERGENCY (S2) SENSING ALL PHASE VOLTAGE UNBALANCE
5M	EMERGENCY (S2) SENSING PHASE LOSS
6B	ENGINE TEST PUSHBUTTON
7A	TIME DELAY ENGINE FAIL ADJ 0-6 sec
8E	BYPASS ALL TIMERS
10B	SOURCE SELECTOR-UTILITY TO UTILITY or UTILITY TO GENERATOR
10D	SOURCE SELECTOR-GENERATOR TO GENERATOR
11A	ATS HEALTH
11B	MAINTENANCE WATCH
12C	NORMAL (S1) CONNECTED INDICATION
12D	EMERGENCY (S2) CONNECTED INDICATION
12G	NORMAL (S1) AVAILABLE INDICATION
12H	EMERGENCY (S2) AVAILABLE INDICATION
12L	NORMAL (S1) TRIPPED INDICATION PXR20 LSI 100A
12M	EMERGENCY (S2) TRIPPED INDICATION TMTU 100A
14C	SOURCE AVAILABLE CONTACT NORMAL (S1) 4 FORM C
14D	SOURCE AVAILABLE CONTACT EMERGENCY (S2) 4 FORM C
15E	POSITION INDICATION CONTACT NORMAL (S1) 1 FORM C
15F	POSITION INDICATION CONTACT EMERGENCY (S2) 1 FORM C
16B	SOURCE 1 and SOURCE 2 OVERCURRENT PROTECTION
18JL	ATC-900 INTEGRATD METERING w/DCT MODULE ON LOAD
22	GROUND BAR
23M	PLANT EXERCISER DAILY/CALENDAR DATES, LOAD/NO LOAD 0-600 min
26H	NORMAL (S1) SENSING PHASE REVERSAL
26J	NORMAL (S1) SENSING ALL PHASE UNDERVOLTAGE/UNDER FREQ
26K	NORMAL (S1) SENSING ALL PHASE OVERVOLTAGE/OVER FREQ
26L	NORMAL (S1) SENSING ALL PHASE VOLTAGE UNBALANCE
26M	NORMAL (S1) SENSING PHASE LOSS
32A	TIME DELAYED (ADJUSTABLE-MIN:SEC)
37A	RATED AS SUITABLE FOR SERVICE ENTRANCE W/O GROUND FAULT
38B	STEEL COVER FOR CONTROLLER
41A	100 WATT SPACE HEATER w/THERMOSTAT
48F	COMMUNICATIONS MODBUS
48U	USB PORT
49C	MULTI-TAP VOLTAGE TRANSFORMER (480/277 Vac ONLY WIRED FOR USE)
51F1	100 kA CVX SURGE DEVICE ON SOURCE 1
61F	POWER LOSS BUFFER ATC COMM (INCLUDES DCT MODULE)
80D1	FIREMAN KILL SWITCH TERMINAL BLOCKS

REQUIRED FOR SEISMIC, RECOMMENDED FOR ALL APPLICATIONS:
USE 4, 1/2-13 UNC GRADE 5 OR BETTER HEX HEAD BOLTS AND WASHERS. THESE BOLTS ARE TO BE TORQUED TO 75 FT. LBS. (102 NM).

TERMINALS:
NORMAL: (1) #14-1/0 CU/AL PER POLE
EMERGENCY: (1) #14-1/0 CU/AL PER POLE
LOAD: (1) #6-300 CU/AL PER POLE
NEUTRAL: (3) #14-1/0 CU/AL

NOTES:
1 APPROXIMATE SHIPPING WEIGHT = 232 LBS [105 KG]
2 DIMENSIONS SHOWN IN INCHES [MILLIMETERS]
3 CONTROLS PROVIDED BASED ON CUSTOMER ORDER INFORMATION.
4 IF A GROUND FAULT SENSING SYSTEM WAS ORDERED, A WINDOW CT AND GFR RELAY ARE PROVIDED. INSTALLER TO ROUTE ALL LOAD PHASE AND NEUTRAL CONDUCTORS THROUGH WINDOW CT WITH 'H1' AND 'X1' MARKINGS FACING THE BUS TERMINALS
4 TRANSFORMER INCLUDED (FIXED VOLTAGE)
5 FOR SWITCHED NEUTRAL APPLICATIONS CONNECT TO TERMINALS FOR 3 PHASE 3 WIRE SYSTEMS NEUTRAL ASSEMBLY IS NOT PROVIDED.
6 NEUTRAL TO GROUND BOND REQUIRED FOR SERVICE ENTRANCE APPLICATIONS HARDWARE SHIPS LOOSE.

CG CENTER OF GRAVITY

DESIGNATION: LAKE ECKELS 100A SE ATS	DFTR: PETER SMITH-JOHANNSEN	DATE: 3/2026	THE INFORMATION ON THIS DOCUMENT WAS CREATED BY EATON CORPORATION. IT WAS DISCLOSED IN CONFIDENCE AND IS ONLY TO BE USED FOR THE PURPOSE IN WHICH IT WAS SUPPLIED. EATON
	APPD:	DATE:	TITLE: AUTOMATIC TRANSFER (FIXED) | BREAKER SWITCH 480V OT | 40-100 AMP | ATC-900 CONTROLLER
	PRODUCT CODE: AT	S.O.: W10083Z	TYPE: ADN9P2B30100XEA FIXED MOUNTED — OUTLINE
CAGE CODE: 88725	REVISION: 1		G.O.: STA1483689-001 — DWG: W10083Z-0001 — SHEET 1 OF 4

COEFtBL_R7

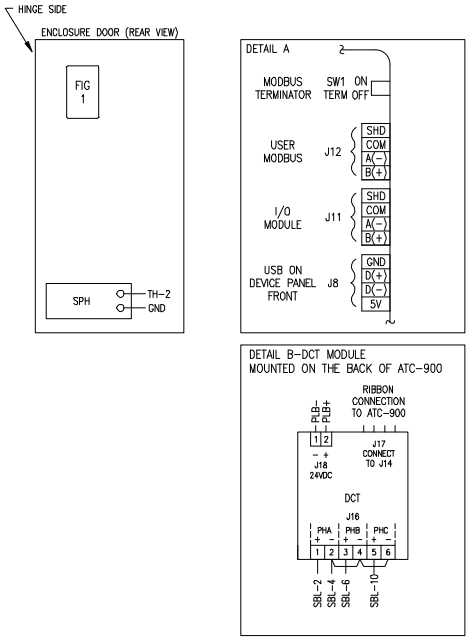

**REFER TO ENCLOSURE DOOR REAR VIEW FOR DEVICE PLACEMENT

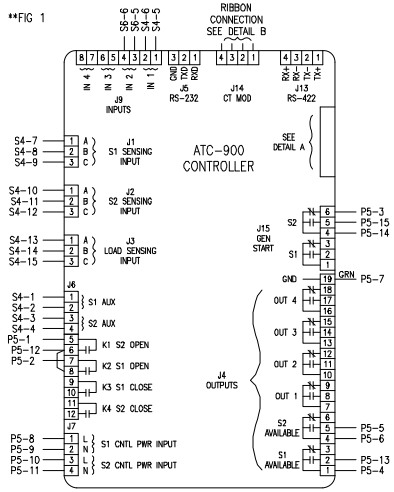

ATC-900 CONTROLLER				69D8391H01
PROGRAMMABLE INPUTS		CUSTOMER DESIGNATED INPUT ASSIGNMENT		DATE
		SIGNAL	NAME	
IN-1	J9-1		LOCKOUT	1/19/2026
	J9-2			
IN-2	J9-3		GO TO NEUTRAL	1/19/2026
	J9-4			
IN-3	J9-5			
	J9-6			
IN-4	J9-7			
	J9-8			

ATC-900 CONTROLLER				69D8391H02
PROGRAMMABLE OUTPUTS		CUSTOMER DESIGNATED OUTPUT ASSIGNMENT		DATE
		SIGNAL	NAME	
OUT-1	J4-7			
	J4-8			
	J4-9			
OUT-2	J4-10			
	J4-11			
	J4-12			
OUT-3	J4-13			
	J4-14			
	J4-15			
OUT-4	J4-16			
	J4-17			
	J4-18			

DESIGNATION: LAKE ECKELS 100A SE ATS	CAGE CODE: 88725	DFTR: PETER SMITH-JOHANNSEN	DATE: 1/19/2026
		APPD	DATE
		PRODUCT CODE: AT	S.O.: W10083Z
		REVISION: 1	

THE INFORMATION ON THIS DOCUMENT WAS CREATED BY EATON CORPORATION. IT WAS DISCLOSED IN CONFIDENCE AND IS ONLY TO BE USED FOR THE PURPOSE IN WHICH IT WAS SUPPLIED.

TITLE: AUTOMATIC TRANSFER (FIXED) | BREAKER SWITCH 480V OT | 40-100 AMP | ATC-900 CONTROLLER

TYPE: ADN9P2B30100XEA FIXED MOUNTED — DIAGRAM

G.O.: STA1483689-001 — DWG: W10083Z-W002 — SHEET 4 OF 4

COEFtBL_R7

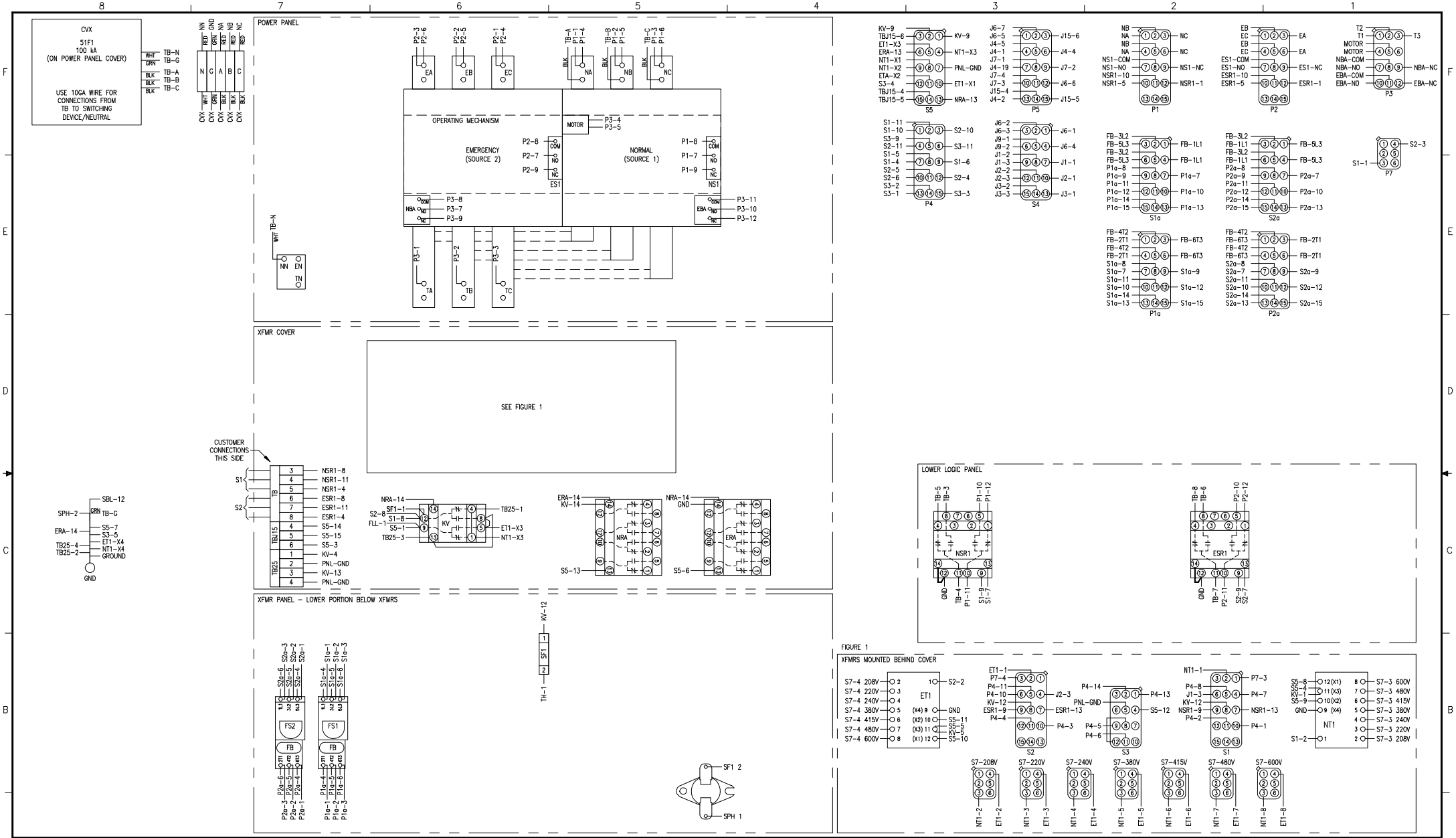

DFTR PETER SMITH-JOHANNSEN	DATE 09/2026	THE INFORMATION ON THIS DOCUMENT WAS CREATED BY EATON CORPORATION. IT WAS DISCLOSED IN CONFIDENCE AND IS ONLY TO BE USED FOR THE PURPOSE IN WHICH IT WAS SUPPLIED.	EATON
APPD	DATE	TITLE AUTOMATIC TRANSFER (FIXED) | BREAKER SWITCH 480V OT | 40–100 AMP | ATC-900 CONTROLLER	
PRODUCT CODE AT	S.O. W10083Z	TYPE ADN9P2B30100XEA FIXED MOUNTED	DIAGRAM
DESIGNATION LAKE ECKELS 100A SE ATS	REVISION 1	G.O. STA1483689-001	DWG W10083Z-W001
CAGE CODE 88725			SHEET 3 OF 4

COEFtBL_R7

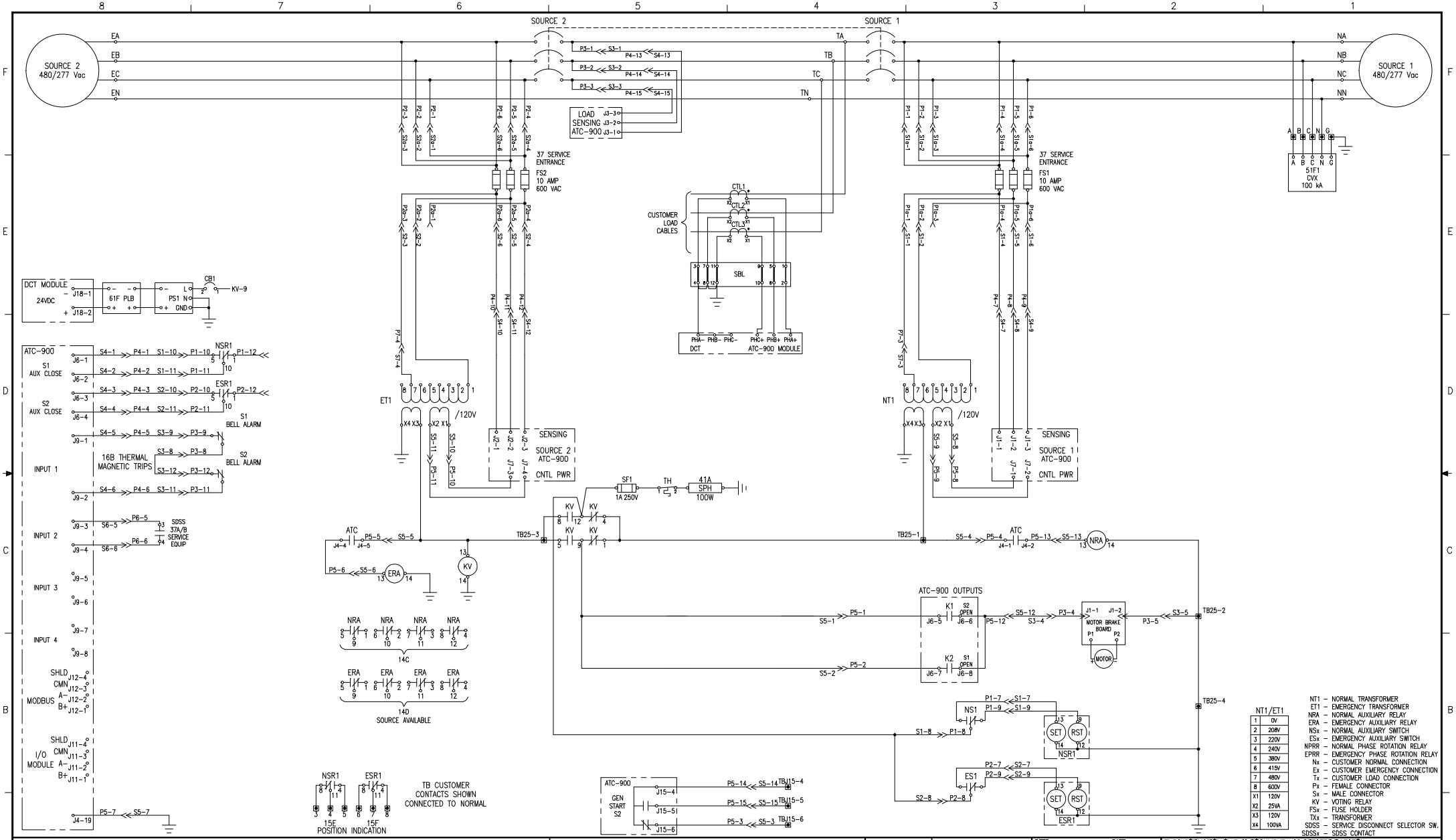

NT1/ET1	
1	0V
2	208V
3	220V
4	240V
5	380V
6	415V
7	480V
8	600V
X1	120V
X2	25VA
X3	120V
X4	100VA

NT1 – NORMAL TRANSFORMER
ET1 – EMERGENCY TRANSFORMER
NRA – NORMAL AUXILIARY RELAY
ERA – EMERGENCY AUXILIARY RELAY
NSx – NORMAL AUXILIARY SWITCH
ESx – EMERGENCY AUXILIARY SWITCH
NPRR – NORMAL PHASE ROTATION RELAY
EPRR – EMERGENCY PHASE ROTATION RELAY
Nx – CUSTOMER NORMAL CONNECTION
Ex – CUSTOMER EMERGENCY CONNECTION
Tx – CUSTOMER LOAD CONNECTION
Px – FEMALE CONNECTOR
Sx – MALE CONNECTOR
KV – VOTING RELAY
FSx – FUSE HOLDER
TXx – TRANSFORMER
SDSS – SERVICE DISCONNECT SELECTOR SW.
SDSSx – SDSS CONTACT

DFTR PETER SMITH–JOHANNSEN	DATE 09/2026	THE INFORMATION ON THIS DOCUMENT WAS CREATED BY EATON CORPORATION. IT WAS DISCLOSED IN CONFIDENCE AND IS ONLY TO BE USED FOR THE PURPOSE IN WHICH IT WAS SUPPLIED.	EATON
APPD	DATE	TITLE AUTOMATIC TRANSFER (FIXED) | BREAKER SWITCH 480V OT | 40–100 AMP | ATC–900 CONTROLLER	
PRODUCT CODE AT	S.O. W10083Z	TYPE ADN9P2B30100XEA FIXED MOUNTED	SCHEMATIC
DESIGNATION LAKE ECKELS 100A SE ATS	CAGE CODE 88725	REVISION 1	G.O. STA1483689-001
DWG W10083Z-S001	SHEET 2 OF 4		

COEFtBL_R7

Reliability, versatility and performance

Service entrance rated transfer switch with Cam-Lok terminals

Eaton offers a comprehensive portfolio of UL® 1008 Listed transfer switch solutions to meet a wide variety of standby power applications. The molded case transfer switch line is not only reliable and simple to operate, but also available in a broad selection of product configurations. When coupled with our extensive custom engineering capabilities, finding the right transfer switch for your project has never been easier. Whether your needs are standard commercial or harsh industrial, the robust construction and performance of an Eaton transfer switch sets the standard for maintaining power to critical loads and optimizing system uptime.

Product configurations

- Open transition (time delayed, load voltage decay)
- Automatic, non-automatic, manual operation
- 40 to 1000 amperes
- Two-, three- and four-pole
- Up to 600 Vac, 50/60 Hz
- Single-phase or three-phase
- Cam-Lok™ quick-connect terminals
- Service entrance—UL 1008 Listed and 100% rated
- Overcurrent protection with Power Xpert Release (PXR) thermal-magnetic or electronic trip unit
- NEMA® 1, 12, 3R, 4X enclosure or open frame design
- Automatic transfer controller: ATC-900, ATC-300+, ATC-100

Codes and standards

- UL 1008 Listed
- CSA® C22.2 No. 178 Certified
- Seismic qualified—OSHPD, CBC, IBC, UBC Zone 4
- NFPA® 110 and National Electrical Code® (NEC®) Articles 700, 701, 702, 708

Features and benefits

- Power Defense™ (PD) molded case switch/circuit breaker pair with self-protecting main contacts
- Ability to field replace molded case switch/circuit breaker individually
- Mechanically interlocked to prevent simultaneous connection of both sources
- Quick-connect, multi-tap transformer panel derives control power from either source and permits field selection of system voltage
- Front accessible
- Top/bottom cable entry
- Internal dead-front cover
- Industry standard serial communication (Modbus® RTU)
- Auxiliary contacts indicate position of main contacts
- Dual automatic plant exercisers for scheduling unloaded and loaded engine-generator testing
- Programmable control inputs and relay outputs for load management
- Advanced source sensing incorporates negative sequence voltage detection for identifying phase loss condition
- USB port for downloading power quality data, managing setpoint profiles and updating firmware

Options and accessories

- ATC-900 controller accessory modules:
  - DCT—integral power metering (load) and 24 Vdc external supply power
  - I/O—expand programmable control inputs (up to 20) and Form C relay outputs (up to 20)
- Advanced power quality metering (PXM series) of source or load
- Surge protection device (UL 1449 5th edition)
- 7-inch color touch screen HMI remote annunciator to monitor and control single or multiple (up to eight) transfer switches
- Ethernet communication (Modbus TCP/IP, BACnet, EtherNet/IP)
- Thermostat controlled heater element for outdoor applications
- Compression lug terminals
- Non-automatic operator controls and indication lights

Powering Business Worldwide

Product selection

Catalog numbering system

ADN9P2B30100XEA

AD M 3 P3 A 3 0400 X R L

Operation and transition type
- **AD** = Automatic, open delayed transition
- **ND** = Non-automatic, open delayed transition
- **MT** = Manual, open transition

Product type
- **M** = Molded case
- **N** = Molded case (service entrance)

Control logic
- **1** = ATC-100 ❶
- **3** = ATC-300+
- **9** = ATC-900
- **E** = Electromechanical
- **X** = None

Frame
- **P2** = Power Defense 2
- **P3** = Power Defense 3
- **P4** = Power Defense 4
- **P5** = Power Defense 5

Mounting
- **A** = Fixed (switch/switch)
- **B** = Fixed (breaker/breaker)
- **C** = Fixed (breaker/switch)
- **D** = Fixed (switch/breaker)

Number of poles
- **2** = Two-pole
- **3** = Three-pole
- **4** = Four-pole

Amperes
- **0040** = 40
- **0070** = 70
- **0100** = 100
- **0150** = 150
- **0200** = 200
- **0225** = 225
- **0300** = 300
- **0400** = 400
- **0600** = 600
- **0800** = 800
- **1000** = 1000

Voltage
- **A** = 120 V, 60 Hz
- **B** = 208 V, 60 Hz
- **E** = 600 V, 60 Hz
- **G** = 220 V, 50 Hz
- **H** = 380 V, 50 Hz
- **O** = 415 V, 50 Hz
- **W** = 240 V, 60 Hz
- **X** = 480 V, 60 Hz

Enclosure type
- **K** = Open frame
- **S** = NEMA 1
- **R** = NEMA 3R
- **J** = NEMA 12
- **D** = NEMA 4X, 304 stainless steel
- **E** = NEMA 4X, 316 stainless steel

Configuration code
- **A** = Standard
- **L** = Cam-Lok termination

❶ Limited to 600 A and below.

Standard and optional ATC controller features

Description	Automatic controller		
	ATC-100	ATC-300+	ATC-900
Basic transfer control, plant exerciser, time delays, self diagnostics and system settings	Standard	Standard	Standard
Source mimic diagram with LED indication	Standard	Standard	Standard
Engine test and start contact	Standard	Standard	Standard
Dual source control power input	Standard	Standard	Standard
Liquid crystal display (LCD)	—	Standard	Standard
Programmable setpoints and plant exerciser	—	Standard	Standard
Password protection	—	Standard	Standard
Time-stamped history and event log	—	Standard	Standard
Time delay bypass	—	Standard	Standard
Go to Source 2 control input	—	Standard	Standard
Pre-transfer and general alarm control outputs	—	Standard	Standard
Lockout and monitor modes	—	Standard	Standard
Source status output relay contacts	—	Standard	Standard
Serial communication port (Modbus RTU)	—	Standard	Standard
Manual retransfer control input	—	Optional	Standard
Source 2 inhibit / load shed input	—	Optional	Standard
USB port—metering data, setpoint and firmware management	—	—	Standard
Preferred source selection	—	—	Standard
Dual generator capability	—	—	Standard
User-configurable inputs/outputs	—	—	Standard
Advanced diagnostics and troubleshooting with pre-/post-event data capture	—	—	Standard
ATS Health and Maintenance Watch™	—	—	Standard
Integrated load metering	—	—	Optional
Load management with selective load shed	—	—	Optional
DC voltage control power input	—	—	Optional
Three source ATS—primary/secondary control	—	—	Optional
Ethernet communication ❶	—	Optional	Optional

❶ Ethernet communication option requires use of serial port.

Quick-connect Cam-Lok termination

Transfer switches can be configured with a Cam-Lok power panel for quick connection to a temporary emergency power source (engine-generator).

The color-coded power panel resides in an isolated compartment and is constructed of industry-standard 16 series Cam-Lok receptacles (male) mounted on a high-strength fiberglass-reinforced polyester material. Each Cam-Lok receptacle is rated for 400 A and can be equipped with an optional hinged cover. Ground ampacity can be specified as 25%, 50% or 100% of the transfer switch ampere rating.

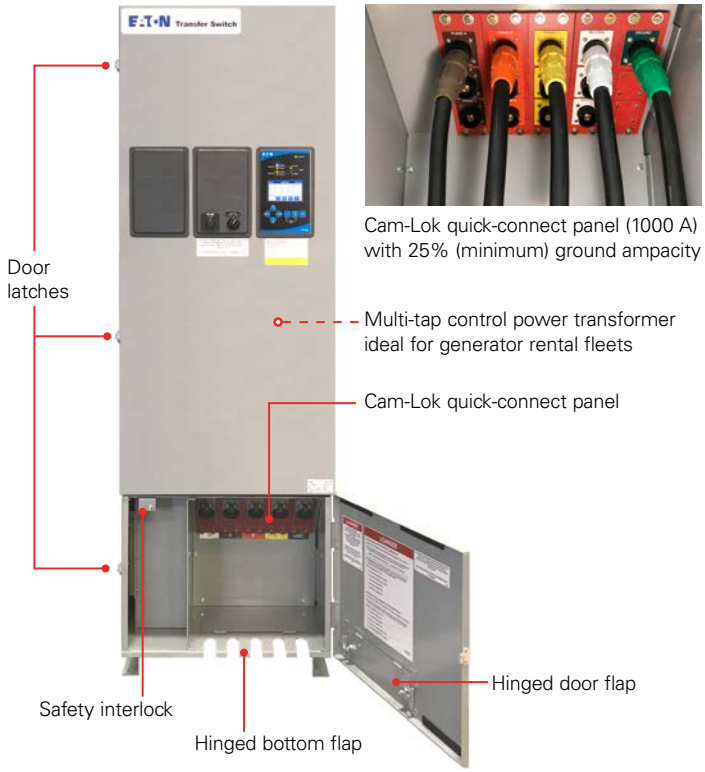

Cam-Lok quick-connect panel (1000 A) with 25% (minimum) ground ampacity

Eaton
1000 Eaton Boulevard
Cleveland, OH 44122
United States
Eaton.com

Powering Business Worldwide

© 2023 Eaton
All Rights Reserved
Printed in USA
Publication No. PA140016EN / Z28189
November 2023

Eaton is a registered trademark.

All other trademarks are property of their respective owners.

Follow us on social media to get the latest product and support information.

Easy-to-operate ATS controller with advanced diagnostic capabilities

The Eaton ATC-900 controller brings ease of use, adaptability, supervisory and programming capabilities to automatic transfer switch (ATS) equipment. Extreme reliability makes this controller ideal for mission-critical applications in healthcare, wastewater, data center and other industrial and commercial applications. The ATC-900 controller is compatible with Eaton's complete transfer switch product offering including contactor, molded case and power frame type transfer switches.

Ease of use

- Color display for system status, metering data, programming, diagnostics, help and troubleshooting
- Simple arrow keys are used for quick screen navigation
- LED mimic bus with source available and source connected indication
- Easy-to-interpret function descriptions without use codes
- Data screens are grouped for ease of viewing and secure edits
- Engine test, help, lamp test, enter and bypass timer pushbuttons
- PC-based setpoint editor tool (EASE)—create, edit and save setpoint configuration files
- USB port for upload/download of metering data, event details, setpoint configuration files and firmware updates

Advanced diagnostics

- Time/date stamped event summaries and details including historical metering values
- High-speed event waveform capture of voltage, frequency and current
- Export event log (csv file) with metering data to USB drive for post-event analysis
- Integral load-side metering module (optional) provides real-time display of power, electrical current and power factor

Monitoring and control

- Selective kilowatt load shed (optional module)
- Remote load testing
- Primary and secondary control functionality for three-source applications such as utility-generator-generator
- Industry standard communication—serial (RS-485/Modbus® RTU) and Ethernet (optional module)
- Remote management of a single or multiple ATC-900 with HMi Remote Annunciator Controller

Flexibility

- Open (time delay, in-phase monitor) or closed transition control
- For use in low-voltage (up to 600 Vac) and medium-voltage systems (up to 46 kVac)
- Up to 20 field-programmable control inputs and relay outputs

Smart functionality

- ATS Health reports equipment endurance, electrical excursions, performance and component health, allowing service personnel to make informed maintenance decisions and manage risk
- Maintenance Watch™ issues automated notifications and task guidance to perform scheduled inspection and maintenance based on NFPA® 110—standard for emergency and standby power systems

EATON
Powering Business Worldwide

Features	Description
System application	Three-phase or single-phase Low-voltage: up to 600 Vac Medium-voltage: up to 46 kVac (external PT required) Frequency: 50 or 60 Hz
Supply power	120 Vac (65–160 Vac, 50/60 Hz) or 24 Vdc (±20%) Power consumption (maximum): 20 VA
System arrangement	Utility-generator, dual-utility, dual-generator, three-source
Transition	Closed and open (time delay, in-phase monitor, load voltage decay)
User interface	4.3-inch color display (TFT LCD, 480 x 272), LED mimic bus (source available, source connected, preferred source), pushbutton control (navigation, enter, help, engine test, bypass timer, lamp test), UV-resistant faceplate
Metering	
Voltage	Sensing: Source 1, Source 2, Load Measurement: Vab, Vbc, Vca (line-line), Vag, Vbg, Vcg (phase) Range: up to 720 Vac rms Accuracy: ±1%
Frequency	Sensing: Source 1, Source 2, Load Range: 40–80 Hz Accuracy: ±0.2 Hz
Current (optional)	Sensing: Load Measurement: Ia, Ib, Ic Range: 100–5000 A (CT ratio setpoint 100:5 to 5000:5) Accuracy: ±1%; burden: 0.0115 VA (per phase at 5 A) Current input: 0–5 A (CTs not included), wire range 6–22 AWG
Power (optional)	Sensing: Load Measurement: kW, kvar, kVA, power factor (PF) Accuracy: ±2 %
Sampling	64 samples per cycle (frequency measured every cycle; voltage, current and power measured every third cycle)
Voltage and current unbalance	Symmetrical component (positive and negative sequence) calculation detects abnormal conditions including phase loss
Phase rotation	Three-phase sequence check
Serial port	USB 2.0 (download: setpoints, events, statistics, metering data; upload: setpoints, firmware)
Network communication	
Serial	Modbus RTU
Ethernet (optional)	ATS-ECAM (Modbus TCP/IP, SNTP) CAENET (ICMP, IP, TCP, UDP, DHCP, HTTP, Modbus TCP, EtherNet/IP) PXG-900 (Modbus TCP/IP, BACnet/IP, SMTP, DHCP, HTTP)
Inputs (fixed)	Source 1 auxiliary, Source 2 auxiliary (wetted, 24 Vdc at 6 mA)
Inputs (field programmable)	Four inputs standard. Expandable up to 20 (wetted, 24 Vdc at 6 mA): • Disabled • Monitor mode (NO/NC) • Bypass timer • Lockout • Manual retransfer enable • Manual retransfer request • Secondary control (3-source system) • Remote engine test • Preferred source select • Source 2 inhibit / load shed • Go to Source 2 • Go to neutral (load disconnect) • ATS bypassed • Safety interlock • Closed transfer disable • Remote I/O • Engine test mode select • Source 1 breaker health • Source 2 breaker health • Source 1 surge protection • Source 2 surge protection • Load surge protection

Features	Description
Outputs (fixed)	Source 1 available and Source 2 available (Form C, rated 10 A at 250 Vac/30 Vdc) Generator start 1 and Generator start 2 (Form C rated 5 A at 250 Vac/30 Vdc)
Outputs (field programmable)	• Disabled • Alarm • Source 1 Connected • Source 2 Connected • Pre-/Post-Transfer • Pre-Transfer • Post-Transfer • Engine 1 Start Contact Status • Engine 2 Start Contact Status • Selective Load Shed • Load Bank Control • Load Sequence • Emergency Inhibit On • ATS Not in Automatic • Cooldown in Progress • ATS in Test • Engine Test Aborted • Remote I/O • ATS in Bypass • Source 1 Available • Source 2 Available • Source 2 Request • ATC status • Waiting for Synchronization
Source availability	Indication and status determined by programmable input or programmable setpoints
Drop-outs and pick-ups	Source 1 and Source 2: undervoltage, overvoltage, underfrequency, overfrequency, voltage unbalance, phase loss Load: current unbalance
Time delays	Engine start, engine fail, engine cool-down, normal to emergency, emergency to normal, neutral, pre-transfer, post-transfer, voltage unbalance/phase loss, normal disconnect/reconnect, emergency disconnect/reconnect, source synchronization
Engine/plant exerciser	Two independent exercisers with engine run-time Test modes: run only, load transfer, external select, disabled Schedule: off, daily, 7-14-28 day, up to 12 specific calendar dates
Maintenance Watch	One major maintenance and four inspection dates, load test cadence, up to 21 date/time stamped task completions
ATS Health	• Main contact operations • Load overcurrent • Source overvoltage • Transfer switch under load • Switching device exercise • Main contact actuation • Surge protection device • Circuit breaker health
Historical counters	• Source 1 available time • Source 2 available time • Source 1 connected time • Source 2 connected time • Tier 4 timer • Load energized time • Number of transfers • Number of run-only tests • Number of transfer tests • Counter resets are time-stamped and logged as events
Event logging	Up to 100 time-stamped event summaries and 350 event details. Time-stamping resolution of 0.01 seconds.
Event recording (high-speed capture)	4 seconds of metered data (stored every 20 msec) for certain events. Data is captured 2 seconds before and 2 seconds after an event (except for power failure that stores 4 seconds before event). Oscillographic data for 10 events is stored and can be downloaded via USB or displayed graphically.
Time/date	Programmable; daylight savings and time zone offset
Setpoints	User programmable (local or remote)
Access control	Password protection (system setpoints and engine test)
Environmental	Storage temperature: –30 °C to +80 °C (–22 °F to 176 °F) Operating temperature: –20 °C to +70 °C (–4 °F to 158 °F) Relative humidity: up to 90% (noncondensing)
Emissions	FCC Part 15 (Subpart B, Class B); CISPR 11 (Class B)
Electromagnetic compatibility (EMC)	IEC 61000-4-2: electrostatic discharge immunity IEC 61000-4-3: radiated immunity IEC 61000-4-4: fast transient/burst immunity IEC 61000-4-5: surge immunity IEC 61000-4-6: conducted immunity IEC 61000-4-11: voltage dips/interruptions/variations
Standards	UL® 1008 recognized, UL 991

Eaton
1000 Eaton Boulevard
Cleveland, OH 44122
United States
Eaton.com

Powering Business Worldwide

© 2023 Eaton
All Rights Reserved
Printed in USA
Publication No. PA140003EN / Z27509
April 2023

Eaton is a registered trademark.

All other trademarks are property of their respective owners.

Follow us on social media to get the latest product and support information.

Power Defense molded case circuit breakers

Frame size 2 (15–225 A)

with PXR 20 digital trip unit

Frame configurator

Shown: PD2 3-pole with PXR 25 trip unit

Dimensions and weights

Approximate dimensions in inches (mm)

Number of poles	Width	Height	Depth
1	1.38 (35.1)	6.00 (152.4)	3.50 (88.9)
2	2.75 (69.9)	6.00 (152.4)	3.50 (88.9)
3	4.12 (104.6)	6.00 (152.4)	3.50 (88.9)
4	5.49 (139.5)	6.00 (152.4)	3.50 (88.9)

Approximate shipping weight in lb (kg)

Breaker type	1-Pole	2-Pole	3-Pole	4-Pole
PDG2 225 A	2.00 (0.91)	3.00 (1.36)	4.21 (1.82)	5.69 (2.46)

Trip unit ratings

Poles	Continuous current rating	Trip units
1-pole Thermal-magnetic	15, 20, 25, 30, 35, 40, 45, 50, 60, 70, 80, 90, 100, 110, 125, 150	TFF, VFF
2-, 3-, 4-pole Thermal-magnetic	15, 20, 25, 30, 35, 40, 45, 50, 60, 70, 80, 90, 100, 110, 125, 150, 175, 200, 225	TFF, VFF
3-, 4-pole Electronic	60, 100, 150, 225, adjustable range (15–225)	B2N, E##, D##, P## ❶

❶ All #s refer to protection and options. Refer to the MCCB catalog or Power Defense™ poster for more information. Direct links are below.

For additional information, visit the resources section available at **Eaton.com/PDmccb.**

Catalog number/product selection

Interrupting ratings (2-, 3- and 4-pole)

Catalog designator	F	G	K ❶	M ❶	N ❶	P ❶
UL/CSA	kA rms	kA rms	kA rms	kA rms	kA rms	kA rms
240 Vac	35	65	85	100	150	200
480 Vac	25	35	50	65	85	100
600 Vac	14	18	22	25	30/25 ❸	35/25 ❸
250 Vdc ❷	2	10	10	10	22	22 22

❶ UL current limiting for 3- and 4-pole breakers.

❷ DC ratings available in thermal-magnetic breakers only. 250 Vdc is achieved using two poles in series.

❸ First rating listed is for thermal-magnetic breakers, second rating is for breakers with PXR electronic trip units.

Terminals

Maximum breaker amperes	Breaker frame ❶	Terminal body type	Wire type	Wire class	Number of conductors per phase	AWG/kcmil range per conductor	Metric (mm²) range per conductor	3-pole catalog number
Standard terminals								
100	15–100	Steel	Cu/Al	B, C	1	14–1/0	2.08–53.5	**PDG2X3T100** ❷❸
225	60–225	Aluminum	Cu/Al	B, C	1	4–4/0	21.2–107	**PDG2X3TA225** ❹❸
Alternate terminals								
50	15–50	Aluminum	Cu/Al	B, C	1	14–4	2.08–21.2	**PDG2X3TA50** ❸
100	60–100	Aluminum	Cu/Al	B, C	1	14–1/0	2.08–53.5	**PDG2X3TA100** ❸
150	60–150	Aluminum	Cu/Al	B, C	1	14–4/0	2.08–107	**PDG2X3TA150** ❸
225	175–225	Aluminum	Cu/Al	B, C	1	6–300	13.3–152	**PDG2X3TA225K** ❹❺

❶ The "Breaker frame" column provides information on the ampere ratings for which the terminal may be used (field installation); in some cases the range is limited by proper fit of the terminal onto the breaker conductor. The column "Standard on Amperes" provides information on what terminal is used during factory configuration per Digit 14 of the breaker catalog number. The two may not match.

❷ Factory standard terminals and non-aluminum terminals for 100 A and below are the same terminals.

❸ No accessories included.

❹ PDF2 225 A breakers with Digit 14 designation of "J" are equipped with PDG2X3TA225K terminals. PDF2 150 A breakers with Digit 14 designation of "J" are equipped with PDG2X3TA225 terminals.

❺ Terminal shield included.

Trip units

Description	Specification
Trip unit	
Thermal-magnetic (**T**)	Fixed thermal-fixed magnetic
Molded case switch (**K**)	Fixed magnetic
Motor circuit protector (**M**)	Adjustable magnetic only (3-pole)
Electronic	
PXR 10 **(B)** adjustable LSI	LSI, MLSI
PXR 20 **(E)** current metering / comm opt.	LSI, LSIG
PXR 25 **(P)** power metering / comm std.	LSI, LSIG, MLSI, MLSIG

Powering Business Worldwide

Eaton
1000 Eaton Boulevard
Cleveland, OH 44122
United States
Eaton.com

© 2025 Eaton
All Rights Reserved
Printed in USA
Publication No. MZ012018EN / Z29832
June 2025

Eaton is a registered trademark.

All other trademarks are property of their respective owners.

Power Xpert Release (PXR) electronic trip units

MCCB PXR 25 trip unit

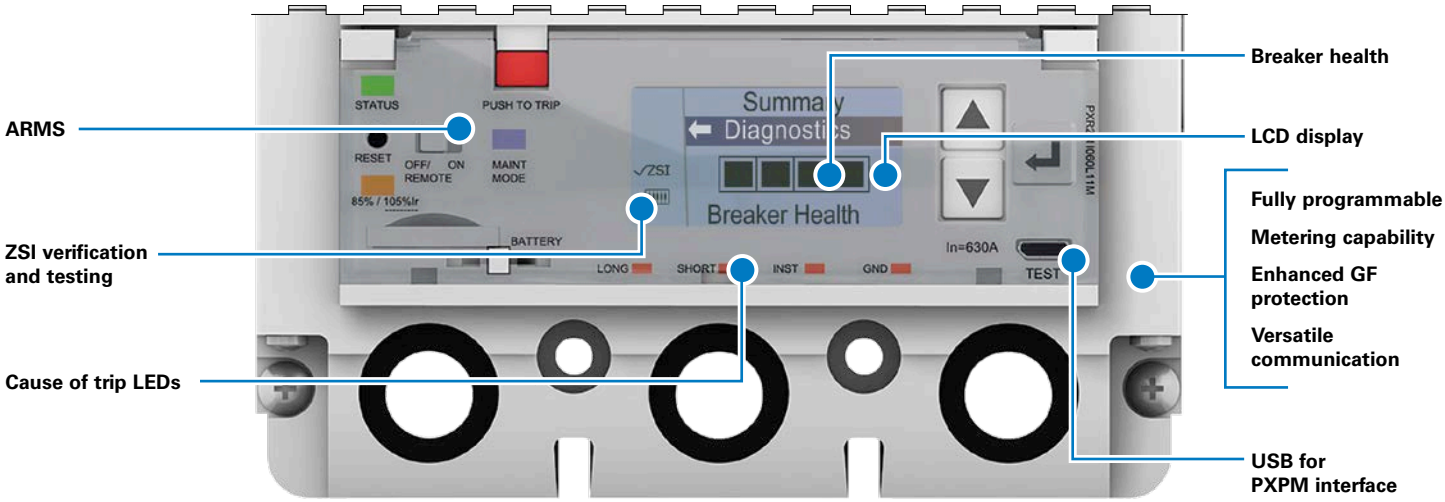

MCCB PXR 10

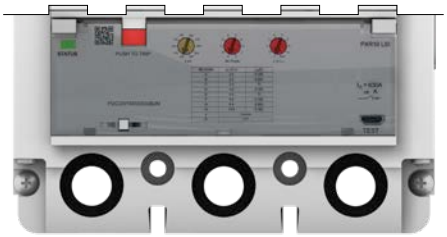

MCCB PXR 20

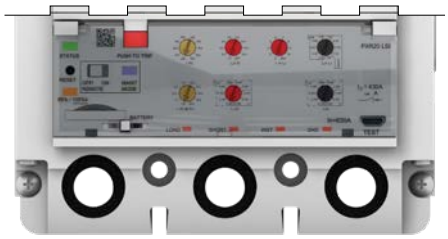

MCCB PXR 20D

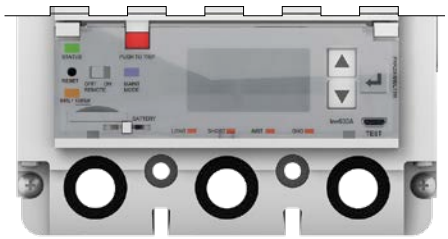

MCCB PXR features

Features	PXR 10	PXR 20	PXR 20D	PXR 25
Protection types	LSI	LSI/LSIG	LSI/LSIG	LSI/LSIG
Status indication	●	●	●	●
USB secondary injection testing	●	●	●	●
Programmable by USB port (PXPM)	●	●	●	●
Independent instantaneous adjustment	●	●	●	●
Adjustable L, S, I, G pickup and time		●	●	●
Cause of trip indication	▲	●	●	●
Load alarm indication with 2 levels		●	●	●
Programmable load alarm levels			●	●
Ground fault protection and alarm		○	○	○
Arcflash Reduction Maintenance System™ (ARMS) Available PD3, PD4, PD5, PD6 to meet NEC 240.87 requirements		○	○	○
Zone selective interlocking (ZSI) with indication		○	○	○
Programmable relays		○	●	●
Modbus RTU communication		○	●	●
CAM module communication		○	○	○
Rotatable LCD display			●	●
Breaker health and diagnostic monitoring		▲	●	●
Current metering accuracy		2.0%	0.5%	0.5%
Voltage metering accuracy				0.5%
Power and energy metering accuracy				1.0%

● Standard ○ Optional ▲ Available through USB port (PXPM)

Powering Business Worldwide

Eaton
1000 Eaton Boulevard
Cleveland, OH 44122
United States
Eaton.com

© 2020 Eaton
All Rights Reserved
Printed in USA
Publication No. PA012024EN / Z24120
May 2020

Follow us on social media to get the latest product and support information.

Eaton is a registered trademark.

All other trademarks are property of their respective owners.

Submittal Spec Sheet
PS01005006E

Effective May 2016
Supersedes March 2014

CVX050/100 models, surge protective device

Introduction

With more than two decades of experience in the surge suppression industry and extensive R&D initiatives, Eaton is considered to be a world leader in surge protective device (SPD) manufacturing.

Application description

Medium and low exposure level AC power service entrances, branch panels, and/or individual equipment disconnects feed all types of loads.

- Nominal discharge current: 20 kA
- Short-circuit current rating: 100 kA

Features

General features

- Parallel configured, hardwire connected, SPD
- Peak surge current
  - CVX050: 50 kA
  - CVX100: 100 kA
- Warranty: five-year free replacement

Mechanical and electrical features

- Enclosure: NEMA® 4X (IP56) polycarbonate weatherproof enclosure (meets or exceeds NEMA 1, 2, 4, 4X, 12, and 13)
- Mounting: threaded conduit fitting and multi-point case mounting holes (external mounting feet available separately)
- Connection: #10 (6 mm^2) stranded wire
- Weight: ≈2.0 lb (1.0 kg)
- Operating temperature: –13 °F to +140 °F (–25 °C to +60 °C)
- Protection: all modes
- Input power frequency: 47–420 Hz (50/60 Hz typical)
- Diagnostics: LED indicators, one per phase, normally ON

Optional features and equipment

- External mounting feet
- Flush mount plate

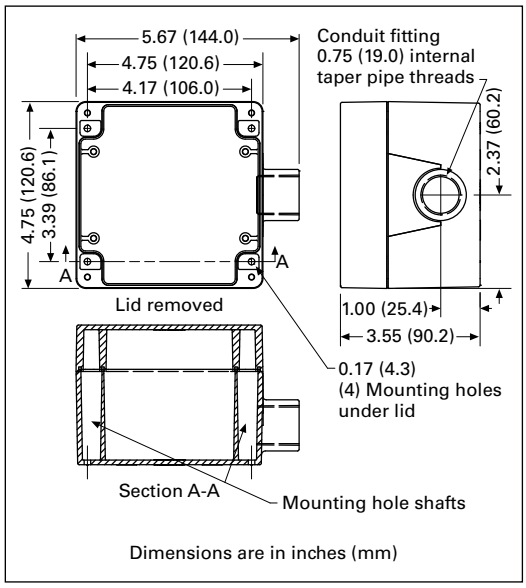

Figure 1. Standard dimensions

Standards and certifications

- Unit listings:① UL® 1449 4th Edition; permanently connected; Type 1 and 2; CSA® marked
- CE Compliant to IEC 61643-1 Test Classification I and II
- Vibration tested to IEC 60255-21-1 and -2
- Manufacturer qualifications: ISO® 9001:1994 Quality System Certification BSI FM 30833

① CE, CSA, and UL on AC unit only.

Powering Business Worldwide

Technical data

Table 1. CVX050/100 voltage ratings

Model	System configuration	Nominal system voltage	MCOV L-L	MCOV L-N	MCOV L-G	MCOV N-G	UL 1449-4 VPR ① L-L	UL 1449-4 VPR ① L-N	UL 1449-4 VPR ① L-G	UL 1449-4 VPR ① N-G
CVX050										
230L	Single-phase two-wire + ground	200, 208, 220, 230, 240, 277	—	320	640	320	—	1200	1200	1200
480L	Single-phase two-wire + ground	380, 400, 440, 460, 480	—	550	1100	550	—	1800	4000	1800
240S	Split-phase three-wire + ground	100/200, 110/220, 120/240	300	150	300	150	1200	700	1200	800
208Y	Three-phase wye (star) four-wire + ground	100/175, 110/190, 120/208, 127/220	300	150	300	150	1200	700	1200	800
480Y	Three-phase wye (star) four-wire + ground	220/380, 230/400, 240/415, 277/480	640	320	640	320	2500	1200	2000	1200
600Y	Three-phase wye (star) four-wire + ground	305/525, 347/600	840	420	840	420	2500	1500	2500	1500
240D	Three-phase delta three-wire + ground	200, 208, 220, 230, 240	640	—	320	—	2000	—	1200	—
240H	Three-phase high leg delta	240	300	150	150	640	1500	700	1200	700
480D	Three-phase delta three-wire + ground	380, 400, 415, 440, 480	1100	—	550	—	3000	—	1800	—
600D	Three-phase delta three-wire + ground	525, 600	1100	—	700	—	3000	—	2500	—
048DC	Direct current	48 Vdc ②	130	—	65	—	—	—	—	—
125DC	Direct current	125 Vdc ②	288	—	144	—	—	—	—	—
CVX100										
230L	Single-phase two-wire + ground	200, 208, 220, 230, 240, 277	—	320	320	320	—	1200	1200	1200
480L	Single-phase two-wire + ground	380, 400, 440, 460, 480	—	550	550	550	—	1800	1800	1800
240S	Split-phase three-wire + ground	100/200, 110/220, 120/240	300	150	150	150	1200	700	800	700
208Y	Three-phase wye (star) four-wire + ground	100/175, 110/190, 120/208, 127/220	300	150	150	150	1000	600	700	700
480Y	Three-phase wye (star) four-wire + ground	220/380, 230/400, 240/415, 277/480	640	320	320	320	1800	1200	1200	1200
600Y	Three-phase wye (star) four-wire + ground	305/525, 347/600	840	420	420	420	2500	1500	1500	1500
240D	Three-phase delta three-wire + ground	200, 208, 220, 230, 240	640	—	320	—	1800	—	1200	—
240H	Three-phase high leg delta	240	300	150	150	150	1200	700	700	700
480D	Three-phase delta three-wire + ground	380, 400, 415, 440, 480	1100	—	550	—	3000	—	1800	—

① UL 1449 4th Edition VPR (voltage protection rating) test environment: All tests performed with 6-inch lead length, positive polarity.

② DC models only available in 50 kA.

Product selection

Table 2. Catalog numbering system

CVX 050 230L

Per phase peak surge current
050 = 50 kA
100 = 100 kA ①

Configuration and voltage ranges (Vac)
230L = Single-phase—200, 208, 220, 230, 240, 277
480L = Single-phase—380, 400, 440, 460, 480
240S = Split-phase—100/200, 110/220, 120/240
240H = Three-phase high leg delta—120/240
208Y = Three-phase wye (star)—100/174, 110/190, 120/208, 127/220
480Y = Three-phase wye (star)—220/380, 230/400, 240/415, 277/480
600Y = Three-phase wye (star)—305/525, 347/600
240D = Three-phase delta—200, 208, 220, 230, 240
480D = Three-phase delta—380, 400, 415, 440, 480
600D = Three-phase delta—525, 600 (600D available in 50 kA only)
048DC = Direct current—48 Vdc ①
125DC = Direct current—125 Vdc ①

① DC models only available in 50 kA.

Eaton
1000 Eaton Boulevard
Cleveland, OH 44122
United States
Eaton.com

© 2016 Eaton
All Rights Reserved
Printed in USA
Publication No. PS01005006E / Z18202
May 2016

Eaton is a registered trademark.

All other trademarks are property of their respective owners.

Powering Business Worldwide