B___ - ___

LOCATION MAP

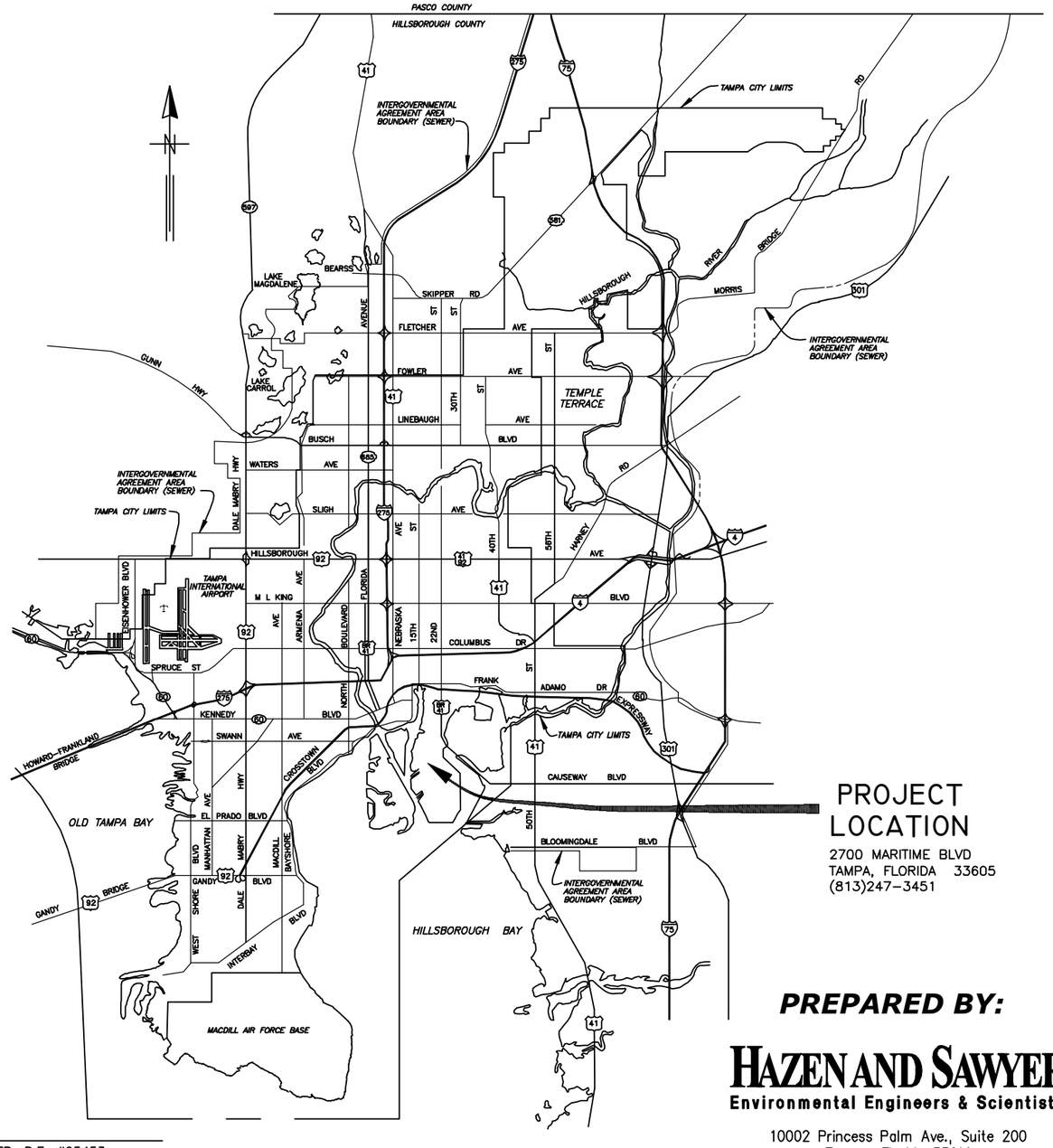

PROJECT LOCATION

2700 MARITIME BLVD
TAMPA, FLORIDA 33605
(813)247-3451

CITY of TAMPA

WASTEWATER DEPARTMENT

PLANS FOR

HOWARD F CURREN AWTP GRAVITY THICKENER AND SLUDGE PUMP REPLACEMENT

CONTRACT No.

13-C-00044

PREPARED BY:

HAZEN AND SAWYER
Environmental Engineers & Scientists

10002 Princess Palm Ave., Suite 200
Tampa, Florida 33619
Certificate of Authorization Number: 2771

JACOB L. PORTER, P.E. #65453
HAZEN AND SAWYER, P.C. (MECH)
10002 PRINCESS PALM AVE, SUITE 200
TAMPA, FL 33619, (813)630-4498

DANIEL B. SCHMIDT, P.E. #40233
HAZEN AND SAWYER, P.C. (ELECT)
10002 PRINCESS PALM AVE, SUITE 200
TAMPA, FL 33619, (813)630-4498

No.	DATE	REVISIONS
3		
2	JULY 2013	FINAL DRAWINGS
1	MAY 2013	90% SUBMITTAL

DES: JLP
DRN: SMZ
CKD: DBS
DATE: JULY 2013

CITY of TAMPA
WASTEWATER DEPARTMENT
HOWARD F CURREN AWTP

GRAVITY THICKENER & SLUDGE PUMP REPLACEMENT
COVER SHEET

W.O. 8
SHEET 1 OF 14

PLOT
User: szagurski Drawing Name: H:\41077-003\General\G-1-G-2.dwg
Layout- Jul 16, 2013 - 1:14pm CTB - CITY OF TAMPA.CTB

B___-___

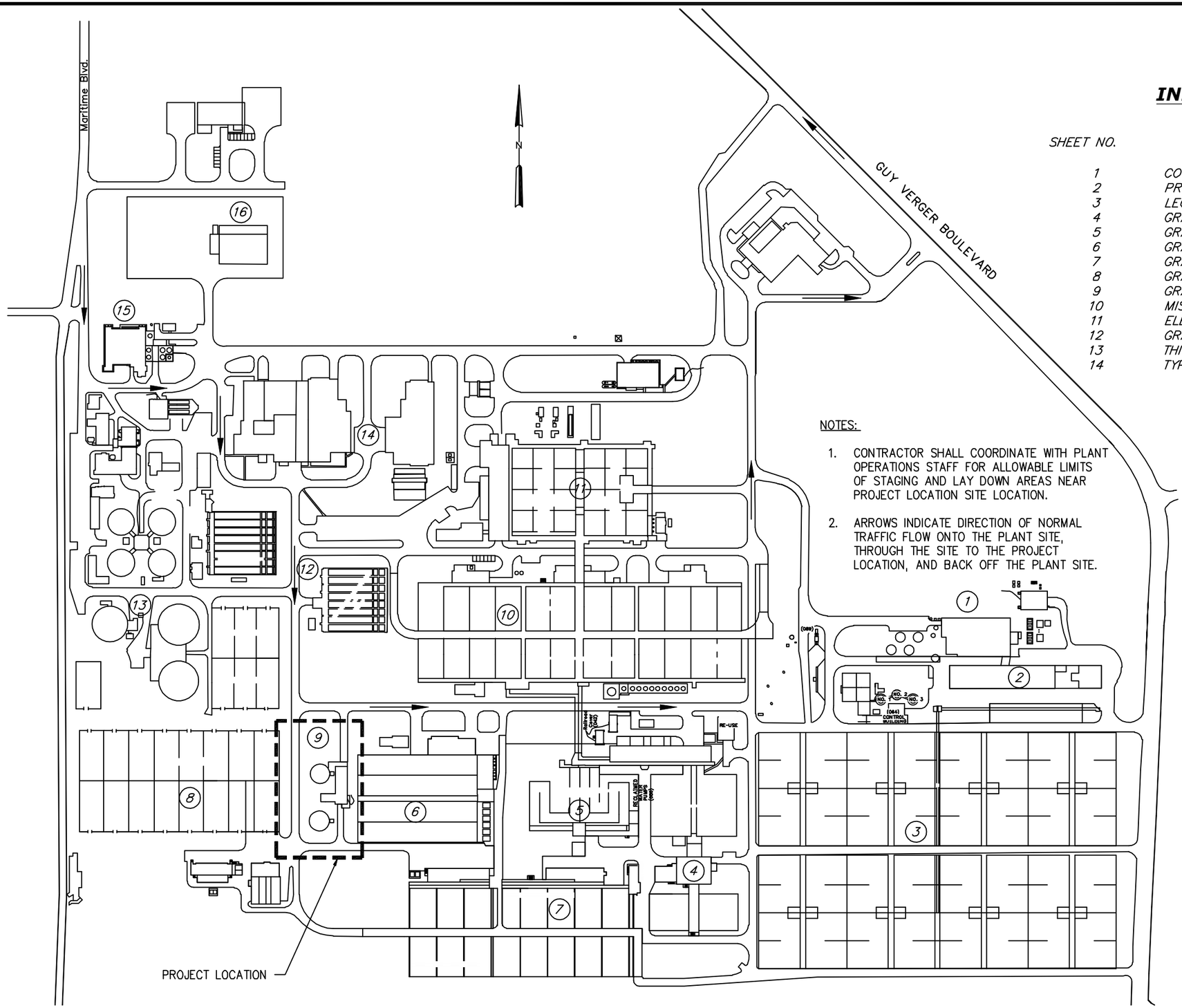

INDEX OF DRAWINGS

SHEET NO.	SHEET DESCRIPTION
1	COVER SHEET
2	PROJECT LOCATION MAP AND INDEX OF DRAWINGS
3	LEGEND, SYMBOLS, ABBREVIATIONS, AND GENERAL NOTES
4	GRAVITY THICKENER BUILDING – LOWER PLAN
5	GRAVITY THICKENER BUILDING – UPPER PLAN
6	GRAVITY THICKENER SLUDGE PUMPS AND PIPING DEMOLITION
7	GRAVITY THICKENER SLUDGE PUMPS AND PIPING REPLACEMENT
8	GRAVITY THICKENER MECHANISM REPLACEMENT – PLAN VIEW
9	GRAVITY THICKENER MECHANISM REPLACEMENT – SECTION
10	MISCELLANEOUS MECHANICAL DETAILS
11	ELECTRICAL SYMBOLS, LEGEND, AND GENERAL NOTES
12	GRAVITY THICKENER ELECTRICAL COMPONENT REPLACEMENT
13	THICKENED SLUDGE PUMPS ELECTRICAL COMPONENT REPLACEMENT
14	TYPICAL FLOW METER INTERFACE WIRING SCHEMATIC

NOTES:

1. CONTRACTOR SHALL COORDINATE WITH PLANT OPERATIONS STAFF FOR ALLOWABLE LIMITS OF STAGING AND LAY DOWN AREAS NEAR PROJECT LOCATION SITE LOCATION.
2. ARROWS INDICATE DIRECTION OF NORMAL TRAFFIC FLOW ONTO THE PLANT SITE, THROUGH THE SITE TO THE PROJECT LOCATION, AND BACK OFF THE PLANT SITE.

1. SLUDGE HEAT DRYING FACITLITY
2. SLUDGE DEWATERING BUILDING
3. SLUDGE DRYING BEDS
4. DENITRIFICATION FILTERS
5. POST-AERATION CHLORINATION TANKS
6. DIFFUSED AIR REACTORS
7. FINAL SEDIMENTATION TANKS
8. SLUDGE DRYING BEDS
9. SLUDGE THICKENING
10. FINAL SEDIMENTATION TANKS
11. HPO REACTOR TANKS
12. PRIMARY SEDIMENTATION TANKS
13. SLUDGE DIGESTION TANKS
14. SCREEN AND GRIT BUILDING
15. JUNCTION CHAMBER AND METER VAULT
16. WAREHOUSE

JACOB L. PORTER, P.E. #65453
HAZEN AND SAWYER, P.C.
10002 PRINCESS PALM AVE, SUITE 200
TAMPA, FL 33619, (813)630-4498

No.	DATE	REVISIONS
3		
2	JULY 2013	FINAL DRAWINGS
1	MAY 2013	90% SUBMITTAL

DES: JLP
DRN: SMZ
CKD: DBS
DATE: JULY 2013

CITY of TAMPA
WASTEWATER DEPARTMENT
HOWARD F CURREN AWTP

GRAVITY THICKENER & SLUDGE PUMP REPLACEMENT
PROJECT LOCATION MAP AND INDEX OF DRAWINGS

W.O. 8
SHEET 2 OF 14

User: szagurski Drawing Name: H:\41077-003\General\G-1-G-2.dwg
Layout- Jul 16, 2013 - 1:14pm CTB - CITY OF TAMPA.CTB

B___-___

SYMBOLS

MISCELLANEOUS SYMBOLS

- MAG METER
- PROPOSED PIPELINE (DOUBLE LINE IF SCALE OF DRAWING PERMITS)
- HARNESSED MECHANICAL COUPLING

FLANGED JOINT FITTINGS

- TEE (SIDE VIEW)
- TEE (TOP VIEW)
- TEE (BOTTOM VIEW)
- CROSS (SIDE VIEW)
- CROSS (TOP VIEW)
- 90 BEND (SIDE VIEW)
- 90 BEND (ROTATED DOWN)
- 90 BEND (ROTATED UP)
- 45 BEND (SIDE VIEW)
- 45 BEND (TOP VIEW)
- 22–1/2 BEND (SIDE VIEW)
- 22–1/2 BEND (TOP VIEW)
- 11–1/4 BEND (SIDE VIEW)
- 11–1/4 BEND (TOP VIEW)
- REDUCER
- ECCENTRIC REDUCER (SIDE VIEW)
- ECCENTRIC REDUCER (TOP VIEW)
- REDUCING ELBOW (SIDE VIEW)
- REDUCING ELBOW (TOP VIEW)

VALVES AND INSTRUMENTS

- AIR RELIEF VALVE
- BALL VALVE
- PLUG VALVE
- GAUGE
- MOTOR OPERATED

ABBREVIATIONS

PIPING

CIP	CAST IRON PIPE
DIP	DUCTILE IRON PIPE
GSP	GALVANIZED STEEL PIPE
PVC	POLYVINYL CHLORIDE

VALVES, FITTINGS, ETC.

45B	DEGREE OF BEND
90VB	DEGREE OF VERTICAL BEND
ARV	AIR RELIEF VALVE
BV	BALL VALVE
BF	BLIND FLANGE
BFP	BACK FLOW PREVENTER
BF V	BUTTERFLY VALVE
CMP	CORRUGATED METAL PIPE
CLV	CHLORINE GAS VALVE UNDER VACUUM
CU YD	CUBIC YARD
CV	CHECK VALVE
CPLG	COUPLING
ED	EQUIPMENT DRAIN
EXP JT	EXPANSION JOINT
FAR	FLOOR TO AREA RATIO
FH	FIRE HYDRANT
FT	FEET
FTG	FITTING
FLG/FL	FLANGE
FD	FLOOR DRAIN
FRC	FLEXIBLE RUBBER COUPLING
GV	GATE VALVE
HB	HOSE BIBB
MJ	MECHANICAL JOINT
NPT	NATIONAL PIPE THREAD
PE	PLAIN END
PV	PLUG VALVE
PS	PUMP STATION
PRV	PRESSURE RELIEF VALVE
RCP	REINFORCED CONCRETE PIPE
SOV	SOLENOID OPERATED VALVE
THD	THREADED
VAC	VACUUM

GENERAL

AC	ASBESTOS COATED
A/C	AIR CONDITIONER
AL, ALUM	ALUMINUM
AB	ANCHOR BOLT
APPROX	APPROXIMATE
ARCH	ARCHITECTURAL
ASPH	ASPHALT
BLK	BLOCK
BOL	BOLLARD
BOTT	BOTTOM
BLDG	BUILDING
CB	CATCH BASIN
CE	CONSTRUCTION EASEMENT
CLF	CHAIN LINK FENCE
CLP	CONCRETE LIGHT POLE
CM	CONCRETE MASONRY
CP	SURVEY CONTROL POINT OR CONTROL PANEL
C/S	CONCRETE SLAB
℄	CENTER LINE
CS	HYPOCHLORITE SOLUTION
CO	CLEAN OUT
CLR	CLEAR
COL	COLUMN
CONC	CONCRETE
CONT	CONTINUOUS
DET	DETAIL
DIAG	DIAGONAL
DIA	DIAMETER
DIM	DIMENSION
DISCH	DISCHARGE
DWL	DOWEL
DN	DOWN
DWG	DRAWING
D	DRAIN
EA	EACH
EE	EACH END
ES	EACH SIDE
E	EASTING
EOP	EDGE OF PAVEMENT
EF	EACH FACE
EW	EACH WAY
ECC	ECCENTRIC
EFF	EFFLUENT
ELEC	ELECTRIC
EL, ELEV	ELEVATION
EMBED	EMBEDDMENT
EQUIP	EQUIPMENT
EXH	EXHAUST
EXIST	EXISTING
EXP	EXPANSION
EXT	EXTERIOR
FIN	FINISH
FL	FLOOR
FTG	FOOTING
FF	FINISHED FLOOR
GAL	GALLON
GALV	GALVANIZED
GR	GRADE
GRAV DRAIN	GRAVITY DRAIN
HR	HANDRAIL
HP	HIGH POINT
HWL	HIGH WATER LEVEL
HORIZ	HORIZONTAL
INJ	INJECTION
ID	INSIDE DIAMETER
IRC	IRON ROD & CAP
ISO	ISOLATION
INV	INVERT
JB	JUNCTION BOX
LG	LONG
LP	LOW POINT
LWL	LOW WATER LEVEL
MH	MANHOLE
MFRS	MANUFACTURERS
MAX	MAXIMUM
MECH	MECHANICAL
MG	MILLION GALLON
MIN	MINIMUM
MOV	MOTOR OPERATED VALVE
MISC	MISCELLANEOUS
N	NORTHING
NPW	NON POTABLE WATER
NIC	NOT IN CONTRACT
NTS	NOT TO SCALE
NO	NUMBER
OHW	OVERHEAD WIRE
OC	ON CENTER
OPNG	OPENING
OD	OUTSIDE DIAMETER
PP	POWER POLE
PS	PRESSURE SWITCH
PW, W	POTABLE WATER
P/L	PROPERTY LINE
PD	PROCESS DRAIN
R	RADIUS
RAW	RAW WATER
RED	REDUCER
REINF	REINFORCING
REQ'D	REQUIRED
RJ	RESTRAINED JOINT
R/W, ROW	RIGHT OF WAY
SECT	SECTION
SCH	SCHEDULE
SHT	SHEET
SPEC	SPECIFICATION
SQ	SQUARE
STL	STEEL
STRUC	STRUCTURAL
SST	STAINLESS STEEL
TEMP	TEMPORARY
TOC	TOP OF CONCRETE
TOS	TOP OF SLAB
TYP	TYPICAL
TOP	TOP OF PIPE
UGE	UNDERGROUND ELECTRIC
VERT	VERTICAL
WWF	WELDED WIRE FABRIC
W/	WITH

LANDSCAPING

CAL	CALIPER
HT	HEIGHT
SPR	SPREAD
GAL	GALLON

SECTION AND DETAIL IDENTIFICATION

SECTION AND DETAIL IDENTIFICATION

SECTION IDENTIFICATION

(1) SECTION CUT ON DRAWING 1:

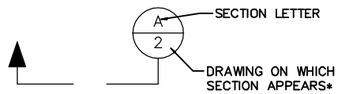

(2) ON DRAWING 2 THIS SECTION IS IDENTIFIED AS:

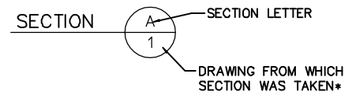

DETAIL IDENTIFICATION

(1) DETAIL CALL–OUT ON DRAWING 1 AS:

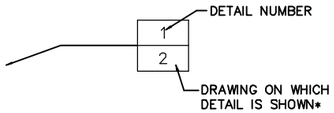

(2) ON DRAWING 2 THIS DETAIL IDENTIFIED AS:

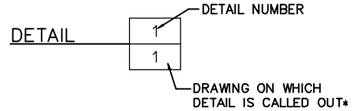

STANDARD DETAIL IDENTIFICATION

(1) DETAIL CALL–OUT ON PLAN OR SECTION:

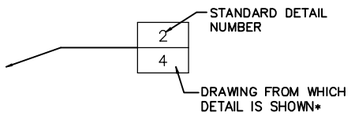

(2) ON DRAWING 4 THIS DETAIL IDENTIFIED AS:

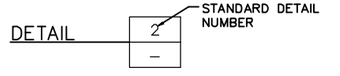

* NOTE: IF PLAN AND SECTION (OR DETAIL CALL–OUT AND DETAIL) ARE SHOWN ON SAME DRAWING, DRAWING NUMBER IS REPLACE BY A LINE.

NOTES:

(1) ELECTRICAL SYMBOLS SHOWN ON ELECTRICAL DWGS.

(2) FOR WELDING SYMBOLS USE AMERICAN WELDING SOCIETY STANDARD SYMBOLS. SEE AMERICAN INSTITUTE OF STEEL CONSTRUCTION MANUAL.

(3) EXISTING EQUIPMENT, STRUCTURES, AND BUILDINGS ARE SHOWN LIGHT LINED. NEW EQUIPMENT, PIPING, FITTINGS, AND VALVES ARE SHOWN DARK LINED.

GENERAL PROJECT NOTES:

1. CONTRACTOR SHALL REPLACE BOTH EXISTING SLUDGE THICKENER MECHANISMS WITHIN THE EXISTING CONCRETE TANKS. REPLACEMENT MECHANISMS INCLUDE THE CENTER COLUMN, RAKES, DRIVES, BRIDGE, AND ALL OTHER COMPONENTS AS LISTED IN THE EQUIPMENT SPECIFICATIONS AND AS SHOWN ON THE DRAWINGS.
2. CONTRACTOR SHALL REPLACE ALL FOUR EXISTING THICKENED SLUDGE PUMPS AND ASSOCIATED PIPING, FITTINGS, AND VALVES AS SPECIFIED AND SHOWN.
3. CONTRACTOR SHALL REPLACE ALL EXISTING CONDUIT RUNS, RECEPTACLES, LIGHT FIXTURES, AND LOCAL CONTROL STATIONS TO THE EXTENT SHOWN ON THE DRAWINGS FOR THE THICKENED MECHANISMS, REUSING EXISTING CABLE PULLED THROUGH THE NEW CONDUIT SYSTEM.
4. CONTRACTOR SHALL REPLACE ALL EXISTING CONDUIT RUNS, FLOW METERS, AND LOCAL CONTROL STATIONS TO THE EXTENT SHOWN ON THE DRAWINGS FOR THE THICKENED SLUDGE PUMPS, REUSING EXISTING CABLE PULLED THROUGH THE NEW CONDUIT SYSTEM.
5. CONTRACTOR SHALL COORDINATE ALL CONSTRUCTION ACTIVITIES WITH TREATMENT PLANT PERSONNEL AND PLANT OPERATIONS. DUE TO THE NATURE OF THE WORK, ONLY ONE MECHANISM AND SET OF PUMPS CAN BE REPLACED AT A TIME.
6. EXISTING DIMENSIONS ARE BASED ON AS-BUILT DRAWINGS. TRUE DIMENSIONS SHALL BE DETERMINED IN THE FIELD PRIOR TO LAYOUT AND SHOP DRAWING SUBMITTAL.
7. SHOP DRAWINGS SHALL BE SUBMITTED FOR ALL PROPOSED NEW ITEMS. SHOP DRAWINGS, BOTH HARD COPIES OR ELECTRONIC IN PDF FORMAT, SHALL BE HIGH QUALITY AND EASILY READABLE.
8. CONTRACTOR IS RESPONSIBLE FOR MEETING ALL FEDERAL, STATE, AND LOCAL GOVERNMENT REGULATIONS IN REGARDS TO WORKING CONDITIONS AND MATERIALS HANDLING AND DISPOSAL.
9. CONTRACTOR SHALL MEET ALL REQUIREMENTS AS LISTED IN THE SPECIFIC PROVISIONS AND INDIVIDUAL SPECIFICATION SECTIONS INCLUDED IN THE CONTRACT DOCUMENTS.

JACOB L. PORTER, P.E. #65453
HAZEN AND SAWYER, P.C.
10002 PRINCESS PALM AVE, SUITE 200
TAMPA, FL 33619, (813)630–4498

No.	DATE	REVISIONS
3		
2	JULY 2013	FINAL DRAWINGS
1	MAY 2013	90% SUBMITTAL

DES: JLP
DRN: SMZ
CKD: DBS
DATE: JULY 2013

CITY of TAMPA
WASTEWATER DEPARTMENT
HOWARD F CURREN AWTP

GRAVITY THICKENER & SLUDGE PUMP REPLACEMENT
LEGENDS, SYMBOLS, ABBREVIATIONS, AND GENERAL NOTES

W.O. 8
SHEET 3 OF 14

User: szogurski Drawing Name: H:\41077-003\General\G-1-G-2.dwg
Layout= Jul 16, 2013 - 1:14pm CTB - CITY OF TAMPA.CTB

1/16"=1'-0"

16 8 0 16'

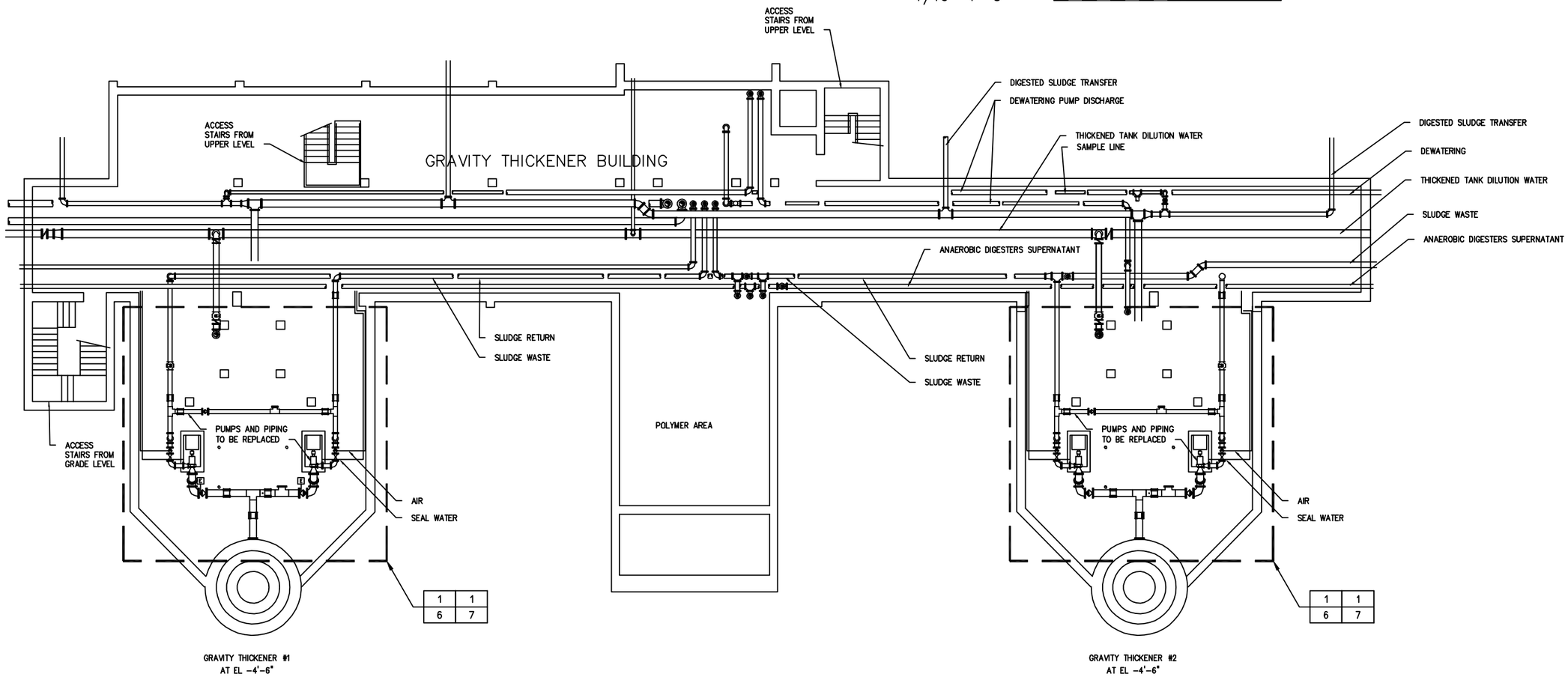

GRAVITY THICKENER #1
AT EL -4'-6"

GRAVITY THICKENER #2
AT EL -4'-6"

JACOB L. PORTER, P.E. #65453
HAZEN AND SAWYER, P.C.
10002 PRINCESS PALM AVE, SUITE 200
TAMPA, FL 33619, (813)630-4498

No.	DATE	REVISIONS
3		
2	JULY 2013	FINAL DRAWINGS
1	MAY 2013	90% SUBMITTAL

DES: JLP
DRN: SMZ
CKD: DBS
DATE: JULY 2013

CITY of TAMPA
WASTEWATER DEPARTMENT
HOWARD F CURREN AWTP

GRAVITY THICKENER & SLUDGE PUMP REPLACEMENT
GRAVITY THICKENER BUILDING
LOWER LEVEL

W.O. 8
SHEET 4 OF 14

User: szagurski Drawing Name: H:\41077-003\Mech\4 Gravity Thickner Building.dwg
Layout- Jul 17, 2013 - 9:51am

1/16"=1'-0"

16 8 0 16'

GRAVITY THICKENER BUILDING

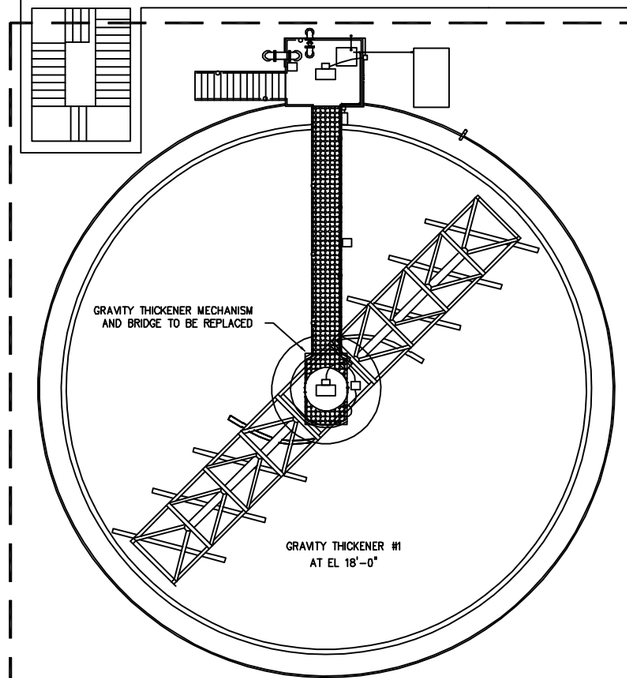

1/8

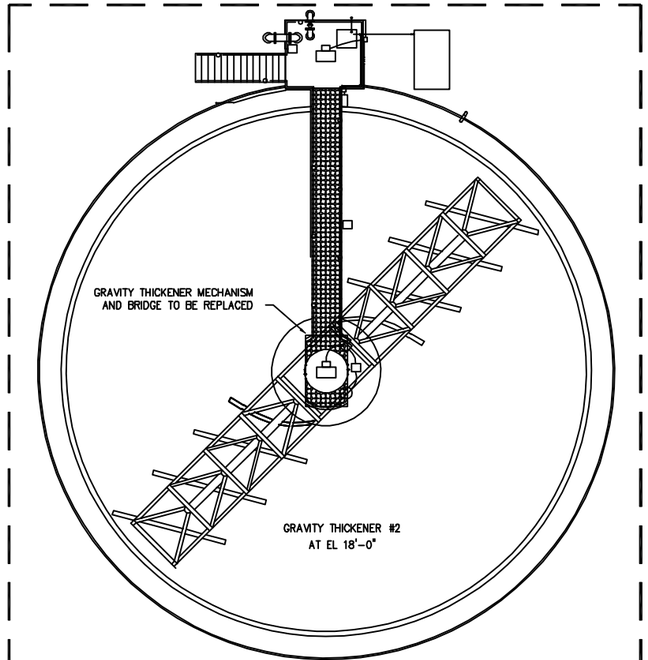

1/8

JACOB L. PORTER, P.E. #65453
HAZEN AND SAWYER, P.C.
10002 PRINCESS PALM AVE, SUITE 200
TAMPA, FL 33619, (813)630-4498

No.	DATE	REVISIONS
3		
2	JULY 2013	FINAL DRAWINGS
1	MAY 2013	90% SUBMITTAL

DES: JLP
DRN: SMZ
CKD: DBS
DATE: JULY 2013

CITY of TAMPA
WASTEWATER DEPARTMENT
HOWARD F CURREN AWTP

GRAVITY THICKENER & SLUDGE PUMP REPLACEMENT
GRAVITY THICKENER BUILDING
UPPER LEVEL

W.O. 8
SHEET 5 OF 14

User: szagurski Drawing Name: H:\41077-003\Mech\5 Gravity Thickner Building - Upper Plan - 4.dwg
Layout- Jul 16, 2013 - 8:08am

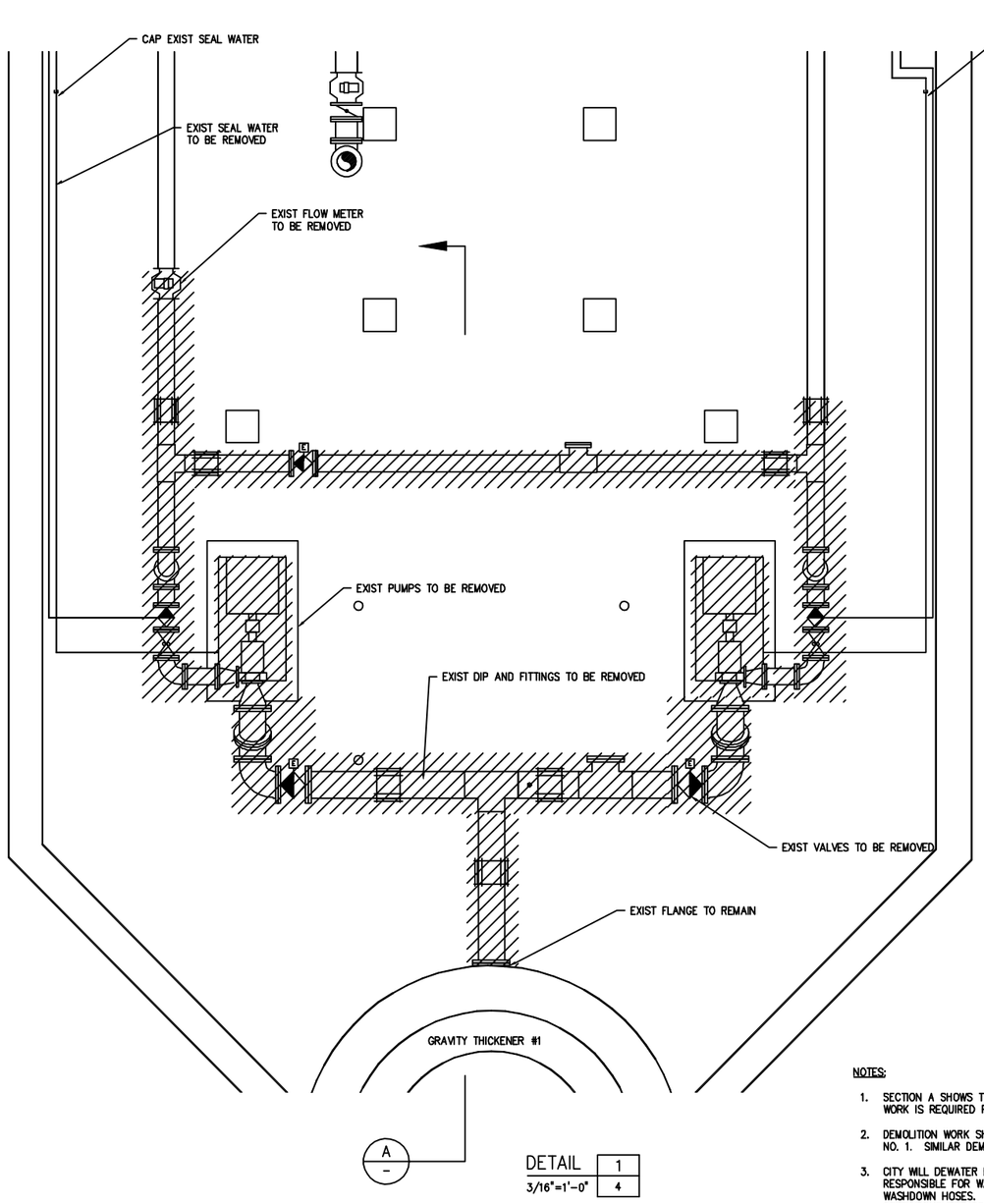

DETAIL 1
3/16"=1'-0" 4

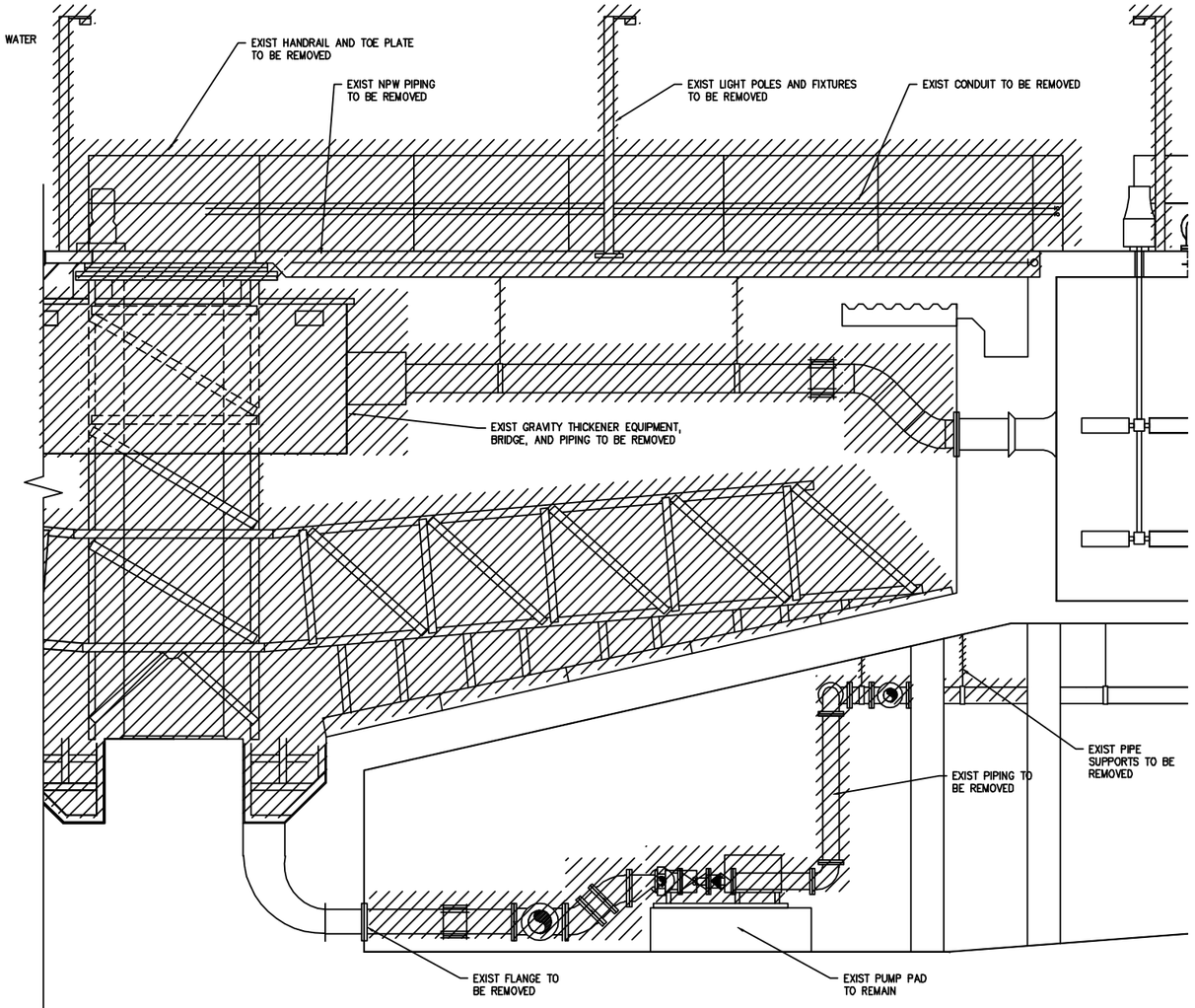

SECTION A
3/16"=1'-0" –

NOTES:

1. SECTION A SHOWS THE EASTERN HALF OF THE THICKENER TANK. SIMILAR DEMOLITION WORK IS REQUIRED FOR THE WESTERN HALF.
2. DEMOLITION WORK SHOWN ON THIS SHEET ON DETAIL 1 AND SECTION A IS FOR THICKENER NO. 1. SIMILAR DEMOLITION SCOPE OF WORK IS REQUIRED FOR THICKENER NO. 2.
3. CITY WILL DEWATER EACH THICKENER PRIOR TO BEGINNING WORK. CONTRACTOR SHALL BE RESPONSIBLE FOR WASH DOWN OF RESIDUAL BIOSOLIDS USING PLANT NON-POTABLE WATER WASHDOWN HOSES. CONTRACTOR SHALL COOPERATE AND COORDINATE WITH PLANT OPERATIONS FOR SCHEDULING OF DEWATERING ACTIVITIES. AT LEAST ONE THICKENER MUST BE KEPT IN SERVICE AT ALL TIMES SO DEMOLITION AND REPLACEMENT WORK MUST BE COMPLETED ONE SYSTEM AT A TIME.

LEGEND

TO BE REMOVED

3/16"=1'-0"

6 4 2 0 5'

JACOB L. PORTER, P.E. #65453
HAZEN AND SAWYER, P.C.
10002 PRINCESS PALM AVE, SUITE 200
TAMPA, FL 33619, (813)630-4498

No.	DATE	REVISIONS
3		
2	JULY 2013	FINAL DRAWINGS
1	MAY 2013	90% SUBMITTAL

DES: JLP
DRN: SMZ
CKD: DBS
DATE: JULY 2013

CITY of TAMPA
WASTEWATER DEPARTMENT
HOWARD F CURREN AWTP

GRAVITY THICKENER & SLUDGE PUMP REPLACEMENT
GRAVITY THICKENER SLUDGE PUMP AND PIPING DEMOLITION

W.O. 8
SHEET 6 OF 14

User: szagurski Drawing Name: H:\41077-003\Mech\6 Gravity Thickner 1 And 2 Sludge Pumps And Pipe Demolition.dwg
Layout– Jul 16, 2013 – 8:43am

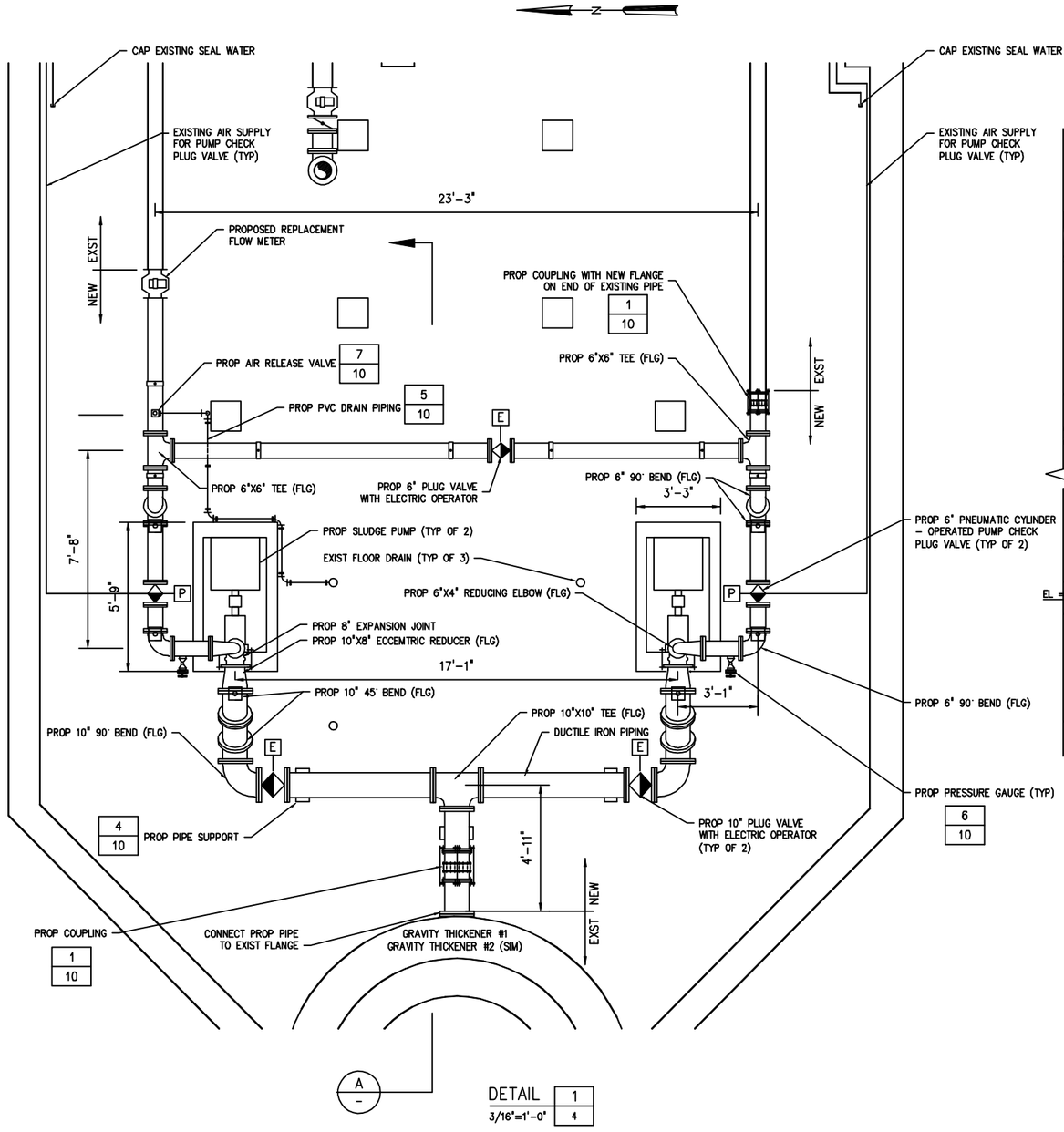

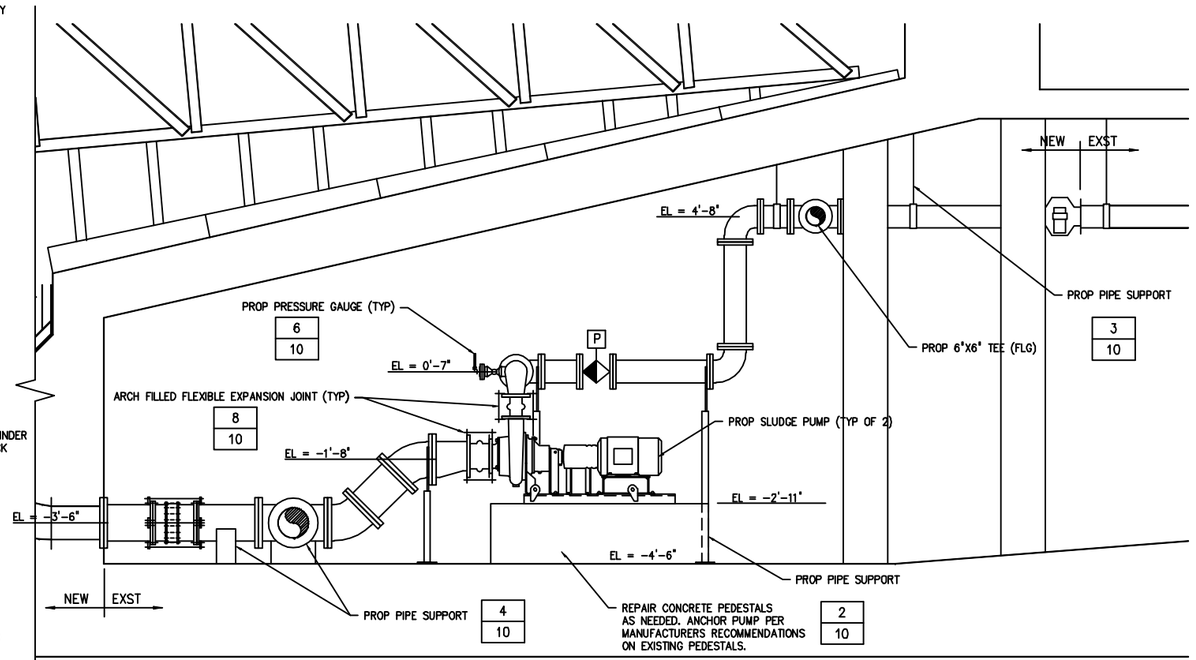

SECTION A / - 1/4"=1'-0"

NOTES:

1. PUMP AND PIPING REPLACEMENT WORK SHOWN ON THIS SHEET ON DETAIL 1 AND SECTION A IS FOR THICKENER NO. 1. SIMILAR PUMP AND PIPING REPLACEMENT SCOPE OF WORK IS REQUIRED FOR THICKENER NO. 2.
2. CONTRACTOR SHALL COOPERATE AND COORDINATE WITH PLANT OPERATIONS FOR SCHEDULING OF PUMP AND INSTRUMENT REPLACEMENT ACTIVITIES. AT LEAST ONE THICKENER MUST BE KEPT IN SERVICE AT ALL TIMES SO REPLACEMENT WORK MUST BE COMPLETED ONE SYSTEM AT A TIME.
3. SEE SPECIFICATIONS FOR LOCATION AND SPACING OF PIPE SUPPORTS. PIPE SUPPORTS ARE SHOWN IN GENERAL ONLY. PROVIDE SUFFICIENT SUPPORTS TO MEET SPECIFICATION REQUIREMENTS FOR A RIGIDLY SUPPORTED PIPE SYSTEM.

3/16"=1'-0" 6 4 2 0 5'

1/4"=1'-0" 1 0 1 2 3 7'

JACOB L. PORTER, P.E. #65453
HAZEN AND SAWYER, P.C.
10002 PRINCESS PALM AVE, SUITE 200
TAMPA, FL 33619, (813)630-4498

No.	DATE	REVISIONS
3		
2	JULY 2013	FINAL DRAWINGS
1	MAY 2013	90% SUBMITTAL

DES: JLP
DRN: SMZ
CKD: DBS
DATE: JULY 2013

CITY of TAMPA
WASTEWATER DEPARTMENT
HOWARD F CURREN AWTP

GRAVITY THICKENER & SLUDGE PUMP REPLACEMENT
GRAVITY THICKENER SLUDGE PUMPS AND PIPING REPLACEMENT

W.O. 8
SHEET 7 OF 14

User: szogurski Drawing Name: H:\41077-003\Mech\7 Gravity Thickner 1 And 2 Sludge Pumps And Pipe Modifications.dwg
Layout- Jul 17, 2013 - 10:50am

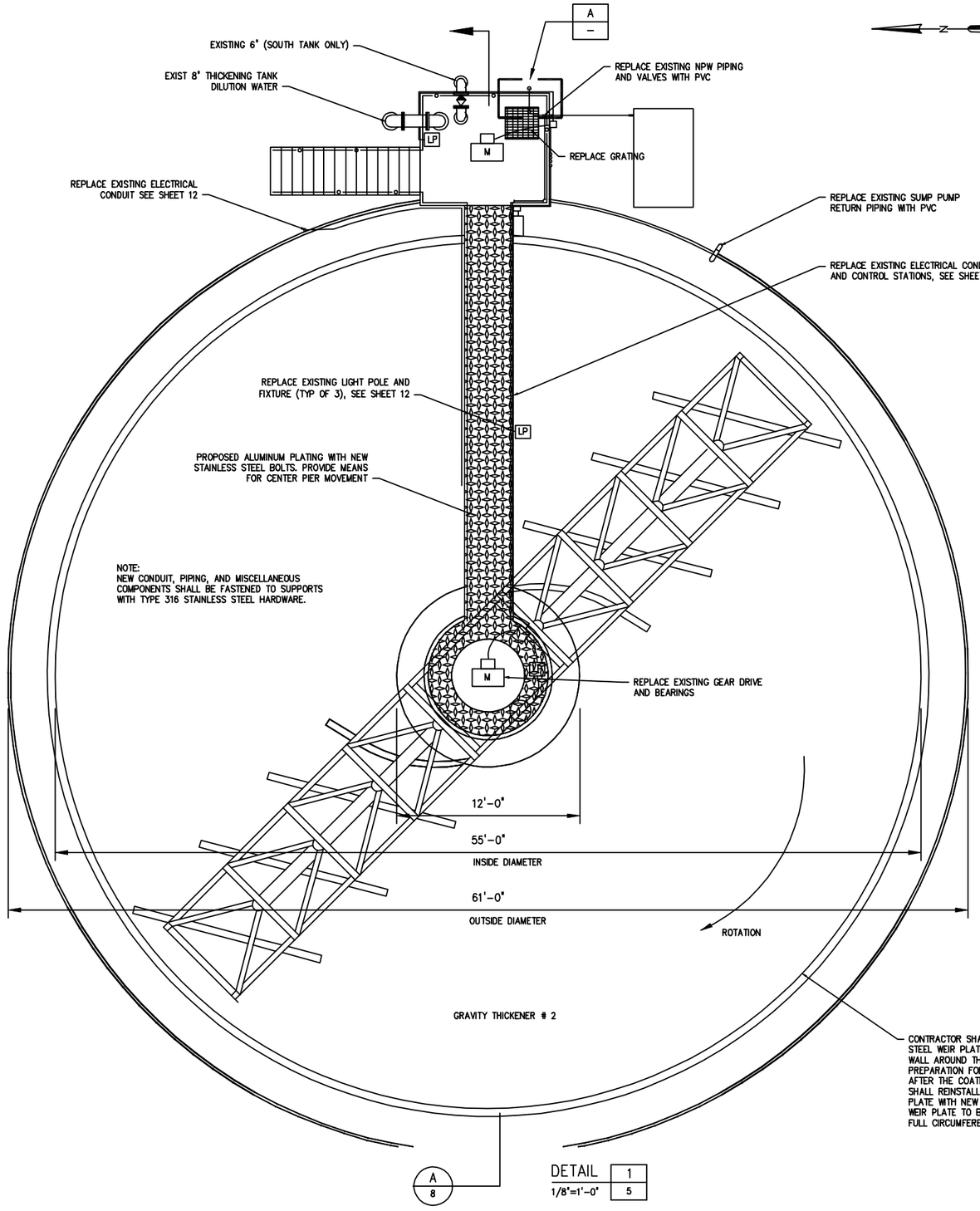

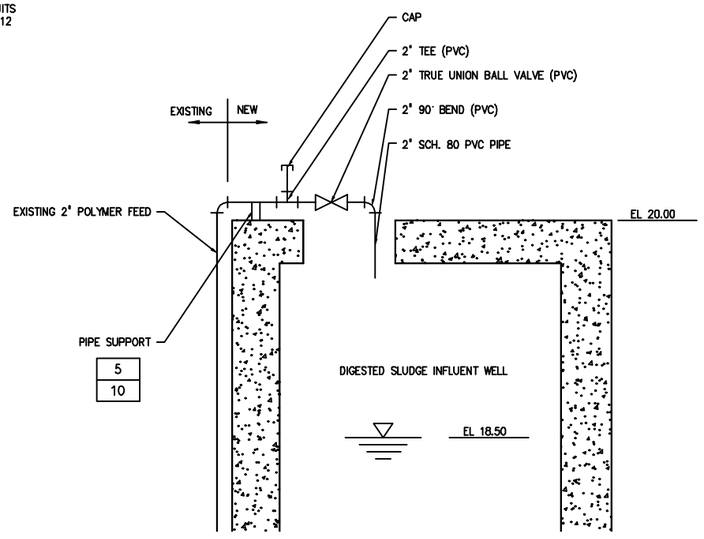

DETAIL A
NTS –

NEW POLYMER FEED PIPING FOR GRAVITY THICKENER #2

NOTES:

1. THICKENER REPLACMENT WORK SHOWN ON THIS SHEET IS FOR THICKENER NO. 2. SIMILAR THICKENER REPLACEMENT SCOPE OF WORK IS REQUIRED FOR THICKENER NO. 1.
2. CONTRACTOR SHALL COOPERATE AND COORDINATE WITH PLANT OPERATIONS FOR SCHEDULING OF THICKENER MOTOR AND INSTRUMENT REPLACEMENT ACTIVITIES. AT LEAST ONE THICKENER MUST BE KEPT IN SERVICE AT ALL TIMES SO REPLACEMENT WORK MUST BE COMPLETED ONE SYSTEM AT A TIME.

1/8"=1'-0"

8 6 4 2 0 8'

JACOB L. PORTER, P.E. #65453
HAZEN AND SAWYER, P.C.
10002 PRINCESS PALM AVE, SUITE 200
TAMPA, FL 33619, (813)630-4498

No.	DATE	REVISIONS
3		
2	JULY 2013	FINAL DRAWINGS
1	MAY 2013	90% SUBMITTAL

DES: JLP
DRN: SMZ
CKD: DBS
DATE: JULY 2013

CITY of TAMPA
WASTEWATER DEPARTMENT
HOWARD F CURREN AWTP

GRAVITY THICKENER & SLUDGE PUMP REPLACEMENT
GRAVITY THICKENER MECHANISM REPLACEMENT - PLAN VIEW

W.O. 8
SHEET 8 OF 14

User: szegurski Drawing Name: H:\41077-003\Mech\8 Gravity Thickner 1 And 2 Refurbishment Plan.dwg
Layout- Jul 16, 2013 - 8:36am

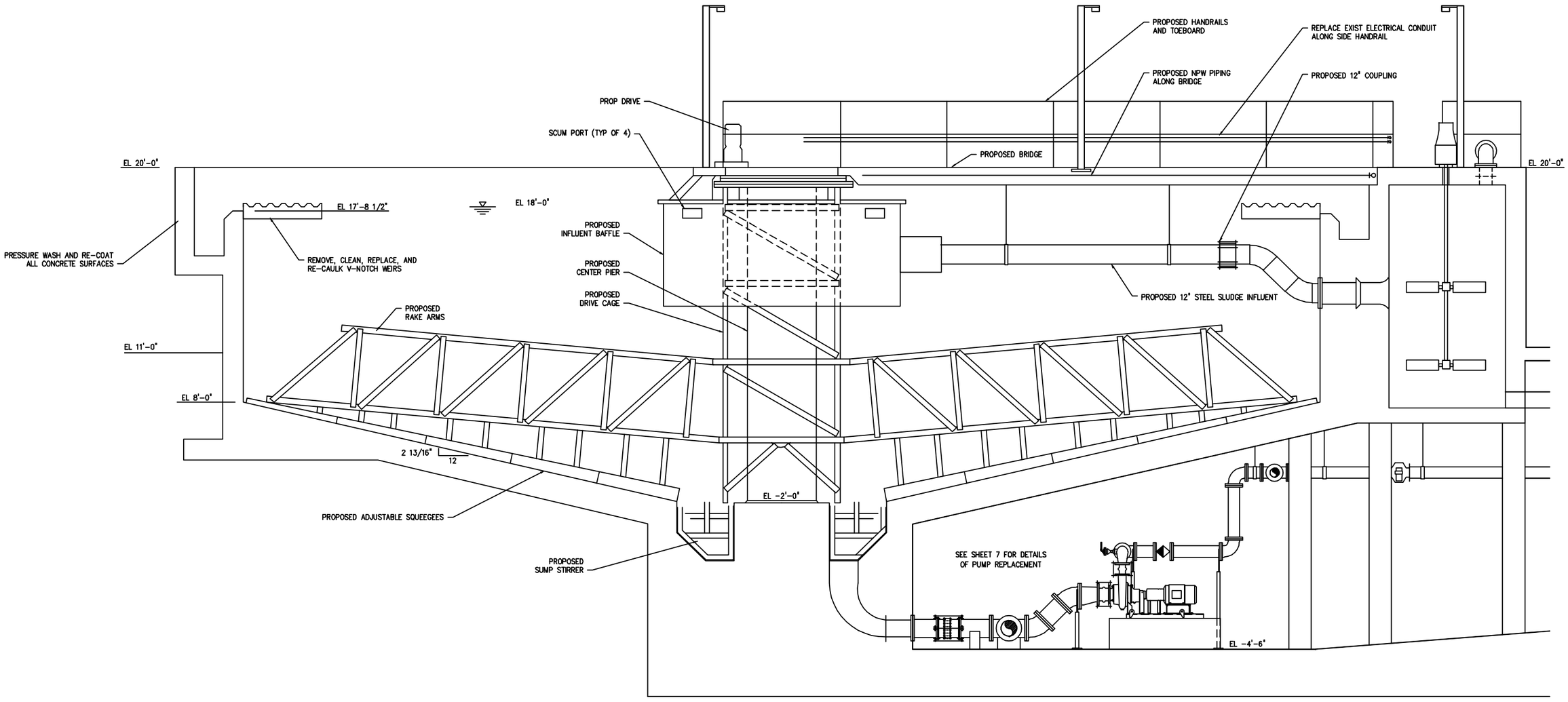

SECTION A 3/16"=1'-0"

3/16"=1'-0"

6 4 2 0 5'

No.	DATE	REVISIONS
3		
2	JULY 2013	FINAL DRAWINGS
1	MAY 2013	90% SUBMITTAL

JACOB L. PORTER, P.E. #65453
HAZEN AND SAWYER, P.C.
10002 PRINCESS PALM AVE, SUITE 200
TAMPA, FL 33619, (813)630-4498

DES: JLP
DRN: SMZ
CKD: DBS
DATE: JULY 2013

CITY of TAMPA
WASTEWATER DEPARTMENT
HOWARD F CURREN AWTP

GRAVITY THICKENER & SLUDGE PUMP REPLACEMENT
GRAVITY THICKENER MECHANISM REPLACEMENT - SECTION

W.O. 8
SHEET 9 OF 14

User: szegurski Drawing Name: H:\41077-003\Mech\9 Gravity Thickner 1 And 2 Refurbishment Section.dwg
Layout- Jul 16, 2013 - 8:43am

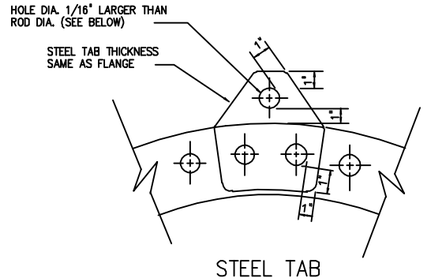

STEEL TAB

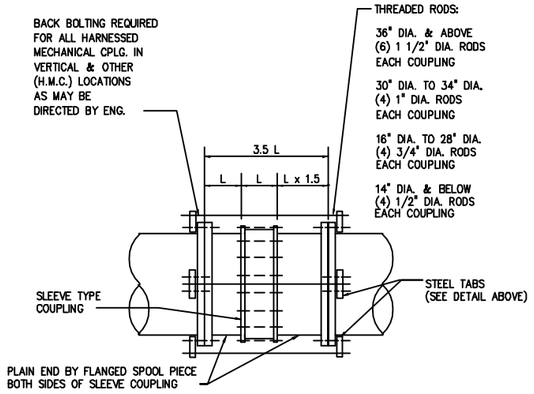

HARNESSED FLEXIBLE COUPLING

DETAIL	1
NTS	---

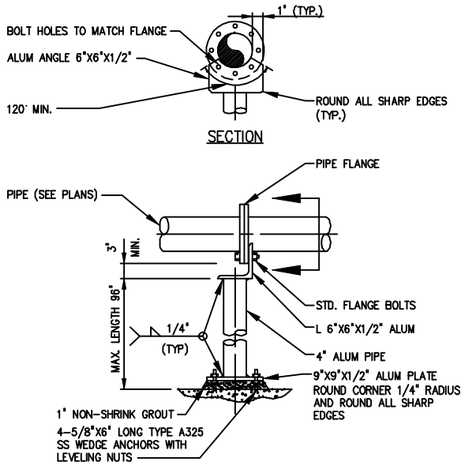

NOTES:

1. PIPE SUPPORT SUITABLE FOR PIPE SIZES 3" UP TO 24".

PIPE FLANGE SUPPORT

DETAIL	2
NTS	---

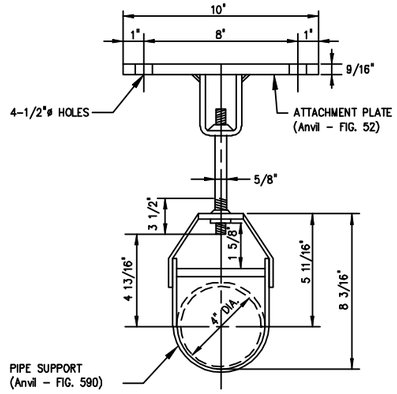

1. ALL TUBULAR MATERIAL TO BE NOMINAL DIAMETER SCHEDULE 40 ALUMINUM PIPE 6061-T6
2. PLATES AND GUSSETS TO BE STRUCTURAL GRADE ALUMINUM 6061-T6

CEILING MOUNTED PIPE SUPPORT

DETAIL	3
NTS	---

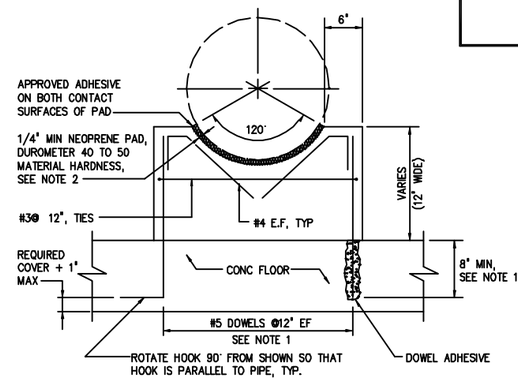

NOTES: 1 DOWELS MAY BE CAST IN WITH 90° HOOK OR ANCHORED WITH DOWEL ADHESIVE AT CONTRACTORS OPTION. WHERE FLOOR IS 8" THICK OR LESS, USE #4 DOWELS EMBEDDED TO WITHIN 2" OF BOTTOM OF FLOOR SLAB.

2 ENGINEER SHALL VERIFY THICKNESS OF PAD WILL ACCOMMODATE DESIGN MOVEMENT, PARTICULARLY FOR OUTSIDE AERIAL PIPE.

CRADLE PIPE SUPPORT

DETAIL	4
NTS	---

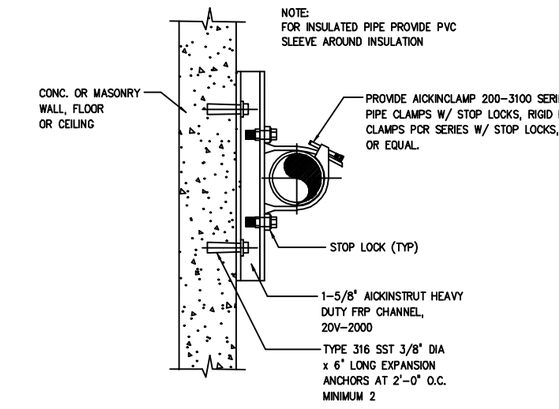

NON-METALLIC CHANNEL ON CONCRETE PIPE SUPPORT

DETAIL	5
NTS	---

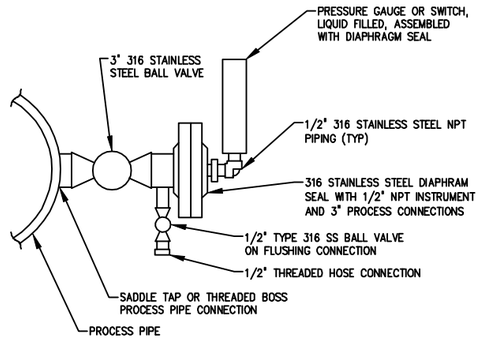

PRESSURE ELEMENT DIRECT MOUNT WITH DIAPHRAM SEAL INSTALLATION

DETAIL	6
NTS	---

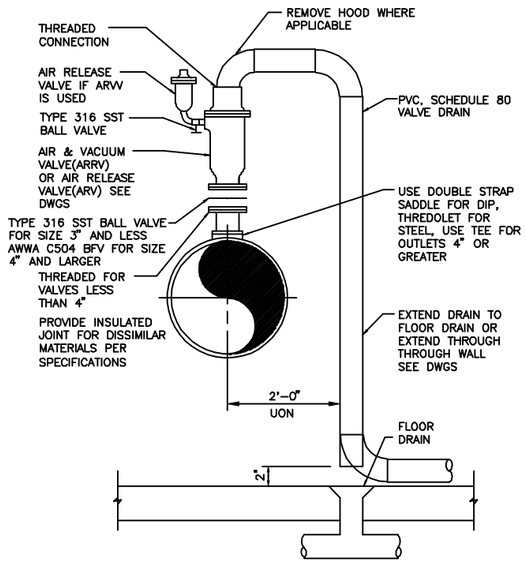

AIR RELEASE/VACUUM VALVE

DETAIL	7
NTS	---

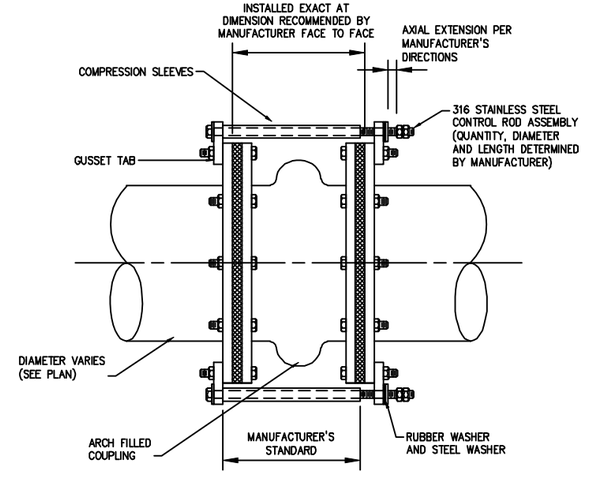

ARCH FILLED FLEXIBLE EXPANSION JOINT WITH CONTROL RODS

DETAIL	8
NTS	---

JACOB L. PORTER, P.E. #65453
HAZEN AND SAWYER, P.C.
10002 PRINCESS PALM AVE, SUITE 200
TAMPA, FL 33619, (813)630-4498

No.	DATE	REVISIONS
3		
2	JULY 2013	FINAL DRAWINGS
1	MAY 2013	90% SUBMITTAL

DES: JLP
DRN: SMZ
CKD: DBS
DATE: JULY 2013

CITY of TAMPA
WASTEWATER DEPARTMENT
HOWARD F CURREN AWTP

GRAVITY THICKENER & SLUDGE PUMP REPLACEMENT
MISCELLANEOUS MECHANICAL DETAILS

W.O. 8
SHEET 10 OF 14

User: szagurski Drawing Name: H:\41077-003\Mech\10 Miscellaneous Mechanical Details.dwg
Layout- Jul 17, 2013 - 10:50am

ELECTRICAL SYMBOLS AND LEGEND

EXPOSED NEW CONDUIT

EXPOSED EXISTING CONDUIT

CONDUIT RUN – CHANGE IN ELEVATION

J — JUNCTION BOX OR FITTING

POLE MOUNTED LIGHT FIXTURE

120V DUPLEX RECEPTACLE, NEMA
CONFIGURATION 5–20R, CONDUIT BOX MOUNTED
WEATHERPROOF, GROUND FAULT CIRCUIT INTERRUPTER

E — MOTORIZED VALVE ACTUATOR

PS — PRESSURE SWITCH

S — SOLENOID VALVE

LOCAL CONTROL STATION – NEMA 4X, SST; SEE PLANS FOR
TYPE AND NUMBER OF SWITCHES/PUSHBUTTONS REQUIRED

ELECTRICAL NOTES

1. SCOPE OF WORK FOR ELECTRICAL IS TO INSTALL NEW CONDUIT AND ELECTRICAL DEVICES IN EACH OF TWO EXISTING SLUDGE THICKENER TANKS AND IN AND AROUND THE EXISTING THICKENED SLUDGE PUMPS IN THE LOWER LEVEL OF EACH THICKENER.
2. NEW ELECTRICAL DEVICES TO BE REPLACED INCLUDE NEW LIGHT FIXTURES AND POLES ON THE THICKENER TANKS, ALONG WITH NEW RECEPTACLES ON THE TANKS IN PLACE OF THE EXISTING DEVICES.
3. ALL NEW CONDUIT, CONDULETS, AND JUNCTION BOXES SHALL BE PVC COATED ALUMINUM CONDUIT IN OUTDOOR LOCATIONS AND ALUMINUM CONDUIT FOR INDOOR LOCATIONS.
4. NEW CONTROL STATIONS SHALL MATCH THE TYPE OF CONTROLS THAT ALREADY EXIST AND ALL FUNCTIONS OF LOCAL CONTROLS SHALL BE RESTORED AFTER CONDUIT AND DEVICE REPLACEMENT.
5. CONTRACTOR SHALL FURNISH AND INSTALL REPLACEMENT THICKENER DRIVES AND TORQUE SWITCHES TO MATCH EXISTING. ELECTRICAL SUBCONTRACTOR SHALL TERMINATE EXISTING POWER AND CONTROL WIRES TO NEW DEVICES AS WAS CONNECTED TO ORIGINAL DEVICES.
6. CONTRACTOR SHALL FURNISH AND INSTALL REPLACEMENT THICKENED SLUDGE PUMP MOTORS AS SPECIFIED. PUMPS AND MOTORS WILL NOT BE THE SAME AS EXISTING. ELECTRICAL SUBCONTRACTOR SHALL TERMINATE EXISTING POWER CABLES FROM EXISTING VFD'S, ADJUSTING FOR LOCATION OF NEW MOTOR POWER TERMINALS.
7. CONTRACTOR SHALL FURNISH AND INSTALL REPLACEMENT THICKENED SLUDGE FLOW METERS AND TRANSMITTERS MOUNTING NEW DEVICES IN PLACE OF EXISTING. ELECTRICAL SUBCONTRACTOR SHALL REPLACE EXISTING SURGE DEVICES USING CITY'S LATEST STANDARDS FOR 120V POWER AND 4–20mA SIGNAL WIRING WITHIN A NEW JUNCTION BOX AT THE TRANSMITTER AND RECONNECT EXISTING POWER AND SIGNAL CABLES TO THE SURGE DEVICES WITH NEW CABLE TO THE TRANSMITTER.
8. ELECTRICAL SUBCONTRACTOR SHALL REPLACE THE CONDUIT RUN BETWEEN EACH FLOW METER AND THE ASSOCIATED FLOW TRANSMITTER AND INSTALL AND TERMINATE THE MANUFACTURER'S CABLE AT BOTH ENDS. TERMINATIONS AND ALL GROUNDING REQUIREMENTS SHALL BE PROVIDED AND INSTALLED PER THE FLOW METER MANUFACTURER'S RECOMMENDATIONS.
9. CONTRACTOR SHALL FURNISH AND INSTALL THE MOTORIZED VALVE ACTUATOR WHICH IS TO BE SUPPLIED WITH THE VALVE. EXISTING SOLENOIDS AND PRESSURE SWITCHES SHALL BE REUSED.
10. EXISTING WIRING TO THE AFFECTED DEVICES WHEN REPLACING CONDUIT SHALL BE PULLED BACK TO THE NEAREST CONDULET, PULL BOX, OR PANEL OUTSIDE THE LIMITS OF REPLACED CONDUIT. ONCE THE NEW CONDUIT IS INSTALLED IN PLACE OF THE EXISTING CONDUIT, THE EXISTING WIRING SHALL BE RE–PULLED THROUGH THE NEW CONDUIT AND TERMINATED AT THE NEW OR REPLACED DEVICES.
11. PRIOR TO DISCONNECTING ANY WIRING, TEST ALL FUNCTIONS OF THE AFFECTED DEVICE IN THE PRESENCE OF A CITY REPRESENTATIVE TO VERIFY ALL FUNCTIONS OF THAT DEVICE ARE FUNCTIONAL AS INTENDED. RECORD THE DATE, TIME, WITNESSES, AND FUNCTIONS OBSERVED AND SUBMIT RESULTS TO THE ENGINEER.
12. AFTER RE–CONNECTING EXISTING WIRING TO EACH DEVICE, REPEAT THE SAME TESTS AS CONDUCTED PRIOR TO DISCONNECTING THE AFFECTED DEVICE TO VERIFY ALL FUNCTIONS HAVE BEEN RESTORED.RECORD THE DATE, TIME, WITNESSES, AND FUNCTIONS OBSERVED AND SUBMIT RESULTS TO THE ENGINEER.
13. EXISTING MATERIALS THAT HAVE BEEN REMOVED SHALL BE PROPERLY DISPOSED OF OFF SITE AND THE COST OF DISPOSAL SHALL BE INCLUDED IN THE CONTRACT PRICE.
14. ELECTRICAL SUBCONTRACTOR SHALL PROVIDE FOR ALL TEMPORARY POWER NEEDS REQUIRED FOR ALL CONSTRUCTION SERVICES RELATED TO THIS PROJECT FROM A CITY–APPROVED POWER SOURCE.
15. WHEN NOTED AS STAINLESS STEEL OR "SS", IT SHALL MEAN TYPE 316 STAINLESS STEEL.

DANIEL B. SCHMIDT, P.E. #40233
HAZEN AND SAWYER, P.C.
10002 PRINCESS PALM AVE, SUITE 200
TAMPA, FL 33619, (813)630–4498

No.	DATE	REVISIONS
3		
2	JULY 2013	FINAL DRAWINGS
1	MAY 2013	90% SUBMITTAL

DES: DBS
DRN: SMZ
CKD: JB
DATE: JULY 2013

CITY of TAMPA
WASTEWATER DEPARTMENT
HOWARD F CURREN AWTP

GRAVITY THICKENER & SLUDGE PUMP REPLACEMENT
ELECTRICAL SYMBOLS,
LEGEND, AND GENERAL NOTES

W.O. 8
SHEET 11 OF 14

User: szagurski Drawing Name: H:\41077–003\Elec\11 Electrical Symbols and Legend.dwg
Layout– Jul 16, 2013 – 11:53am

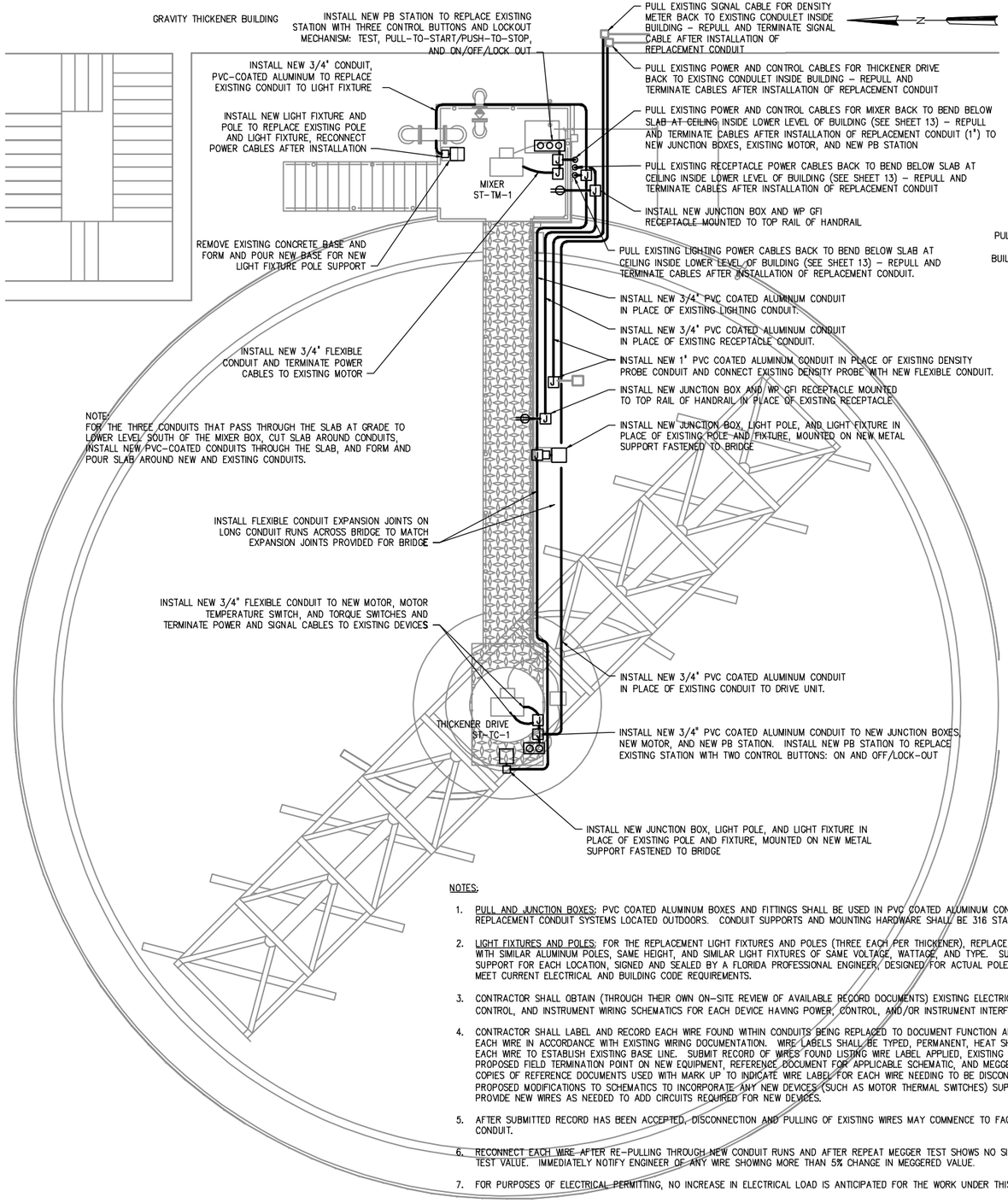

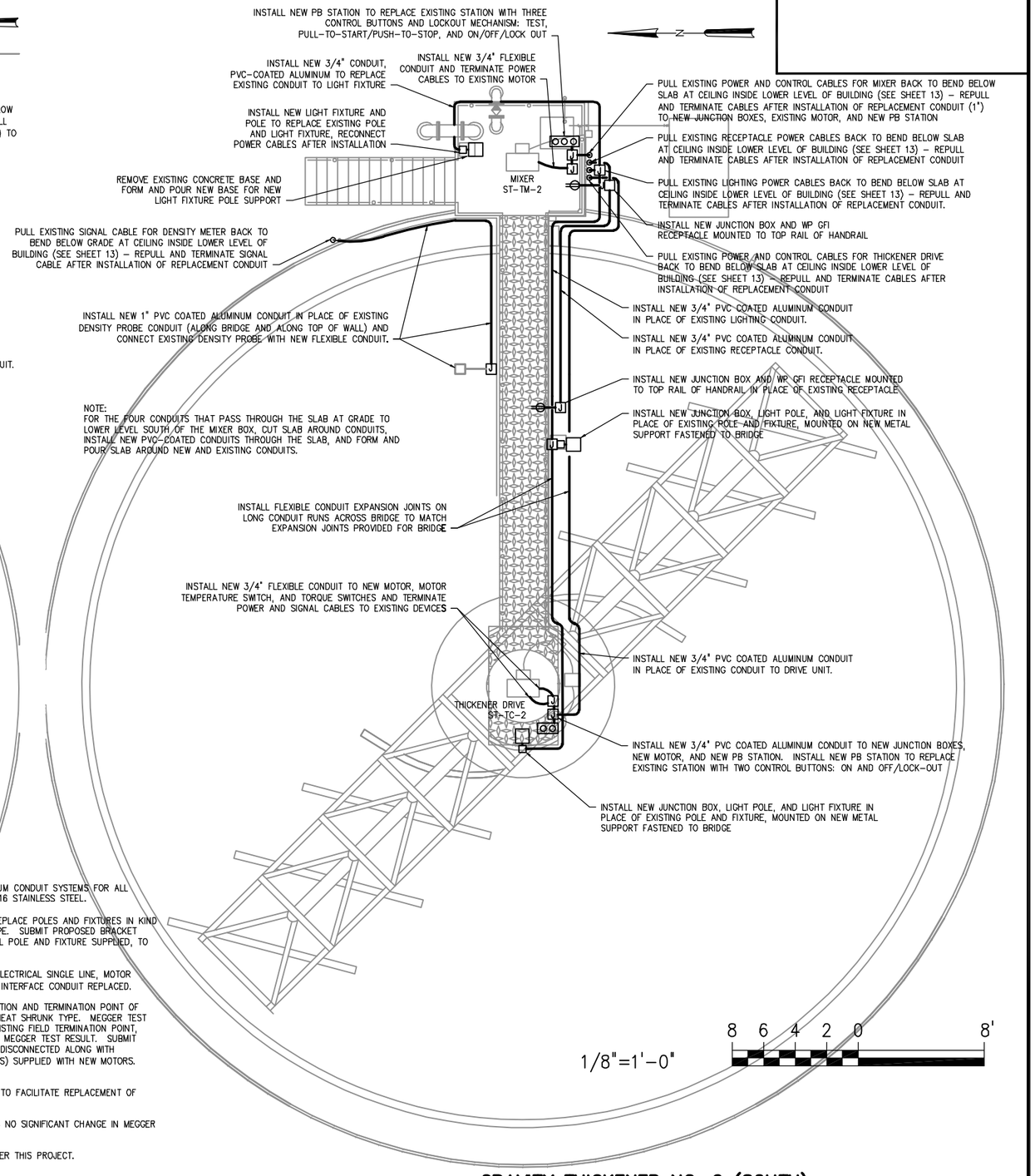

NOTES:

1. PULL AND JUNCTION BOXES: PVC COATED ALUMINUM BOXES AND FITTINGS SHALL BE USED IN PVC COATED ALUMINUM CONDUIT SYSTEMS FOR ALL REPLACEMENT CONDUIT SYSTEMS LOCATED OUTDOORS. CONDUIT SUPPORTS AND MOUNTING HARDWARE SHALL BE 316 STAINLESS STEEL.
2. LIGHT FIXTURES AND POLES: FOR THE REPLACEMENT LIGHT FIXTURES AND POLES (THREE EACH PER THICKENER), REPLACE POLES AND FIXTURES IN KIND WITH SIMILAR ALUMINUM POLES, SAME HEIGHT, AND SIMILAR LIGHT FIXTURES OF SAME VOLTAGE, WATTAGE, AND TYPE. SUBMIT PROPOSED BRACKET SUPPORT FOR EACH LOCATION, SIGNED AND SEALED BY A FLORIDA PROFESSIONAL ENGINEER, DESIGNED FOR ACTUAL POLE AND FIXTURE SUPPLIED, TO MEET CURRENT ELECTRICAL AND BUILDING CODE REQUIREMENTS.
3. CONTRACTOR SHALL OBTAIN (THROUGH THEIR OWN ON-SITE REVIEW OF AVAILABLE RECORD DOCUMENTS) EXISTING ELECTRICAL SINGLE LINE, MOTOR CONTROL, AND INSTRUMENT WIRING SCHEMATICS FOR EACH DEVICE HAVING POWER, CONTROL, AND/OR INSTRUMENT INTERFACE CONDUIT REPLACED.
4. CONTRACTOR SHALL LABEL AND RECORD EACH WIRE FOUND WITHIN CONDUITS BEING REPLACED TO DOCUMENT FUNCTION AND TERMINATION POINT OF EACH WIRE IN ACCORDANCE WITH EXISTING WIRING DOCUMENTATION. WIRE LABELS SHALL BE TYPED, PERMANENT, HEAT SHRUNK TYPE. MEGGER TEST EACH WIRE TO ESTABLISH EXISTING BASE LINE. SUBMIT RECORD OF WIRES FOUND LISTING WIRE LABEL APPLIED, EXISTING FIELD TERMINATION POINT, PROPOSED FIELD TERMINATION POINT ON NEW EQUIPMENT, REFERENCE DOCUMENT FOR APPLICABLE SCHEMATIC, AND MEGGER TEST RESULT. SUBMIT COPIES OF REFERENCE DOCUMENTS USED WITH MARK UP TO INDICATE WIRE LABEL FOR EACH WIRE NEEDING TO BE DISCONNECTED ALONG WITH PROPOSED MODIFICATIONS TO SCHEMATICS TO INCORPORATE ANY NEW DEVICES (SUCH AS MOTOR THERMAL SWITCHES) SUPPLIED WITH NEW MOTORS. PROVIDE NEW WIRES AS NEEDED TO ADD CIRCUITS REQUIRED FOR NEW DEVICES.
5. AFTER SUBMITTED RECORD HAS BEEN ACCEPTED, DISCONNECTION AND PULLING OF EXISTING WIRES MAY COMMENCE TO FACILITATE REPLACEMENT OF CONDUIT.
6. RECONNECT EACH WIRE AFTER RE-PULLING THROUGH NEW CONDUIT RUNS AND AFTER REPEAT MEGGER TEST SHOWS NO SIGNIFICANT CHANGE IN MEGGER TEST VALUE. IMMEDIATELY NOTIFY ENGINEER OF ANY WIRE SHOWING MORE THAN 5% CHANGE IN MEGGERED VALUE.
7. FOR PURPOSES OF ELECTRICAL PERMITTING, NO INCREASE IN ELECTRICAL LOAD IS ANTICIPATED FOR THE WORK UNDER THIS PROJECT.

1/8"=1'-0"

8 6 4 2 0 8'

GRAVITY THICKENER NO. 1 (NORTH)

GRAVITY THICKENER NO. 2 (SOUTH)

DANIEL B. SCHMIDT, P.E. #40233
HAZEN AND SAWYER, P.C.
10002 PRINCESS PALM AVE, SUITE 200
TAMPA, FL 33619, (813)630-4498

No.	DATE	REVISIONS
3		
2	JULY 2013	FINAL DRAWINGS
1	MAY 2013	90% SUBMITTAL

DES: DBS
DRN: SMZ
CKD: JB
DATE: JULY 2013

CITY of TAMPA
WASTEWATER DEPARTMENT
HOWARD F CURREN AWTP

GRAVITY THICKENER & SLUDGE PUMP REPLACEMENT
GRAVITY THICKENER ELECTRICAL COMPONENT REPLACEMENT

W.O. 8
SHEET 12 OF 14

User: szagurski Drawing Name: H:\41077-003\Elec\12 Gravity Thickner Electrical Improvements.dwg
Layout- Aug 23, 2013 - 1:50pm

NOTES:

1. PULL AND JUNCTION BOXES: ALUMINUM BOXES AND FITTINGS SHALL BE USED IN ALUMINUM CONDUIT SYSTEMS FOR ALL REPLACEMENT CONDUIT SYSTEMS LOCATED IN THE LOWER LEVEL OF THE GRAVITY THICKENER BUILDING. CONDUIT SUPPORTS AND MOUNTING HARDWARE SHALL BE 316 STAINLESS STEEL.
2. REMOVE AND REPLACE ALL EXISTING POWER AND CONTROL DEVICES, INCLUDING PB STATIONS, DISCONNECTS, SOLENOID VALVES, PRESSURE SWITCHES, JUNCTION BOXES, AND CONDUITS THAT ARE ASSOCIATED WITH THE TWO PUMPS AND FOUR VALVES BEING REPLACED UNDER THIS PROJECT. INSTALL NEW CONDUITS AND DEVICES AS NOTED.
3. CONTRACTOR SHALL OBTAIN (THROUGH THEIR OWN ON-SITE REVIEW OF AVAILABLE RECORD DOCUMENTS) EXISTING ELECTRICAL SINGLE LINE, MOTOR CONTROL, AND INSTRUMENT WIRING SCHEMATICS FOR EACH DEVICE HAVING POWER, CONTROL, AND/OR INSTRUMENT INTERFACE CONDUIT REPLACED.
4. CONTRACTOR SHALL LABEL AND RECORD EACH WIRE FOUND WITHIN CONDUITS BEING REPLACED TO DOCUMENT FUNCTION AND TERMINATION POINT OF EACH WIRE IN ACCORDANCE WITH EXISTING WIRING DOCUMENTATION. WIRE LABELS SHALL BE TYPED, PERMANENT, HEAT SHRUNK TYPE. MEGGER TEST EACH WIRE TO ESTABLISH EXISTING BASE LINE. SUBMIT RECORD OF WIRES FOUND LISTING WIRE LABEL APPLIED, EXISTING FIELD TERMINATION POINT, PROPOSED FIELD TERMINATION POINT ON NEW EQUIPMENT, REFERENCE DOCUMENT FOR APPLICABLE SCHEMATIC, AND MEGGER TEST RESULT. SUBMIT COPIES OF REFERENCE DOCUMENTS USED WITH MARK UP TO INDICATE WIRE LABEL FOR EACH WIRE NEEDING TO BE DISCONNECTED ALONG WITH PROPOSED MODIFICATIONS TO SCHEMATICS TO INCORPORATE ANY NEW DEVICES (SUCH AS MOTOR THERMAL SWITCHES) SUPPLIED WITH NEW MOTORS. PROVIDE NEW WIRES AS NEEDED TO ADD CIRCUITS REQUIRED FOR NEW DEVICES.
5. AFTER SUBMITTED RECORD HAS BEEN ACCEPTED, DISCONNECTION AND PULLING OF EXISTING WIRES MAY COMMENCE TO FACILITATE REPLACEMENT OF CONDUIT.
6. RECONNECT EACH WIRE AFTER RE-PULLING THROUGH NEW CONDUIT RUNS AND AFTER REPEAT MEGGER TEST SHOWS NO SIGNIFICANT CHANGE IN MEGGER TEST VALUE. IMMEDIATELY NOTIFY ENGINEER OF ANY WIRE SHOWING MORE THAN 5% CHANGE IN MEGGERED VALUE.
7. FOR PURPOSES OF ELECTRICAL PERMITTING, NO INCREASE IN ELECTRICAL LOAD IS ANTICIPATED FOR THE WORK UNDER THIS PROJECT.

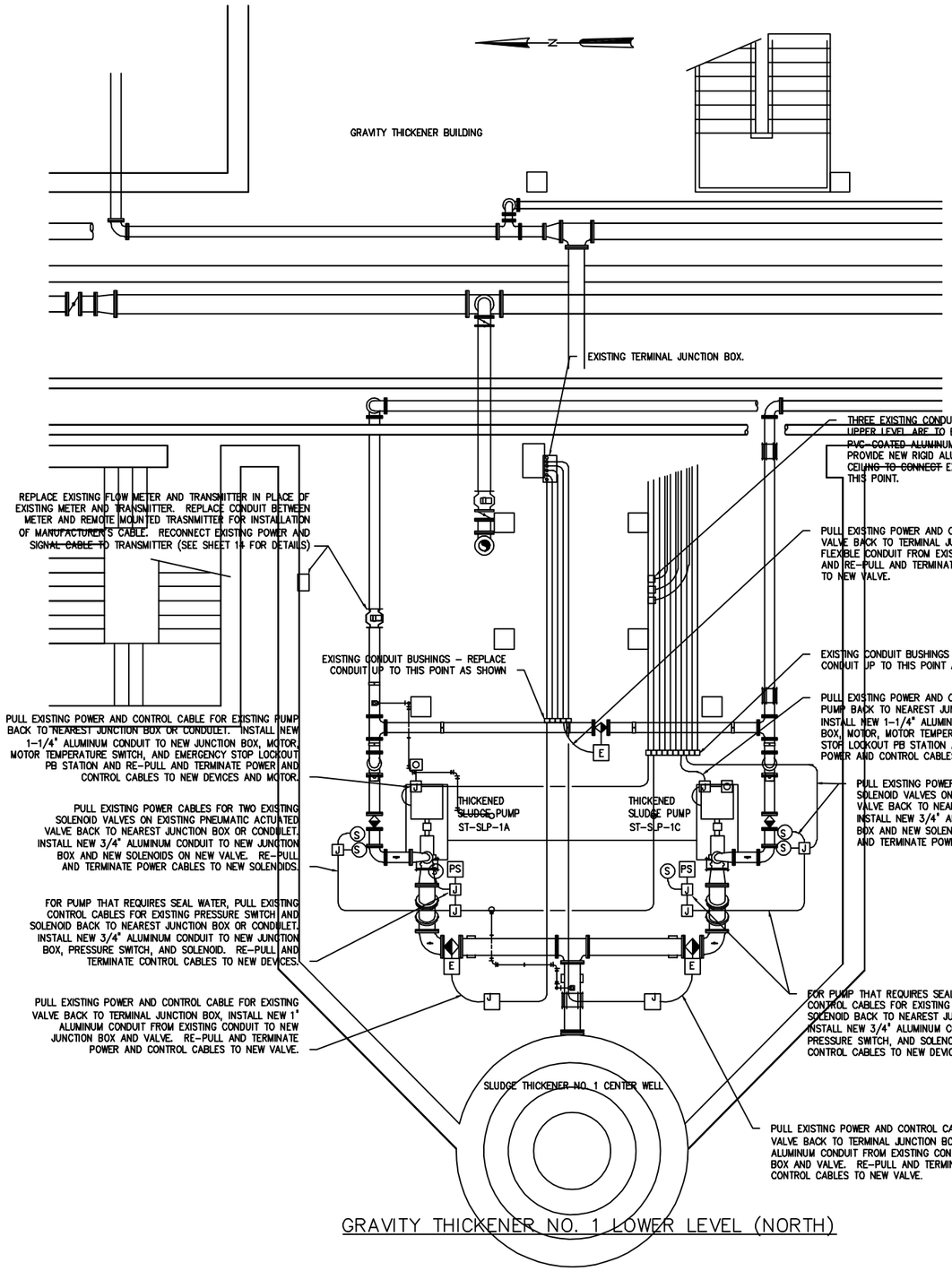

GRAVITY THICKENER NO. 1 LOWER LEVEL (NORTH)

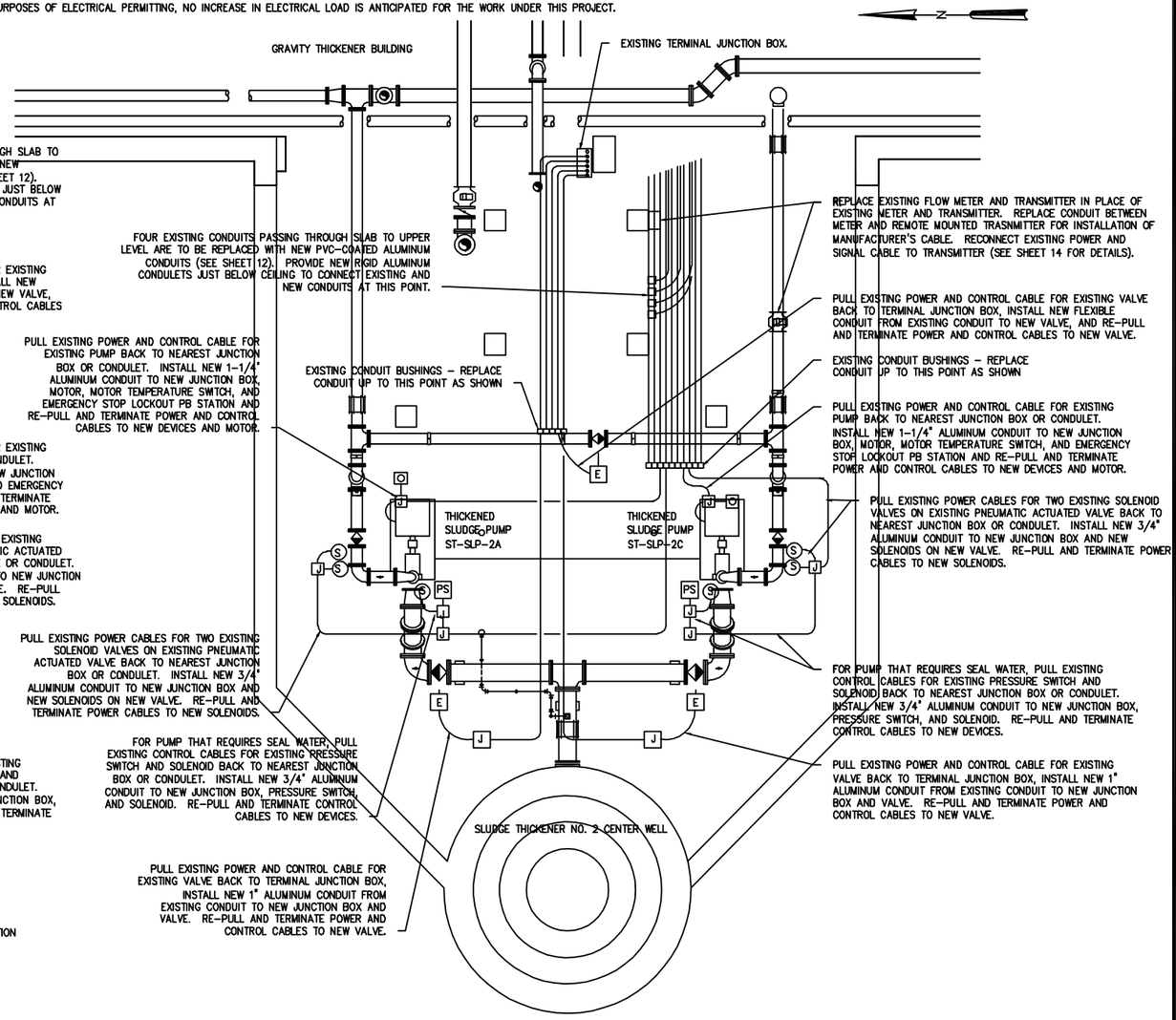

GRAVITY THICKENER NO. 2 LOWER LEVEL (SOUTH)

No.	DATE	REVISIONS
3		
2	JULY 2013	FINAL DRAWINGS
1	MAY 2013	90% SUBMITTAL

DANIEL B. SCHMIDT, P.E. #40233
HAZEN AND SAWYER, P.C.
10002 PRINCESS PALM AVE, SUITE 200
TAMPA, FL 33619, (813)630-4498

DES: DBS
DRN: SMZ
CKD: JB
DATE: JULY 2013

CITY of TAMPA
WASTEWATER DEPARTMENT
HOWARD F CURREN AWTP

GRAVITY THICKENER & SLUDGE PUMP REPLACEMENT
THICKENED SLUDGE PUMPS ELECTRICAL COMPONENT REPLACEMENT

W.O. 8
SHEET 13 OF 14

User: szagurski Drawing Name: H:\41077-003\Elec\13 Thickend Sludge Pumps Electrical Improvments.dwg
Layout- Jul 17, 2013 - 10:48am

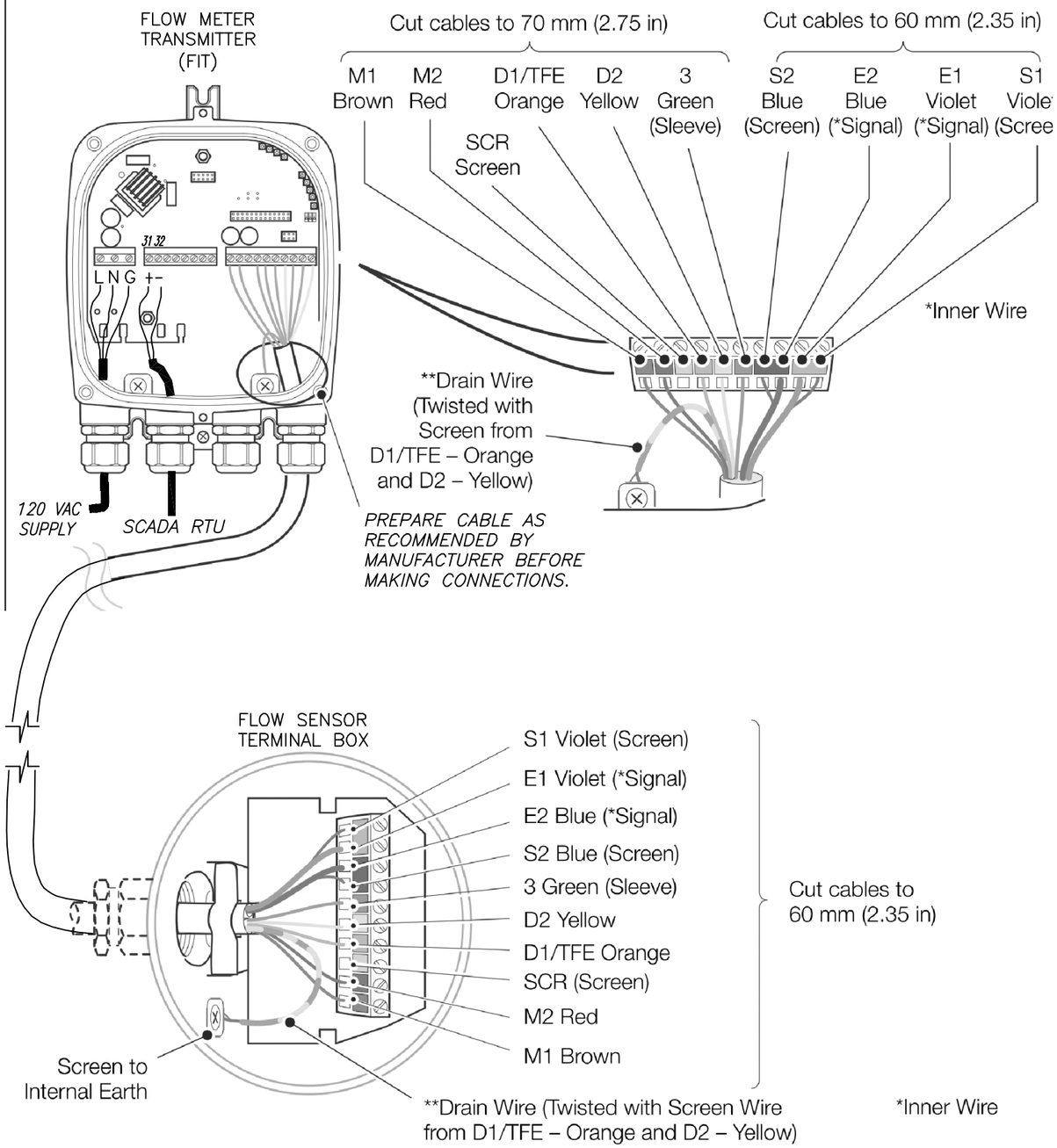

FLOW METER INTERCONNECTIONS

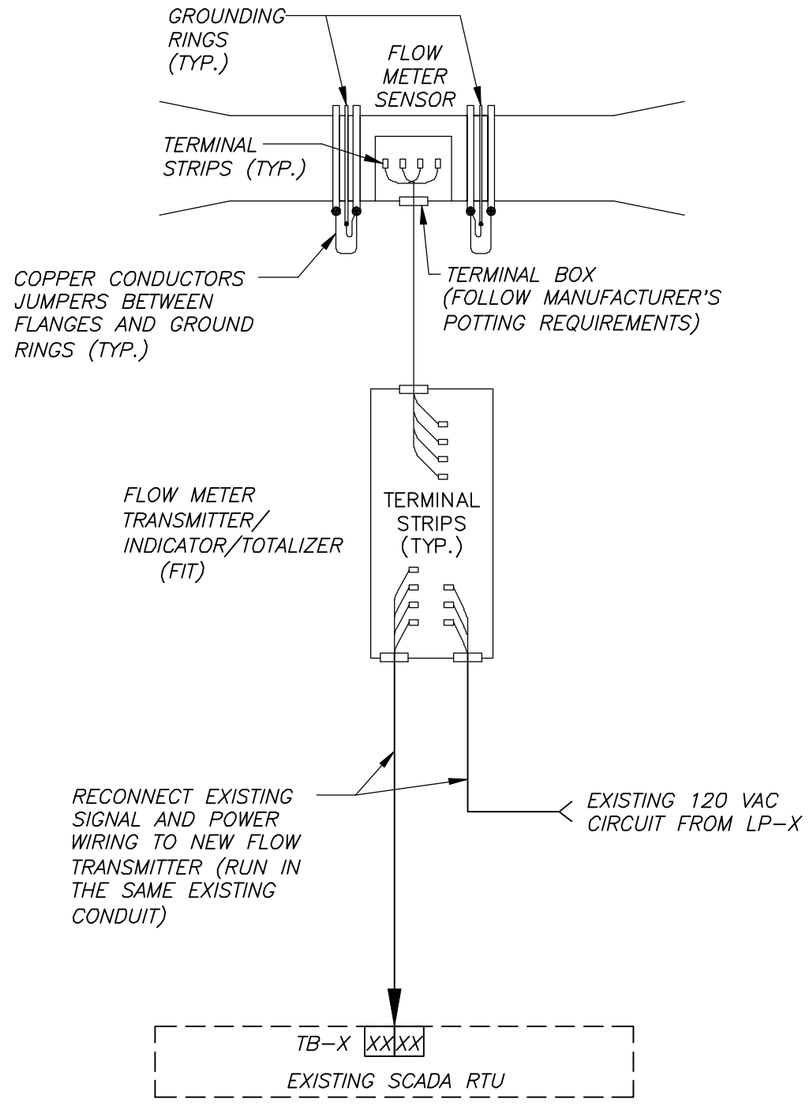

FLOW METER INSTRUMENTATION ONE-LINE

No.	DATE	REVISIONS
3		
2	JULY 2013	FINAL DRAWINGS
1	MAY 2013	90% SUBMITTAL

DANIEL B. FORTNER, P.E. #[illegible]
HAZEN AND SAWYER, P.C.
10002 PRINCESS PALM AVE, SUITE 200
TAMPA, FL 33619, (813)630-4498

DES:
DRN:
CKD:
DATE: JULY 2013

CITY of TAMPA
WASTEWATER DEPARTMENT
HOWARD F CURREN AWTP

GRAVITY THICKENER & SLUDGE PUMP REPLACEMENT
TYPICAL FLOW METER INTERFACE
WIRING SCHEMATIC

W.O. 8
SHEET 14 OF 14

User: szagurski Drawing Name: H:\41077-003\Elec\14 Flow Meter Wiring Schematic - E3-Flow Meter PDF.dwg
Layout- Jul 17, 2013 - 10:49am