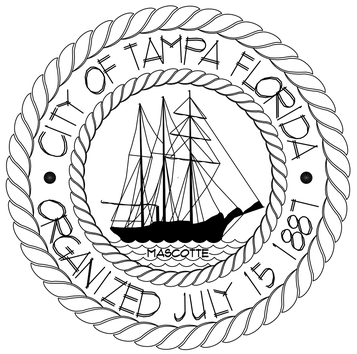

FIRE STATION 23

17-C-00037

K:\CA\Kenney & Design Division\Kenny\- James Jackson\FIRE\DEPT\FIRE STATION 23 17-C-00037\FIRE STATION 23 17-C-00037 constr. docs\- fire 23 cover.dwg, 8/1/2017 8:22:07 AM, Adobe PDF (temporary).pc3

CONSULTANTS

CIVIL
5 M CIVIL LLC
JESUS MERLY, P.E. MANAGER
12315 WYCLIFF PLACE
TAMPA, FL 33626
PHONE 813 404-8872 OFFICE
FAX 813 852-6320

LANDSCAPE
DAVID CONNER & ASSOCIATES
CONTACT
1509 W. SWANN AVENUE SUITE 255
TAMPA, FL 33606
PHONE (813) 258-1997
FAX

STRUCTURAL
BILLER REINHART
STRUCTURAL GROUP, INC.
CONTACT
4014 GUNN HWY. SUITE 248
TAMPA, FL 33713
PHONE
FAX

MECHANICAL, ELECTRICAL, PLUMBING
GRINER, ENGINEERING, INC.
CONTACT
1628 1st. AVENUE NORTH
ST. PETERSBURG, FL 33713
PHONE
FAX

SYMBOLS

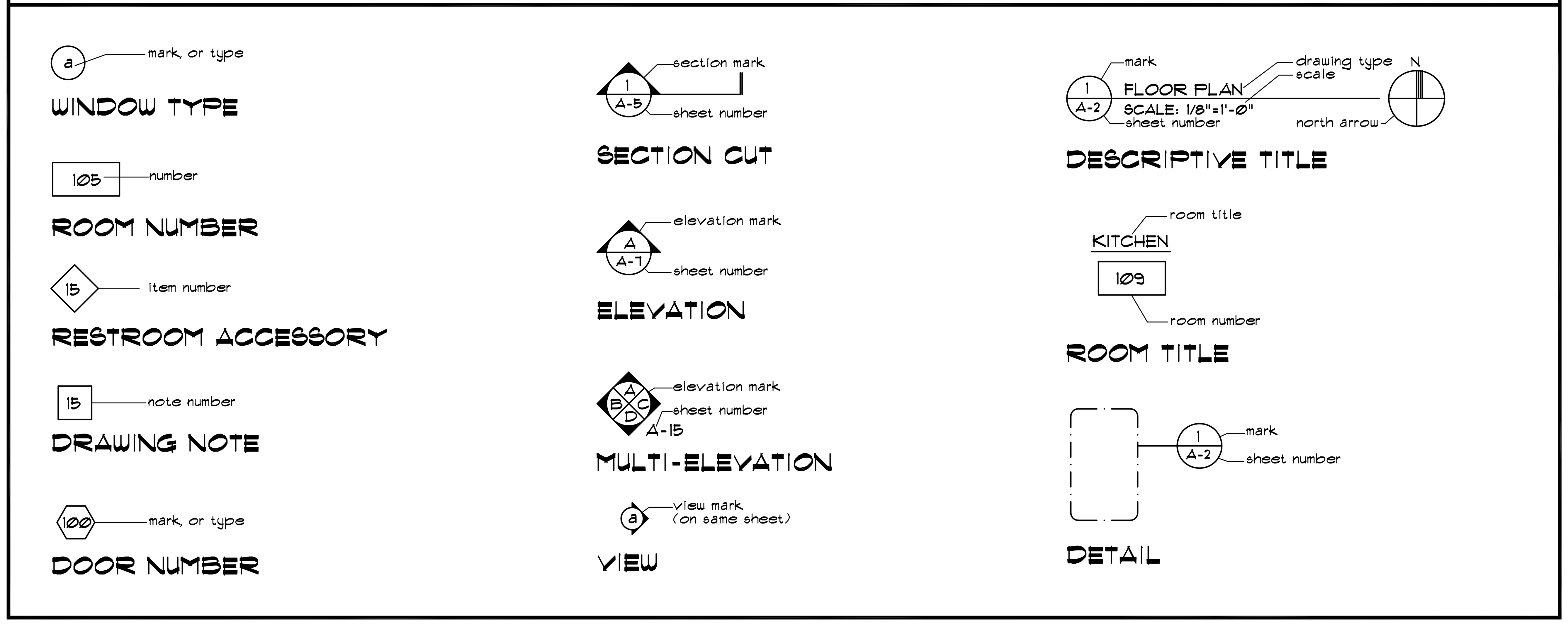

ARCHITECT

JAMES E. JACKSON JR., AIA, NOMA, CITY ARCHITECT
DPR #15839
306 E. JACKSON ST. 4N
TAMPA, FL 33602
PHONE: (813) 274-8773
FAX: 274-8080
EMAIL: PW61 @ CI. TAMPA. FL. US

INDEX

G-1 COVER SHEET
GENERAL INFORMATION

GENERAL
G-1 COVER SHEET
G-2 CONSTRUCTION NOTES, LEGENDS AND SYMBOLOGY
G-3 EXISTING CONDITIONS / DEMOLITION PLAN

CIVIL
C-1 MASTER SITE PLAN
C-2 PAVING, GRADING AND DRAINAGE PLAN
C-3 UTILITY SERVICE PLAN

CIVIL DETAILS
CD-1 PGD DETAILS
CD-2 WASTEWATER DETAILS
CD-3 WASTWWATER DETAILS
CD-4 LIFT STATION DETAILS
CD-5 WATER DETAILS
CD-6 WATER DETAILS

LANDSCAPING
LA-002 TREE PRESERVATION, PROTECTION AND REMOVAL PLAN
LA-300 PLANTING DETAILS
LA-301 PLANTING NOTES AND DETAILS
LA-400 IRRIGATION PLANS
LA-401 IRRIGATION NOTES AND DETAILS

STRUCTURAL
S-1.1 GENERAL NOTES
S-2.0 FOUNDATION PLAN
S-2.1 ROOF FRAMING DETAILS
S-3.0 SECTIONS AND DETAILS
S-3.1 SECTIONS AND DETAILS
S-3.2 SECTIONS AND DETAILS
S-3.3 SECTIONS AND DETAILS

ARCHITECTURAL
A-1.1 ARCHITECTURAL SITE PLAN
A-2.1 INFORMATIONAL FLOOR PLAN / PARTITION TYPES
A-2.2 DIMENSIONAL FLOOR PLAN
A-3.1 ROOF PLAN & DETAILS
A-4.1 REFLECTED CEILING PLAN & DETAILS
A-5.1 EXTERIOR ELEVATIONS
A-6.1 WALL SECTIONS
A-6.2 WALL SECTIONS
A-6.3 WALL SECTIONS
A-7.1 ENLARGED FLOOR PLAN
A-8.1 SCHEDULES & DETAILS
A-9.1 STOREFRONT ELEVATIONS AND DETAILS
A-10.1 INTERIOR ELEVATIONS

ELECTRICAL
E-0.1 ELECTRICAL COVER SHEET, LEGEND, GENERAL NOTES & ABBREVIATIONS
E-1.1 ELECTRICAL SITE PLAN
E-1.2 ELECTRICAL SITE PHOTOMETRIC PLAN
E-2.1 ELECTRICAL LIGHTING PLAN
E-2.2 ELECTRICAL POWER PLAN
E-2.3 ELECTRICAL LV SYSTEM PLAN
E-2.4 ELECTRICAL HVAC PLAN
E-2.5 ELECTRICAL ROOF PLAN
E-3.1 ELECTRICAL RISER DIAGRAM
E-3.2 ELECTRICAL PANEL SCHEDULE
E-4.1 ELECTRICAL DETAILS
E-4.2 ELECTRICAL DETAILS
E-4.3 ELECTRICAL DETAILS
E-4.4 ELECTRICAL DETAILS
E-4.5 GENERATOR DETAILS
E-5.1 ELECTRICAL LIGHTING FIXTURE SCHEDULE AND CONTROL PANEL DETAILS
E-5.2 ELECTRICAL LIGHTING SYSTEM RISER AND DETAILS
E-5.3 ELECTRICAL LIGHTING CONTROL SCHEDULE
E-6.1 FIRE ALARM RISER DIAGRAM
E-6.2 FIRE ALARM DETAILS

MECHANICAL
M-1.0 MECHANICAL COVER SHEET - LEGENDS & HVAC GENERAL NOTES
M-2.0 OVERALLMECHANICAL PLAN
M-3.0 MECHANICAL ROOF PLAN
M-4.0 ENLARGED MECH. PLAN - SLEEPING QUARTERS / ACTIVITY AREA
M-4.1 ENLARGED MECH. PLAN - APPARATUS BAY
M-5.0 MECHANICAL SCHEDULES
M-5.1 MECHANICAL SCHEDULES
M-6.0 MECHANICAL DETAILS
M-6.1 MECHANICAL DETAILS
M-6.2 MECHANICAL DETAILS
M-6.3 MECHANICAL SCHEMATICS
M-6.4 MECHANICAL SCHEMATICS
M-7.0 MECHANICAL SPECIFICATIONS
M-7.1 MECHANICAL SPECIFICATIONS
M-7.2 MECHANICAL SPECIFICATIONS
M-7.3 MECHANICAL SPECIFICATIONS

PLUMBING
P-1.0 PLUMBING COVER SHEET - LEGENDS & GENERAL NOTES
P-2.0 PLUMBING SITE PLAN
P-3.0 OVERALL PLUMBING SUPPLY & SANITARY PLANS
P-3.1 ROOF PLAN & GAS PIPING PLAN
P-4.0 ENLARGED PARTIAL SUPPLY PLANS
P-4.1 ENLARGED PARTIAL PLUMBING SANITARY PLAN
P-5.0 PLUMBING SCHEDULES
P-6.0 SUPPLY RISER
P-6.1 SANITARY RISER
P-6.2 GAS RISER
P-7.0 PLUMBING DETAILS
P-7.1 PLUMBING DETAILS
P-8.0 PLUMBING SPECIFICATIONS

FIRE PROTECTION
FP-1.0 FIRE PROTECTION DRAWING INDEX, GENERAL NOTES, LEGENDS AND FLOW AND PRESSURE TEST DATA
FP-2.0 FIRE PROTECTION SITE PLAN
FP-3.0 FIRE PROTECTION FLOOR PLAN
FP-3.1 FIRE PROTECTION ATTIC PLAN
FP-4.0 FIRE PROTECTION DETAILS
FP-5.0 FIRE PROTECTION SPECIFICATION

ABBREVIATIONS

AFF	above finished floor
ADJT	adjustable
A/C	air conditioning
ALT	alternate
AB	anchor bolt
BM	beam
BIT	bituminous
BLKG	blocking
BUR	built up roofing
CIPC	cast-in-place concrete
CLG	ceiling
CT	ceramic tile
CLR	clearance
COL	column
CON	concrete
CMT	ceramic mosaic tile
CMU	concrete masonry unit
CONT	continuous or continue
CJT	control joint
DP	dampproofing
DL	dead load
DET	detail
DIA	diameter
DIM	dimension
DR	door
DS	downspout
DWG	drawing
DF	drinking fountain
ELEC	electrical
EWC	electrical water cooler
EL	elevation
EQ	equal
EXIST	existing
EXPJT	expansion joint
EXT	exterior
FFE	finished floor elevation
FFL	finished floor line
FLG	flashing
FLR	flooring
FD	floor drain
FTG	footing
FOB	furnished by others
GA	gage, gauge
GALV	galvanized
GC	general contractor
GL	glass, glazing
GB	grab bar
GYPDWL	gypsum dry wall
HH	handhole
HDW	hardware
HT	height
HC	hollow core
HB	hose bibb

INSUL	insulate (d), (ion)
JT	joint
JST	joist
LAV	lavatory
LTL	lintel
MH	manhole
MO	masonry opening
MECH	mechanical
MET	metal
MOD	modular
NOM	nominal
NIC	not in contract
NTS	not to scale
PLAS	plaster
PT	pressure
PVC	polyvinyl chloride
PTC	post-tension concrete
PCF	pounds per cubic feet
PFL	pounds per linesl foot
PSF	pounds per square foot
PSI	pounds per square inch
PCC	precast concrete
PL	property line
RAD	radius
RVT	reinforced vinyl title
REF	reference
RA	return air
RD	roof drain
RFG	roofing
RO	rough opening
SS	service sink
SIM	similar
SC	solid core
SPEC	specification(s)
SQ	square
SS	stainless steel
STL	steel
STR	structural
TBR	to be removed
TEL	telephone
THK	thick(ness)
T&G	tongue & groove
UNO	unless noted otherwise
VB	vapor barrier
VERT	vertical
VAT	vinyl asbestos title
VB	vinyl base
WC	water closet
WH	water heater
WP	water proofing
WD	wood

PROJECT NOTES

1 ALL CONSTRUCTION SHALL COMPLY WITH APPLICABLE CODES AND STANDARDS, INCLUDING BUT NOT LIMITED TO ALL STATE LAWS, LOCAL ORDINANCES, UTILITY COMPANY, FLORIDA ACCESSIBILITY CODE FOR BUILDING CONSTRUCTION, THE STANDARD MECHANICAL CODE, THE STANDARD PLUMBING CODE, THE OCCUPATIONAL SAFETY AND HEALTH ACT, NFPA AND THE CURRENTLY ADOPTED STANDARD BUILDING CODE.

2 CONTRACTOR SHALL REMOVE ALL DEBRIS FROM THE PROJECT SITE AS REQUIRED TO MAINTAIN A SAFE AND ORDERLY WORK ENVIRONMENT.

3 GENERAL CONTRACTOR SHALL VERIFY ALL DIMENSIONS AND EXISTING CONDITIONS PRIOR TO AND DURING CONSTRUCTION.

4 DEMOLITION WORK SHALL NOT BE LIMITED TO THESE DOCUMENTS TO COMPLETE PROJECT AS ILLUSTRATED, REMOVE ITEMS NECESSARY TO ALLOW FOR NEW CONSTRUCTION.

5 EXISTING SURFACES (WALLS, CEILINGS, ETC.) SHALL BE PROTECTED DURING CONSTRUCTION. THE CONTRACTOR SHALL CLEAN SURFACES AFTER CONSTRUCTION. REPAIR, PAINT AND OR REPLACE AREAS DAMAGED AS A RESULT OF PERFORMANCE OF THE WORK.

6 ALL WORK SHALL BE COORDINATED WITH THE CITY OF TAMPA'S ARCHITECTURAL REPRESENTATIVE.

7 THE CONTRACTOR SHALL SECURE ALL OPENINGS UNDER CONSTRUCTION AT THE END OF EACH WORKING DAY.

8 ITEMS OR AREAS DAMAGED BY THE CONTRACTOR OR SUBCONTRACTORS SHALL BE REPAIRED OR REPLACED AT THE CONTRACTOR'S EXPENSE.

9 CONTRACTOR SHALL PROVIDE DEAD WOOD BLOCKING FOR ALL WALL CABINETS, WOOD BASES, CHAIR RAILS, CROWN MOULDINGS, AND ANY OTHER ITEMS THAT REQUIRE BLOCKING FOR PROPER ANCHORING.

PROJECT NOTES

FIRM NOTE

COMMUNITY-PANEL NUMBER
201005.00W

FLOOD ZONE - X

CODE REFERENCES

CLASSIFICATION:
- OCCUPANCY: GROUP R, DORMITORY IIIB

CONSTRUCTION TYPE:
- TYPE III A, SPRINKLERED

EXIT REQUIREMENTS:
- MINIMUM CORRIDOR WIDTH - 44"
- MAXIMUM TRAVEL DISTANCE - 200 FT.
- COMMON PATH OF TRAVEL - 75 FT.
- DEAD END CORRIDOR - 20 FT.

FIRE RATING/CONSTRUCTION OF:
- INTERIOR BEARING WALLS - NC
- ROOF & ROOF/CEILING - NC
- FLOOR - NC

INTERIOR FINISHES:
- ALL SPACES: CLASS "C" MATERIALS MINIMUM
- FLAME SPREAD: 76 - 200
- SMOKE DEVELOPED: 0 - 450

TO THE BEST OF OUR KNOWLEDGE, INFORMATION AND BELIEF, THESE DOCUMENTS COMPLY WITH CURRENTLY ADOPTED CODES.

ALL PROPOSED CONSTRUCTION SHALL COMPLY WITH CURRENTLY ADOPTED CODES, STANDARDS AND ACTS, WHICH INCLUDE, BUT ARE NOT LIMITED TO:
- FLORIDA FIRE PREVENTION CODE 2010.
- FLORIDA BUILDING CODE 2010
- FLORIDA STATUTE #633, WHICH INCLUDES:
- STATE FIRE MARSHALL'S RULES AND REGULATIONS
- NATIONAL ELECTRICAL CODE, 2008
- NFPA# 13, INSTALLATION OF SPRINKLER SYSTEMS.
- NFPA# 20, INSTALLATION OF SECONDARY PUMPS.
- NFPA# 24, PRIVATE FIRE SERVICE MAINS.
- NFPA# 90A, INSTALLATION OF AIR-CONDITIONING AND VENTILATION SYSTEMS, 1996
- NFPA# 1 & 101 (2009)

WIND SPEED : 151 MPH
EXPOSURE CATAGORY - 'B'
IMPORTANCE FACTOR - 1.15
BUILDING CATEGORY - IV

SEE STRUCTURAL DRAWINGS FOR INFORMATION

APPROVED PRODUCTS LIST

PRODUCT CATEGORY	SUB CATEGORY	MANUFACTURER	APPROVAL NO.	EXP. DATE
PANEL WALLS	SOFFITS	PETERSON ALUMINUM CORP.	FL4483-R5	8/1/2013
PANEL WALLS	WALL LOUVER	GREENHECK FAN CORP.	FL10088.1	7/17/2013
WINDOWS	STOREFRONT	KAWNEER COMPANY, INC.	FL7359-R4	3/5/2013
ROOFING	METAL ROOF	TAMKO ROOFING PRODUCTS	FL3901-R5	6/11/2013
DOORS	METAL ENTRANCE	STEELCRAFT / INGERSOL	FL12400-R2	1/18 2013
WINDOWS	PROJECTED	EFCO-2700 SERIES	FL12912-R2	12/13/2014
DOORS	SECTIONAL OVERHEAD DOOR	CLOPAY	FL16107	12/1/2014

LOCATION MAP

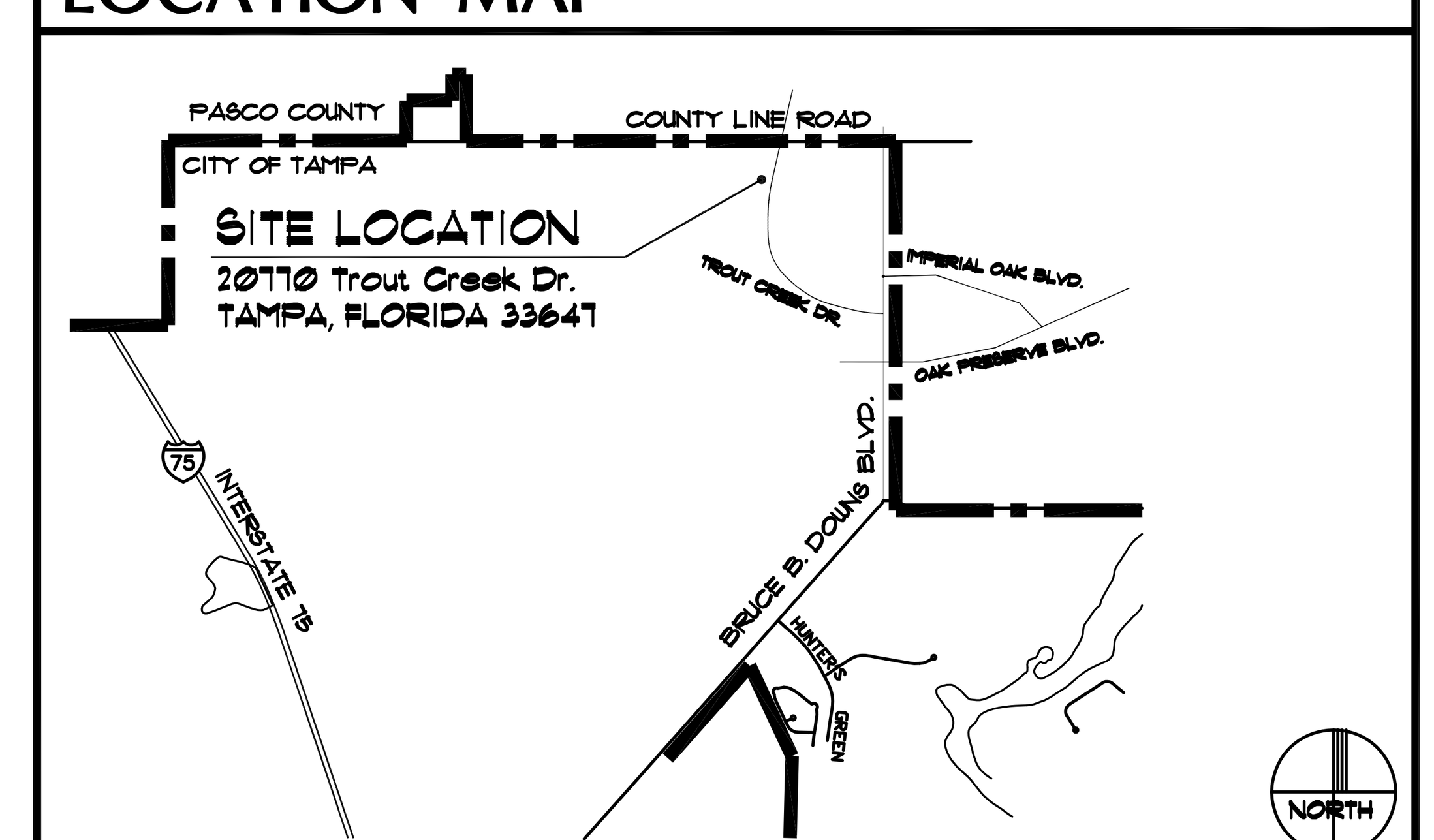

LEGAL DESCRIPTION

SEC 01, T27S, R19E
ATLAS SHT. No. GG-19
FOLIO : 32901.0606
ZONING : PD-A

SQUARE FOOTAGE

1,291 SQUARE FEET TRAINING
9,305 SQUARE FEET STATION
10,596 SQUARE FEET TOTAL

SHEET NUMBER
G - 1

K:\CA\Planning & Design Division\kinsey\~James Jackson\FIREDEPT\FIRE STATION 23 17-C-00037\FIRE STATION 23 17-C-00037 constr. docs\~fire 23 g-1.dwg, 8/1/2017 8:27:49 AM, Adobe PDF (temporary).pc3

FIRE STATION 23

CONSTRUCTION PLANS

FINAL PLANS

June 30, 2017

PROJECT LOCATION
20770 TROUT CREEK DR
TAMPA, FL 33647

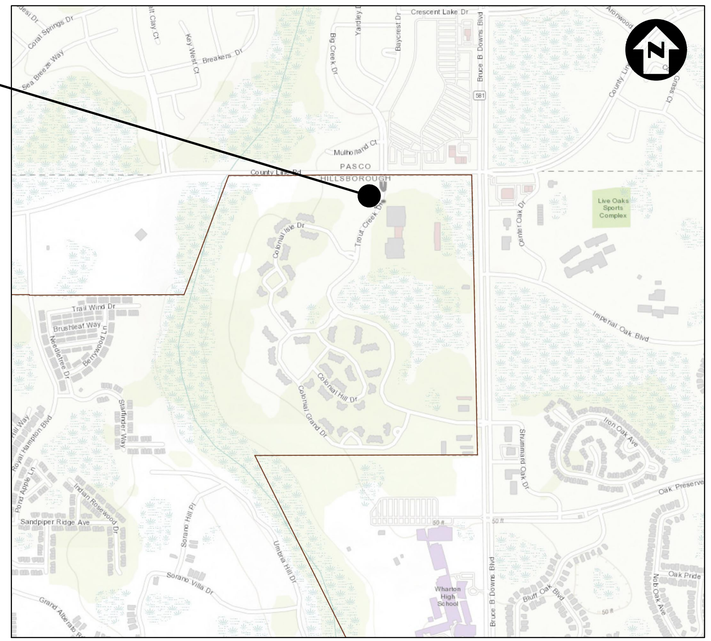

VICINITY MAP
HILLSBOROUGH COUNTY, FLORIDA
Section 1, Township 27S, Range 19E

OWNER
City of Tampa
306 E. Jackson Street
Tampa, FL 33602
813-274-8773

LEGAL DESCRIPTION

(Per OR Book 19022, Page 1144)
COLONIAL GRAND AT HAMPTON PRESERVE:
That portion of Section 1, Township 27 South, Range 19 East, Hillsborough County, Florida, being further described as follows:

Commence at the Northeast corner of Section 1, Township 27 South, Range 19 East, Hillsborough County, Florida; thence along the North boundary of the Northeast 1/4 of said Section 1, North 89 deg 56 min 45 sec West, 100.01 feet; thence leaving said line, South 00 deg 40 min 23 sec East, 60.00 feet to a point of intersection of the South right-of-way line of County Line Road (State Road No. S-582) and the West right-of-way line of Bruce B. Downs Boulevard (State Road 581); thence along said South right-of-way line of County Line Road being 60 feet South of and parallel with the North boundary of Section 1, North 89 deg 56 min 45 sec West, 1,292.97 feet; thence leaving said South right-of-way line, South 00 deg 03 min 15 sec West, 139.51 feet to the POINT OF BEGINNING; thence South 00 deg 03 min 15 sec West, 39,65 feet; thence South 64 deg 18 min 14 sec East, 257.19 feet to a non-tangent curve concave Northwesterly, having a radius of 370.00 feet; thence Southwesterly along said curve 118.13 feet through a central angle of 18 deg 17 min 34 sec (chord bearing South 30 deg 34 min 43 sec West, 117.63 feet); thence South 39 deg 43 min 30 sec West, 122.45 feet; thence North 64 deg 18 min 14 sec West, 409.25 feet; thence North 00 deg 03 min 15 sec East, 169.42 feet; thence South 89 deg 56 min 45 sec East, 275.00 feet to the POINT OF BEGINNING.

5M Civil LLC

Professional Civil Engineering Services
12315 Wycliff Pl
Tampa, FL 33626
PHONE: (813) 404-8872
www.5mcivil.com
FBPR Certificate of Authorization No: 26.929

DRAWING INDEX

(TOTAL NUMBER OF SHEETS = 16)

GENERAL
G-1 Cover Sheet
G-2 Construction Notes, Legend & Symbology
G-3 Existing Conditions/Demolition Plan

CIVIL
C-1 Master Site Plan
C-2 Paving, Grading and Drainage Plan
C-3 Utility Service Plan

CIVIL DETAILS
CD-1 PGD Details
CD-2 Wastewater Details
CD-3 Water Details
CD-4 Water Details
CD-5 Misc Details

LANDSCAPING
LA-002 Tree Preservation, Protection and Removal Plan
LA-300 Planting Plans
LA-301 Planting Notes and Details
LA-400 Irrigation Plans
LA-401 Irrigation Notes and Details

REFERENCE (FDOT Design Standard Indexes)
001 - Standard Abbreviations
102 - Temporary Erosion and Sediment Control
232 - Ditch Bottom Inlets - Types C, D, E And H
272 - Cross Drain Mitered End Section
282 - Back of Sidewalk Drainage
300 - Curb & Curb and Gutter
304 - Public Sidewalk Curb Ramps
310 - Concrete Sidewalk
802 - Fence Type B

DATE	REVISION
6/30/17	FINAL PLANS

PROJ NAME

Engineer of Record:
Jesus A. Merly, PE FL Reg No. 58113

JESUS ANTONIO MERLY LICENSE No. 58113 STATE OF FLORIDA PROFESSIONAL ENGINEER

Jesus A. Merly, PE FL Reg No. 58113

CONSTRUCTION NOTES

GENERAL

1. Specific requirements of CITY OF TAMPA (COT) specifications and standards are incorporated into the contract documents by reference.
2. Specific requirements of the Florida Department of Transportation's Roadway and Traffic Design Standards, and Standard Specifications for Road and Bridge Construction are incorporated into the contract documents by reference.
3. All specifications and documents referred to in these plans shall be of the latest revision.
4. The Contractor shall maintain copies of all applicable permits on-site and shall be responsible to adhere to all permit conditions during construction.
5. The Contractor shall become familiar with the permit and inspection requirements specified by the various governmental agencies. The Contractor shall obtain all necessary permits prior to construction, and schedule any necessary inspections according to agency instructions.
6. All work performed shall comply with the regulations and ordinances of the various governmental agencies having jurisdiction over the work.
7. Contractor shall submit shop drawings on all precast and manufactured items to the owner's engineer for approval. Failure to obtain approval before installation may result in removal and replacement at Contractor's expense.
8. Contractor shall locate all existing utilities before ordering materials and casting structures.
9. Work performed under this contract shall interface smoothly with other work being performed on site by other Contractors and utility companies. It will be necessary for the Contractor to coordinate and schedule activities, where necessary, with other Contractors and utility companies, including electric, cable, telephone and utility company subcontractors.
10. It shall be the responsibility of the Contractor to obtain the required permits to perform work in the public right-of-way.
11. Contractor shall provide appropriate signage for construction traffic in accordance with FDOT Standard Index 600 and the United States Department of Transportation Federal Highway Administration's "Manual on Uniform Traffic Control Devices for Streets and Highways" (MUTCD).
12. The Contractor shall endeavor to protect private and public property. Any damage caused by the Contractor in the performance of his work shall be corrected to the satisfaction of the engineer in a timely manner. Payment shall not be made for this work.
13. Overall cleanup shall be accomplished by the Contractor in accordance with county standards or as directed by the engineer. Any and all expenses incurred for this work shall be included in the price bid for other items.
14. Any damage to state, county, or local roads caused by the Contractor's hauling or excavation equipment shall be repaired by the Contractor in a timely manner to the satisfaction of the Engineer. Payment shall not be made for this work.

SAFETY

1. During the construction and maintenance of this project, all safety regulations are to be enforced. The Contractor or his representative shall be responsible for the control and safety of the traveling public and the safety of Contractor's personnel.
2. Labor safety regulations shall conform to the provisions set forth by OSHA.
3. Contractor shall provide and maintain its own safety equipment in accordance with its health & safety program and all other applicable legal and health and safety requirements. The Contractor is also responsible for providing its employees and subcontractors with adequate information and training to ensure that all employees and subcontractors and subcontractors' employees comply with all applicable requirements. Contractor shall remain in compliance with all occupation safety and health regulations as well as the environmental protection laws. The following is not to be perceived as the entire safety program but just basic requirements.
4. All excavations by the Contractor shall conform to the requirements of the Department of Labor's Occupational Safety and Health Administration rules and regulations. Particular attention must be paid to the construction standards for excavations, 29 CFR Part 1926, subpart P.
5. The minimum standards as set forth in the current edition of "The State Of Florida, Manual On Traffic Control And Safe Practices For Street And Highway Construction, Maintenance and Utility Operations" shall be followed in the design application, installation, maintenance and removal of all traffic control devices, warning devices and barriers necessary to protect the public and workmen from hazards within the project limits.
6. It shall be the sole responsibility of the Contractor to comply and enforce all applicable safetyregulations. The above information has been provided for the Contractor's information only and does not imply that the owner or engineer will inspect and/or enforce safety regulations.

SURVEY

1. Contractor shall protect property markers, monuments temporary benchmarks and other survey control points. The contractor's registered surveyor shall replace to existing or better condition any disturbed property markers, monuments and temporary benchmarks to their original condition at the Contractor's expense.
2. All points and monuments shall be surveyed upon mobilization to verify their accuracy. Any discrepancies discovered must be brought to the attention of the engineer in writing.
3. Upon completion of construction, the contractor shall furnish the owner's engineer with complete "as-built" information certified by a registered land surveyor. This "as-built" information shall include invert elevations, location of fittings, location of structures for all utilities installed, as well as top of bank, toe of slope and grade break locations and elevations for pond and ditch construction. No engineer's certifications for certificate of occupancy purposes will be made until this information is received and approved by the owner's engineer.
4. The topographical survey depicted within this plan set was based on a field survey date of 6/5/2017. Existing topography and features shown are indicative of field conditions at that time.
5. All utilities depicted hereon are from visible evidence only. Surveyor did not contact subsurface utility locator service.
6. No underground foundations or footers were excavated or located for this survey.
7. The bearing structure for this survey is based on a NAD 1983 Florida State Plane West Zone, bearing of S 39°42'15" W for the Easterly Boundary of Subject Property also being the Westerly Right-of-way boundary of Trout Creek Drive.
8. The horizontal datum utilized for this project is NAD 1983 Florida West Zone, 2011 Adjustment, U.S. Survey Feet. Said datum was established by utilizing the Florida Permanent Reference Network (FPRN).
9. The vertical datum utilized for this project is NAVD 1988, U.S. Survey Feet. The benchmark utilized was National Geodetic Survey (NGS) Control Station "VA-580" with an elevation of 57.68 feet.
10. This Survey has been performed without benefit of title policy or abstract. Therefore surveyor can make no guarantees to ownership or encumbrances. There may be additional easements and restrictions that can be found within the Public Records of Hillsborough County.

GENERAL EROSION AND TURBIDITY CONTROL NOTES

1. The Site Subcontractor shall be responsible for installation and maintenance of all erosion and turbidity controls and the quality and quantity of offsite or wetland discharges.
2. Prior to construction, the Site Subcontractor is responsible for having his dewatering plan and turbidity control plan approved by the applicable reviewing agencies. Refer to the project's permit approvals and permit conditions for agencies requiring such review and approval. Questions concerning appropriate techniques should be addressed to those agencies and/or discussed with the project engineer and owner. Dewatering activity within the locations of trees must be outside of the protective radius of trees will require supervision of an arborist and a watering schedule
3. The appropriate turbidity and erosion control methodologies selected by the Site Subcontractor for this project should be made following assessment of the plans and project site specific factors and after consultations as needed with the project engineer and appropriate agencies. The Site Subcontractor will be responsible for obtaining any and all necessary permits for such activity.
4. At the onset of construction, the Site Subcontractor, as the party responsible for implementation of the erosion and sediment control plan, shall assess the above described conditions and factors with respect to relative cost effectiveness and select the appropriate methods of protection. A fairly extensive list of techniques are presented below but it must be stressed that any or all of the following may be necessary to maintain water quality and quantity standards. The construction sequencing should be thought out in advance of initiation to provide adequate protection of water quality.
5. Discharges which exceed 29 N.T.U.'s over the background levels are in violation of state water quality standards. Discharges of water quantities which affect offsite properties or may damage wetlands are also prohibited by regulating agencies.
6. The erosion and turbidity control measures shown hereon are the minimum required for agency approval. Additional control and measures may be required due to the Site Subcontractor's construction sequence & unforeseen weather conditions. Any additional measures deemed necessary by the Site Subcontractor shall be included in the lump sum bid with no extras for materials and labor allowed.
7. Hay bales or silt screens shall be installed prior to land clearing to protect water quality and to identify areas to be protected from clearing activities and maintained for the duration of the project until all soil is stabilized. Silt screens adjacent to tree to be preserved shall be set at the minimum require protective radius prescribed by the City of Tampa Natural Resources.
8. Floating turbidity barriers shall be in place in flowing systems or in open water lake edges prior to initiation of earthwork and maintained for the duration of the project until all soil is stabilized.
9. No clay material shall be left exposed in any stormwater storage facility. If clay or sandy-clays are encountered during stormwater storage excavation, the Site Subcontractor shall notify the Engineer immediately before proceeding with further excavation. If the Engineer of Record has determined that such soils are non-confining and must be excavated to meet permit and design conditions, excavation may proceed after obtaining written authorization from the appropriate governing agency. If said soils are left exposed at the permitted and designed depth, the Site Sunctontractor shall over-excavate the pond's bottom and side slopes by a minimum of twelve (12") inches and backfill with clean sands to help prevent suspension of fine particles in the water column.
10. The installation of temporary erosion control barriers shall be coordinated with the construction of the permanent erosion control features to the extent necessary to assure effective and continuous control of erosion and water pollution throughout the life of the construction phase.
11. The type of erosion control barriers used shall be governed by the nature of the construction operation and soil type that will be exposed. Silty and clayey material may require solid sediment barriers to prevent turbid water discharge, while sandy material may need only silt screens or hay bales to prevent erosion. Floating turbidity curtains should generally be used in open water situations. Diversion ditches or swales may be required to prevent turbid stormwater runoff from being discharged to wetlands or other water bodies. It may be necessary to employ a combination of barriers, ditches, and other erosion/turbidity control measures if conditions warrant.
12. Where pumps are to be used to remove turbid waters from construction areas, the water shall be treated prior to discharge to the wetlands. Treatment methods include, for example, turbid water being pumped into grassed swales or appropriate upland vegetated areas (other than upland preservation areas and wetland buffers), sediment basins, or confined by an appropriate enclosure such as turbidity barriers or low berms, and kept confined until turbidity levels meet State Water Quality Standards.
13. The Permittee shall schedule his operations such that the area of unprotected erodible earth exposed at any one time is not larger than the minimum area necessary for efficient construction operation, and the duration of exposed, uncompleted construction to the elements shall be as short as practicable. Clearing and grubbing shall be so scheduled and performed such that grading operations can follow immediately thereafter. Grading operations shall be so scheduled and performed that permanent erosion control features can follow immediately thereafter if conditions on the project permit.
14. Water derived from various dewatering methods should be passed through sufficiently wide areas of existing upland vegetation to filter out excess turbidity. If this is not sufficient, the water shall be retained in previously constructed permanent stormwater ponds or else retained in temporary sedimentation basins until the clarity is suitable to allow for its discharge. Plugging the outfalls from completed stormwater ponds may be needed to avoid discharge. However, such situations should be monitored closely to preclude berm failure if water levels rise too high.
15. Water can be transported around the site by the use of internal swales or by pumps and pipes.
16. Sheet flow of newly filled or scraped areas may be controlled or contained by the use of brush barriers, diversion swales, interceptor ditches or low berms. Flow should be directed toward areas where sediments can sufficiently settle out.
17. Exposed soils shall be stabilized as soon as possible, especially slopes leading to wetlands. Stabilization methods include solid sod, seeding and mulching or hydromulching to provide a temporary or permanent grass cover mulch blankets, filter fabrics, etc., can be employed to provide vegetative cover.
18. Energy dissipaters (such as rip rap, a gravel bed, hay bales, etc.) shall be installed at the discharge point of pipes or swales if scouring is observed.
19. Attempt to install roadway curb and gutters as soon as possible to reduce the surface area for erosion to occur.
20. Implement storm drain inlet protection (hay bales or gravel) to limit sedimentation within the stormwater system. Perform inspections and periodic cleaning of sediments which wash out into the streets until all soil is stabilized.
21. Water discharge velocities from impounded areas and temporary sedimentation basins shall be restricted to avoid scouring in receiving areas.
22. If water clarity does not reduce to state standards rapidly enough in holding ponds, it may be possible to use chemical agents such as alum to flocculate or coagulate the sediment particles.
23. Hay bales, silt screens, or gravel beds can be added around the pipe or swale discharge points to help clarify discharges. Spreader swales may help dissipate cloudy water prior to contact with wetlands.
24. All fuel storage areas or other hazardous storage areas shall conform to accepted state or federal criteria for such containment areas.
25. Vehicle or equipment washdown areas will be sufficiently removed from wetlands or offsite areas and all tree preserve areas.
26. Fugitive dust controls (primarily by using water spray trucks) shall be employed as needed to control windborn emissions.
27. If the above controls remain ineffective in precluding release of turbid water, especially during pond or utility line dewatering, then the contractor may be compelled to use a vertical dewatering system such as well points or sock drains to withdraw groundwater which may already be clear enough to allow for direct discharge to wetlands.
28. Ongoing inspections and periodic maintenance by the Site CONTRACTOR/SUBCONTRACTOR shall occur throughout construction as necessary to insure the above methods are working suitably. This may be needed daily, if conditions so warrant.
29. The contractor will perform daily inspections of all on-site wetlands within the construction area to ensure that water levels within those wetlands are not excessively impounded prior to the time when the permitted control structure or outfall is built. Water levels significantly above normal should be corrected at a frequency that prevents a change in the vegetative character or health of any wetlands.

STREET & DRAINAGE CONSTRUCTION NOTES:

1. Grass and mulch, or solid sod, all areas in existing rights- of-way disturbed by construction.
2. Contractor is to coordinate all work within, but not limited to adjacent rights-of-way with utility companies in order to prevent damage to utility lines and making of adjustments to same, if required.
3. Prior to curb inlet construction, the Engineer shall lay out the back of the curb in the vicinity of the respective inlet for alignment and grade, and the Contractor shall construct the inlet allowing for a concrete throat between the back of the curb and the face of the inlet. Any inlets constructed incorrectly by deviating from this sequence of inlet construction shall be the sole responsibility of the Contractor and no additional payment shall be made or allowed for removing and/or correcting the inlets.
4. Fill obtained through excavation of detention pond shall be placed on site and adjacent land in accordance with the Drainage and Grading Plan as directed by the Engineer and outside the protective radius of all trees to remain onsite.
5. Sod/Seed & Mulch shall be placed in accordance with applicable City/County standards as well as in accordance with standard and specific conditions in the SWFWMD permit, if applicable. At a minimum this shall include sodding of all pond embankments of a slope 5:1 or greater to the NW line, as well as seeding and mulching of the balance of the pond tracts (including pond berms, excluding the area below NW), sodding at a minimum of 2' from the back of curb, and seeding and mulching of any project area with a slope of 5:1 or steeper.
6. Building downspouts to be directed to the on-site storm drainage system.
7. Future expansion areas, if disturbed, to be grassed and mulched or sodded to prevent erosion to existing pavement surfaces.
8. Site clearing shall be performed per the approved construction plans and in accordance with City of Tampa Ordinances. Installation and maintenance of the required barricading and erosion control shall be the responsibility of the site development Contractor unless otherwise designated. There shall be no site clearing within the protective radius of trees.
9. Prior to beginning construction, Contractor shall expose all existing utility inverts to which a tie-in is proposed and have Engineer verify the elevation and adequacy of these inverts.

WATER AND SEWER CONSTRUCTION NOTES:

1. Prior to construction, the Contractor shall obtain from the Engineer or Owner a copy of all pertinent permits related to this project. It is the Contractor's responsibility to assure that all construction activities are in compliance with the conditions of all permits and approvals.
2. All construction, materials and workmanship are to be in accordance with CITY OF TAMPA Water and Wastewater Technical Manual, latest edition, unless otherwise noted herein.
3. Sod all areas in existing rights-of-way disturbed by construction.
4. Contractor is to coordinate all work within, but not limited to, City of Tampa rights-of-way with utility companies in order to prevent damage to utility lines and the making of adjustments to same, if required.
5. Contractor shall contact the engineer and/or the owner prior to any construction that may damage trees.
6. Contractor shall verify locations and depths of existing water and sewer lines prior to beginning construction.
7. Contractor shall be responsible for obtaining any and all road crossing and/or utility permits.
8. The existing underground utility lines shown hereon were taken from documents furnished by others and not field verified, therefore, the engineer cannot guarantee the accuracy of same nor that all are shown. The contractor shall expose all underground utility lines in coordination with the owners to his satisfaction and make adjustments to same in the event there are conflicts with new construction.
9. Adjusting manhole tops to match grade and slope of the finish paving shall be included in the respective contract unit price for manholes, payment of which will constitute full compensation for the construction and completion of the manhole, and no additional payment will be allowed or made for adjusting manhole tops.
10. The locations and elevation of all service lines are to be determined in the field by owner and/or contractor prior to construction of same.
11. All 6" sanitary sewer pipe shall be constructed at a 1.0% minimum slope.
12. All 4" sanitary sewer pipe shall be constructed at a 1.2% minimum slope.
13. All PVC pressure pipe shall have a minimum 36" cover.
14. All PVC water main pressure pipe shall conform to the requirements found in AWWA Standard C-900, latest edition at the time of plan approval. All fittings and required appurtenances shall meet the requirements of the CITY OF TAMPA Water and Wastewater Technical Manual, latest edition, unless otherwise noted herein.
15. All water main pipe and fittings installed under this project shall be color coded or marked in accordance with subparagraph 62-555.320(21)(b)3, Florida Administrative Codes, using blue as the predominant color.
16. Sanitary sewers, force mains and storm sewers should cross under water mains. Sanitary sewers, force mains and storm sewers crossing water mains shall be laid to provide a minimum vertical distance of 18 inches between the invert of the upper pipe and the crown of the lower pipe whenever possible.
17. When sanitary sewers, force mains and storm sewers must cross a water main with less than 18 inches vertical distance, both the sewer and the water main shall be constructed of ductile iron pipe (DIP) at the crossing. (DIP is not required for storm sewers if it is not available in the size proposed.) Sufficient lengths of DIP must be used to provide a minimum separation of 10 feet between any two joints. All joints on the water main within 20 feet of the crossing must be leak free and mechanically restrained. A minimum vertical clearance of 6 inches must be maintained at the crossing.
18. Where there is no alternative to sewer pipes crossing over a water main, the criteria for minimum separation of 18 inches between lines and 10 feet between joints shall be required.
19. All crossings shall be arranged so that the sewer pipe joints and the water main pipe joints are equidistant from the point of crossing (pipes centered on the crossing).
20. Where a new pipe conflicts with an existing pipe, the new pipe shall be constructed of DIP and the crossing shall be arranged to meet the requirements above.
21. A minimum 10-foot horizontal separation shall be maintained between any type of sewer and water main in parallel installations whenever possible.
22. In cases where it is not possible to maintain a 10-foot horizontal separation between any type of parallel sewer and water main, the water main must be laid in a separate trench or on an undisturbed earth shelf located on one side of the sewer or force main at such an elevation that the bottom of the water main is at least 18 inches above the top of the sewer.
23. Where it is not possible to maintain a vertical distance of 18 inches or a horizontal distance of 10 feet in parallel installations, the water main shall be constructed of DIP and the sewer or the force main shall be constructed of DIP (if available in the size proposed) with a minimum vertical distance of 6 inches. The water main should always be above the sewer. Joints on the water main shall be located as far apart as possible from joints on the sewer or force main (staggered joints).
24. All DIP shall be class 50 or higher. Adequate protective measures against corrosion shall be used.
25. Bends shall be installed in force main and/or water main to avoid unforeseen conflicts in existing or proposed structures. Thrust blocking may be used in lieu of joint restraint as approved by the Engineer of Record.
26. The joint deflection method shall be used where practical in lieu of installing bends.
27. Fire hydrant, gate valve and blow-off valve assemblies shall consist of all pipe, valves, tees, fittings, and any and all other appurtenances comprising a complete, working unit.
28. The location of new fire hydrants shall be identified with a blue reflective pavement marker installed on the roadway. The reflective marker shall be located perpendicular to the hydrant, in the center of the lane closest to the hydrant.
29. All valve box assemblies located within roadways or parking areas shall be protected from truck traffic by use of 6" thick reinforced concrete pads poured around valve boxes (see detail).
30. All subsurface construction shall comply with the "Trench Safety Act." The Contractor shall insure that the method of trench protection and construction is in compliance with the Occupational Safety and Health Administration (OSHA) regulations.

OWNER'S INSTRUCTIONS FOR MAINTENANCE AND INSPECTION OF STORMWATER FACILITIES

The entire stormwater system should be inspected on at least a semi-annual basis. This should include a visual inspection of the pond, pond banks, bleed-down orifices, other control structures, and discharge pipes. These should be kept free of debris and cleaned on a frequency as required to keep them functional, as designed. Mowing/clearing around the structures may be required to prevent vegetation from clogging them.

Wetland plants, if intentionally installed, should be monitored and maintained as required on the approved construction plans. Areas of littoral shelving, which are required to be vegetated but not intentionally planted, should not be cleared of the wetland plants. These areas should have as high a plant coverage as possible, for maximum water filtration.

Sediment sumps, if designed and installed, should have sediment removed as necessary to allow them to efficiently remove suspended particles. They should be re-dug to the original design specifications, if silted in.

For percolation treatment ponds/swales, the owner of the facility shall inspect the pond bottom periodically after heavy rainfall events to check for persistent ponding or pooling of water. All large debris shall be removed and disposed of elsewhere.

If prolonged ponding persists, i.e., in excess of 72 hours, the owner shall rake or scarify the surface. If required, the soil in the area of ponding shall be removed and replaced with clean sandy, non-cohesive soils.

Please check the construction plans to see if written reports on monitoring or plant survival rates are required to be sent to any reviewing agencies. Written notes should always be kept which describe maintenance activities undertaken during each inspection.

Specific conditions of all permits may require additional maintenance activities above and beyond those outlined above. Please be aware of all permit conditions as issued by regulatory agencies to ensure permit compliance.

TREE PROTECTION AND TREE REMOVAL

1. Trees to be protected and/or removed are to be determined during construction plan submittal.
2. All trees to remain, where indicated on the returned site plan, must be protected by tree protection barricades meeting the minimum standards shown. Chain link fencing shall be used where shown on these plans. Protective barricades shall remain in place until land alteration and construction activities are completed.
3. Pruning of a Grand Oak, shall be reviewed and approved by permit from Natural Resources prior to pruning and is prohibited unless conducted in accordance with the ANSI-A-300 Pruning Standards, and performed by an Arborist certified by the International Society of Arboriculture (ISA) or a Registered Consulting Arborist with the American Society of Consulting Arborists (ASCA). A notarized affidavit affirming an ISA Certified Arborist or an ASCA Registered Consulting Arborist will conduct or provide onsite supervision of the pruning shall be submitted to the City of Tampa Natural Resources prior to the pruning of a Grand Oak. An ISA Certified Arborist or an ASCA Registered Consulting Arborist contracted by a property owner to prune a Grand Oak shall assume full responsibility for all pruning activities determined in non-compliance with standards specified within the Land Development Code.
4. During land alteration and construction activities, it shall be unlawful to remove vegetation by grubbing or to place soil deposits, debris, solvents, construction material, machinery or other equipment of any kind within the dripline of a tree to remain on the site unless otherwise approved by the City of Tampa Natural Resources.
5. In order to minimize soil erosion, proposed land alteration activities shall not unnecessarily remove existing vegetation and alter existing topography. Adequate protection measures (i.e., hay bales, baffles, sodding and sandbagging) shall be provided, as necessary, to minimize erosion and downstream sedimentation caused by surface water runoff on exposed land surfaces.
6. All tree roots existing within proposed improvement areas and originating from a protected tree shall be severed clean at the limits of the preserved area as identified on the approved construction plans. Utilization of root pruning equipment producing a clean, non-tattered cut is required. Root pruning of grand trees must be approved and supervised by Natural Resources.
7. All trimming undertaken on a tree to be retained according to the permitted construction plans shall be pruned in accordance with the National Arborist Association (NAA) standards. Failure to conform to these pruning standards may result in a delay in issuance of the Certificate of Occupancy (C/O).
8. Minor Pruning: Minor Pruning is the pruning of a tree by the removing branches measured no greater than three inches in diameter at the point of connection to a supporting branch and shall be in accordance to the American National Standards.

CONSTRUCTION SITE WORK TESTING

1. The Contractor is responsible for coordinating applicable testing with the soils engineer. Tests will be required pursuant with the table below. Upon completion of the work, soils Engineer will submit certifications to the Owner's Engineer stating that all requirements have been met.
2. A qualified testing laboratory shall perform all testing necessary to assure compliance of the in place materials as required by these plans and the various agencies. Should any retesting be required due to the failure of any tests to meet the requirements, the Contractor will bear all cost of said retesting.

ITEM	TEST	TEST FREQUENCY
Embankment	Optimum moisture/maximum density	Per soil type
	100% of maximum density as determined by AASHTO T, Method C	One per 500 ft
Utility Trench Backfill and Around Structures	Optimum moisture/maximum density	Per soil type
	100% of maximum density as determined by AASHTO T, Method C	One per 500 ft
Stabilized Subgrade	Optimum moisture/maximum density	Per material type
	98% of maximum density as determined by FM 1-T 180, Method D.	One per 500 ft
	LBR	One per 1000 ft
Base	Optimum moisture/maximum density	Per material type
	98% of maximum density as determined by FM 1-T 180, Method D.	One per 500 ft
	LBR	Per source
Asphaltic Concrete	Aggregate Analysis	One per design
	Design Mix	One per type
	Gradation Stability Flow	One per day
	Properties of in place materials (Marshal)	One per day
	Thickness	One per 500 ft or 1 per street
	95% of Lab Density	One per 500 ft or 1 per street

TYPICAL SECTION & DETAIL NUMBERING SYSTEM

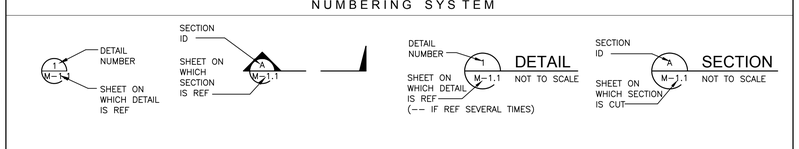

LEGEND & SYMBOLOGY

EXISTING

SYMBOL	DESCRIPTION
●	Found Iron Rod or Pipe
■	Found Concrete Monument
◉	Found P.K. Nail & Disk
○	Set 5/8" Capped Iron Rod
⊙	Set P.K. Nail & Disk
(F)	Field Measurement
(P)	Plat Reference
FT.	Feet
W/	With
No.	Number
Id.	Identification
CMP	Corrugated Metal Pipe
	Temporary Benchmark
TBM	Temporary Benchmark
P.S.M.	Professional Surveyor and Mapper
TYP.	Typical
	Power Pole
X—X—	Fence
E—E—	Overhead Utility Lines
	Guard Rail
⟶	Guy Wire
UE—UE—	Underground Electric
	Swale

SYMBOL	DESCRIPTION
INVERT	Invert
INV.	Invert
E	Electrical Pull Box
E	Electric Vault
	Light Pole
T	Telephone Pull Box
	Water Valve
	Backflow Preventer
	Catch Basin
S	Sanitary Manhole
D	Storm Manhole
W	Water Meter
	Blow Off Valve
MB	Mail Box
	Fire Hydrant
FF	Finish Floor
	Spot Elevation
	Oak
	Palm
	Pine
	Unknown
	Cypress

LINETYPE	DESCRIPTION
	PROPERTY LINE
	RIGHT-OF-WAY (EXISTING)
	EASEMENT LINE
	WETLAND JURISDICTION LINE
	WETLAND SETBACK LINE
	MAJOR CONTOUR LINE
60	MINOR CONTOUR LINE
	TOP OF BANK OR TOE OF SLOPE
	EDGE OF PAVEMENT OR CURB
	EDGE OF DIRT/GRAVEL ROAD
WM WM	EXISTING WATER MAIN
RC RC	EXISTING RECLAIMED WATER MAIN

FINISHED

SYMBOL	DESCRIPTION
	TOPSOIL
	AGGREGATE OR RIP RAP
	CONCRETE
	ASPHALT
	COMPACTED FILL
	DITCH BOTTOM INLET

SYMBOL	DESCRIPTION
60.0	SPOT ELEVATION
MEG	MATCH EXISTING GRADE
	FLOW ARROW
©	CLEANOUT
	SANITARY MANHOLE
OR	MITERED END SECTION
2.0%	GRADE
4:1	SLOPE

LINETYPE	DESCRIPTION
	CENTERLINE
	SWALE
	WATER SURFACE
60	MAJOR CONTOUR LINE
59	MINOR CONTOUR LINE
	EDGE OF PAVEMENT
	CURB & GUTTER
	STORM SEWER
	C/L ROADWAY
	SANITARY SEWER
WM WM WM	WATER MAIN
RC RC	RECLAIMED WATER MAIN
WF WF	WOOD FENCE
	TREE-BARRICADE - WOOD
CL CL	TREE-BARRICADE - CLF REQUIRED WHERE SHOWN
	ROOT PRUNE
	SILT FENCE
	FLOATING TURBIDITY BARRIER

ABBREVIATIONS WITHIN THIS PLAN SET ARE IN ACCORDANCE WITH THE STANDARD ABBREVIATIONS SHOWN IN THE FDOT STANDARD DESIGN INDEX 001 SHEETS 1 AND 2.

CITY OF TAMPA
CONTRACT ADMINISTRATION DEPARTMENT
PLANNING AND DESIGN DIVISION
306 E JACKSON STREET 4 NORTH
TAMPA, FLORIDA 33602
p. 813. 274. 8456 - f. 813. 274. 8080
url: www.tampagov.net

James E. Jackson, Jr. AIA, NOMA
City Architect
Edward D. Rice, AIA
Project Architect
Kevin L. Herlica, AIA
Project Architect
Thomas A. Hester, Sr., AIA, NOMA
Project Architect
Kinsey C. Tillman
Drafting Technician
Jerry P. Sanders
Drafting Technician
Byron K. Thomas, LEED AP
Drafting Technician

MEP CONSULTANT
GRINER ENGINEERING, INC.
1628 1st. AVENUE NORTH
ST. PETERSBURG, FL 33713

STRUCTURAL CONSULTANT
BILLER REINHART
STRUCTURAL GROUP, INC.
4014 GUNN HWY. SUITE 248
TAMPA, FL 33713

CIVIL CONSULTANT
FBPR Certificate of Authorization No.: 26929
5M CIVIL LLC
12315 Wycliff Pl
Tampa, FL 33626
(813) 404-8872
www.5mcivil.com

LANDSCAPE CONSULTANT
DAVID CONNOR & ASSOCIATES
1509 W. SWANN AVENUE
SUITE 255
TAMPA, FL 33606

FIRE STATION 23
20770 TROUT CREEK DR.
TAMPA, FL 33647

DPW FILE NUMBER

DPW NUMBER
17-C-00037

ISSUE DATE
???

DRAWN BY
JAM

REVISIONS

SEAL
JESUS ANTONIO MERLY LICENSE No. 58113 STATE OF FLORIDA PROFESSIONAL ENGINEER
Jesus A. Merly, PE FL Reg No. 58113

Elevations shown within this plan set are based on North American Vertical Datum (NAVD 1988)

CONSTRUCTION NOTES LEGEND & SYMBOLOGY

SHEET NUMBER:
G-2

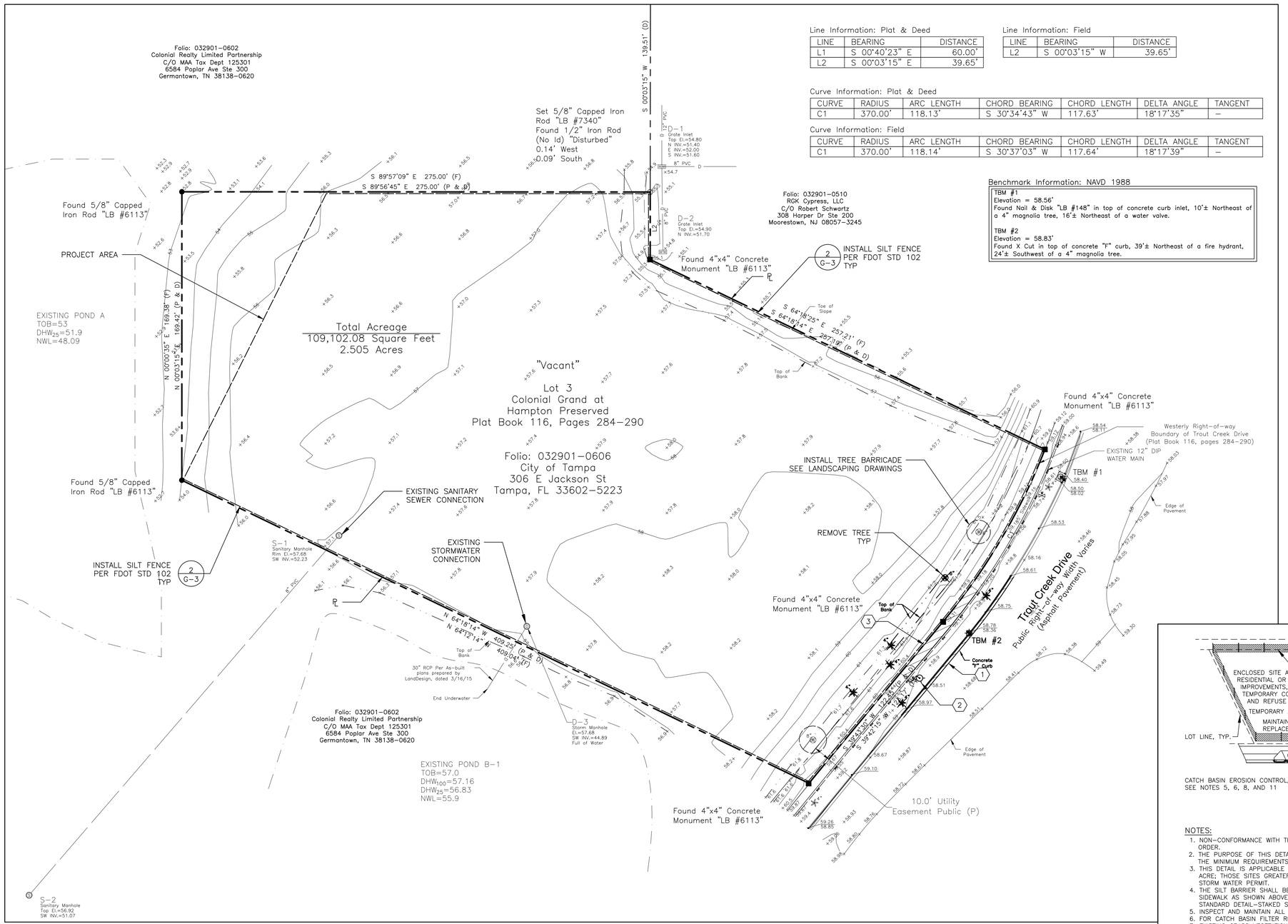

Line Information: Plat & Deed

LINE	BEARING	DISTANCE
L1	S 00°40'23" E	60.00'
L2	S 00°03'15" E	39.65'

Line Information: Field

LINE	BEARING	DISTANCE
L2	S 00°03'15" W	39.65'

Curve Information: Plat & Deed

CURVE	RADIUS	ARC LENGTH	CHORD BEARING	CHORD LENGTH	DELTA ANGLE	TANGENT
C1	370.00'	118.13'	S 30°34'43" W	117.63'	18°17'35"	–

Curve Information: Field

CURVE	RADIUS	ARC LENGTH	CHORD BEARING	CHORD LENGTH	DELTA ANGLE	TANGENT
C1	370.00'	118.14'	S 30°37'03" W	117.64'	18°17'39"	–

Benchmark Information: NAVD 1988

TBM #1
Elevation = 58.56'
Found Nail & Disk "LB #148" in top of concrete curb inlet, 10'± Northeast of a 4" magnolia tree, 16'± Northeast of a water valve.

TBM #2
Elevation = 58.83'
Found X Cut in top of concrete "F" curb, 39'± Northeast of a fire hydrant, 24'± Southwest of a 4" magnolia tree.

DEMOLITION KEY NOTES	
1	SAWCUT AND REMOVE EXISTING TYPE F CURB
2	REMOVE HYDRANT AND RESET VALVE BOX AS NEEDED. SEE SHEET C-3.
3	SAWCUT AND REMOVE EXISTING SIDEWALK.



DEMOLITION LEGEND

- (1) KEY NOTE
- SILT FENCE
- TURBIDITY BARRIER
- TREE REMOVAL
- PAVEMENT AND/OR STRUCTURE REMOVAL

DEMOLITION NOTES:

1. CONTRACTOR SHALL PERFORM A SITE VISIT PRIOR TO SUBMITTING A BID TO EVALUATE EXISTING CONDITIONS ON-SITE.
2. CONTRACTOR SHALL MAINTAIN SILT FENCING AND TREE BARRICADES IN PROPER FUNCTIONING CONDITION THROUGHOUT CONSTRUCTION. CHAIN LINK FENCING SHALL BE UTILIZED FOR BARRICADES WHERE REQUIRED.
3. INSTALL OFFSITE SOIL TRACKING PREVENTION DEVICE AT CONSTRUCTION ACCESS/INGRESS. SEE DETAIL 1 SHEET G-3.
4. ALL DISTURBED AREAS SHALL BE SODDED.
5. CONTRACTOR SHALL MAINTAIN TRAFFIC IN ACCORDANCE WITH FDOT TRAFFIC CONTROL STANDARD INDICES 600, 602 AND 605.
6. REFER TO LANDSCAPE DRAWINGS FOR TREE PROTECTION, TREE BRANCH PRUNING, ROOT PRUNING AND TREE PRUNING REQUIREMENTS.

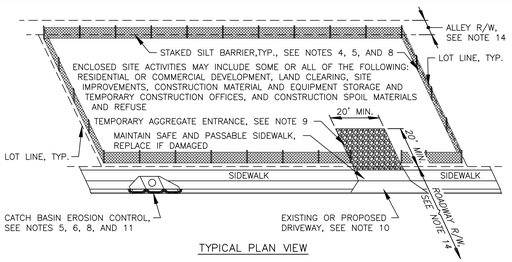

TYPICAL PLAN VIEW

NOTES:

1. NON-CONFORMANCE WITH THE ITEMS LISTED OR SHOWN ON THIS DETAIL MAY RESULT IN A "STOP WORK" ORDER.
2. THE PURPOSE OF THIS DETAIL IS TO ASSIST THE DEVELOPER, BUILDER, AND/OR CONTRACTOR TO MEET THE MINIMUM REQUIREMENTS OF THE NATIONAL POLLUTANT DISCHARGE ELIMINATION SYSTEM (NPDES)
3. THIS DETAIL IS APPLICABLE FOR ALL CONSTRUCTION SITES AS DESCRIBED ABOVE OF LESS THAN ONE (1) ACRE; THOSE SITES GREATER THAN ONE (1) ACRE ALSO MUST OBTAIN COVERAGE UNDER AN NPDES STORM WATER PERMIT.
4. THE SILT BARRIER SHALL BE INSTALLED ONE FOOT INSIDE THE PROPERTY LINE OR TWO FEET FROM THE SIDEWALK AS SHOWN ABOVE. FOR SILT BARRIER REQUIREMENTS AND INSTALLATION REQUIREMENTS, SEE STANDARD DETAIL-STAKED SILT BARRIER
5. INSPECT AND MAINTAIN ALL EROSION CONTROL DEVICES DAILY AND/OR AFTER A RAINFALL.
6. FOR CATCH BASIN FILTER REQUIREMENTS, SEE FDOT STANDARD INDEX 102.
7. EXISTING GRASS VEGETATION SHALL BE MAINTAINED AT A 10 INCH HEIGHT OR LESS
8. ALL SOIL EROSION CONTROL DEVICES MUST REMAIN IN PLACE UNTIL NEW VEGETATION IS ESTABLISHED. ALL DISTURBED AREAS SHALL BE SODDED AFTER FINAL GRADING.
9. TEMPORARY AGGREGATE ENTRANCE SHALL BE A MINIMUM 6" THICK OF STANDARD GRADATION SIZE #1 OR #2 RANGE AS PER FDOT SECTION 901, AND SHALL BE COMPACTED. AGGREGATE SHALL BE QUARTZ OR CRUSHED GRANITE. LIMEROCK, DOLOMITE OR SANDSTONE SHALL NOT BE ACCEPTABLE.
10. IF THERE IS NO EXISTING DRIVEWAY OR AN ALTERNATE INGRESS/EGRESS IS TO BE USED DURING CONSTRUCTION, THE METHOD OF ACCESS SHALL CONFORM TO THE "TEMPORARY AGGREGATE ENTRANCE" AS DESCRIBED ABOVE.
11. REGULARLY REMOVE COLLECTED SEDIMENT AND DEBRIS FROM THE SILT BARRIERS AND GUTTER FLOW LINE.
12. FOR ALL SAND AND SOIL STOCKPILES DUST/EROSION CONTROL MEASURES SHALL BE IMPLEMENTED.
13. KEEP CONSTRUCTION SITE LITTER/DEBRIS, AND LEAKING CONTAINERS IN ORDERLY CONTAINMENT AREAS.
14. SWEEP ENTRANCE AND ADJACENT ROADWAY WEEKLY TO KEEP FREE OF CONSTRUCTION DEBRIS.
15. SWEEP PAVED SURFACES ONLY. DO NOT WASH DOWN UNTIL SITE IS FINISHED.
16. SINGLE FAMILY INFILL LOTS MAY REQUIRE SILT FENCE AS ORDERED OR DIRECTED

1 G-3 SITE DEVELOPMENT AND/OR CONSTRUCTION STAGING SITE EROSION CONTROL DETAIL
NTS

CALL 48 HOURS BEFORE YOU DIG
IT'S THE LAW! DIAL 811
811 Know what's below. Call before you dig.
SUNSHINE STATE ONE CALL OF FLORIDA, INC.

CITY OF TAMPA
CONTRACT ADMINISTRATION DEPARTMENT
PLANNING AND DESIGN DIVISION
306 E. JACKSON STREET 4 NORTH
TAMPA, FLORIDA 33602
p. 813. 274. 8456 - f. 813. 274. 8080
url: www.tampagov.net

James E. Jackson, Jr. AIA, NOMA
City Architect
Edward D. Rice, AIA
Project Architect
Kevin L. Henika, AIA
Project Architect
Thomas A. Hester, Sr., AIA, NOMA
Project Architect
Kinsey C. Tillman
Drafting Technician
Jerry P. Sanders
Drafting Technician
Byron K. Thomas, LEED AP
Drafting Technician

MEP CONSULTANT
GRINER ENGINEERING, INC.
1628 1st. AVENUE NORTH
ST. PETERSBURG, FL 33713

STRUCTURAL CONSULTANT
BILLER REINHART
STRUCTURAL GROUP, INC.
4014 GUNN HWY. SUITE 248
TAMPA, FL 33713

CIVIL CONSULTANT
FBPR Certificate of Authorization No.: 26929
5M CIVIL LLC
12315 Wycliff Pl
Tampa, FL 33626
(813) 404-8872
www.5mcivil.com

LANDSCAPE CONSULTANT
DAVID CONNER & ASSOCIATES
1509 W. SWANN AVENUE
SUITE 255
TAMPA, FL 33606

FIRE STATION 23
20770 TROUT CREEK DR.
TAMPA, FL 33647

DPW FILE NUMBER

DPW NUMBER
17-C-00037

ISSUE DATE
???

DRAWN BY
JAM

REVISIONS

SEAL

JESUS ANTONIO MERLY LICENSE No. 58113 STATE OF FLORIDA PROFESSIONAL ENGINEER

Jesus A. Merly, PE FL Reg No. 58113

Elevations shown within this plan set are based on North American Vertical Datum (NAVD 1988)

EXISTING CONDITIONS DEMOLITION PLAN

SHEET NUMBER:
G-3

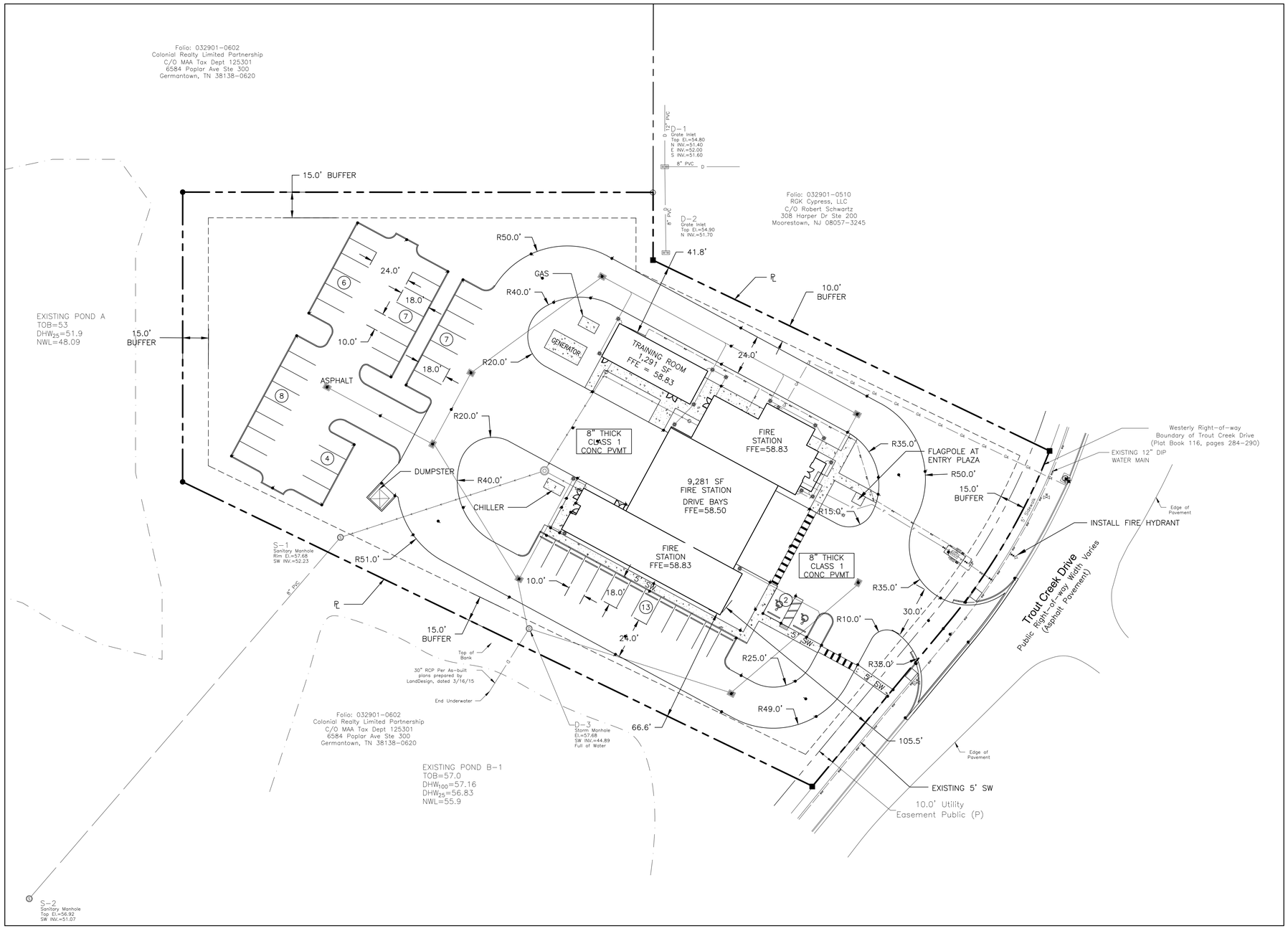

30 15 0 30 60

1"=30' FULL SIZE
1"=60' 11' X 17'

SITE DATA TABLE

Total Contiguous Area	109,102	sf
Total Contiguous Area	2.50	acres
Proposed Bldg GFA	10,571	sf
Finished Floor Elevation	58.50	ft NAVD
Number of Floors	1 story	
Current Building Use	N/A	
Proposed Building Use	Fire Station (Institution)	
Minimum Setback Front	10	ft
Minimum Setback Side	10	ft
Minimum Setback Rear	10	ft
Parking Required	35	spaces
Parking Provided	47	spaces
H/C Parking Required	2	spaces
H/C Parking Provided	2	spaces
Existing Site Impervious Area	0	sf
Proposed Site Impervious Area	58,534	sf
Existing Paved VUA	0	sf
Proposed Paved VUA	44,607	sf
Current Zoning	PD-A	
Land Use	Vacant	
Folio Number	032901.0606	
Floor Area Ratio	9.7%	
FEMA Panel Number	12057C0090H	
Potable Water	City of Tampa	
Sanitary Sewer	City of Tampa	
Fire Protection	City of Tampa	
Stormwater	City of Tampa	
Solid Waste	City of Tampa	

SITE PLAN NOTES:

1. Fire flow is provided by a proposed hydrant on the west side of Trout Creek Drive.
2. This is not a phased project.
3. There are no wetlands on-site.
4. Typical parking space size is 10' by 18'. ADA space size is 12' by 18'. Cross aisle width is 24' minimum.
5. The subject property is located in flood zone "X" according to Flood Insurance Rate Map Community Panel No. FEMA 12057C0090H bearing an effective date of August 28, 2008.

CALL 48 HOURS BEFORE YOU DIG
IT'S THE LAW! DIAL 811
811 Know what's below. Call before you dig.
SUNSHINE STATE ONE CALL OF FLORIDA, INC.

CITY OF TAMPA
CONTRACT ADMINISTRATION DEPARTMENT
PLANNING AND DESIGN DIVISION
306 E. JACKSON STREET 4 NORTH
TAMPA, FLORIDA 33602
p. 813. 274. 8456 - f. 813. 274. 8080
url: www.tampagov.net

James E. Jackson, Jr. AIA, NOMA
City Architect
Edward D. Rice, AIA
Project Architect
Kevin L. Henika, AIA
Project Architect
Thomas A. Hester, Sr., AIA, NOMA
Project Architect
Kinsey C. Tillman
Drafting Technician
Jerry P. Sanders
Drafting Technician
Byron K. Thomas, LEED AP
Drafting Technician

MEP CONSULTANT
GRINER ENGINEERING, INC.
1628 1st. AVENUE NORTH
ST. PETERSBURG, FL 33713

STRUCTURAL CONSULTANT
BILLER REINHART
STRUCTURAL GROUP, INC.
4014 GUNN HWY. SUITE 248
TAMPA, FL 33713

CIVIL CONSULTANT
FBPR Certificate of Authorization No.: 26929
5M CIVIL LLC
12315 Wycliff Pl
Tampa, FL 33626
(813) 404-8872
www.5mcivil.com

LANDSCAPE CONSULTANT
DAVID CONNER & ASSOCIATES
1509 W. SWANN AVENUE
SUITE 255
TAMPA, FL 33606

FIRE STATION 23
20770 TROUT CREEK DR.
TAMPA, FL 33647

DPW FILE NUMBER

DPW NUMBER
17-C-00037

ISSUE DATE
???

DRAWN BY
JAM

REVISIONS

SEAL
JESUS ANTONIO MERLY LICENSE No. 58113 STATE OF FLORIDA PROFESSIONAL ENGINEER
Jesus A. Merly, PE FL Reg No. 58113

Elevations shown within this plan set are based on North American Vertical Datum (NAVD 1988)

MASTER SITE PLAN

SHEET NUMBER:
C-1

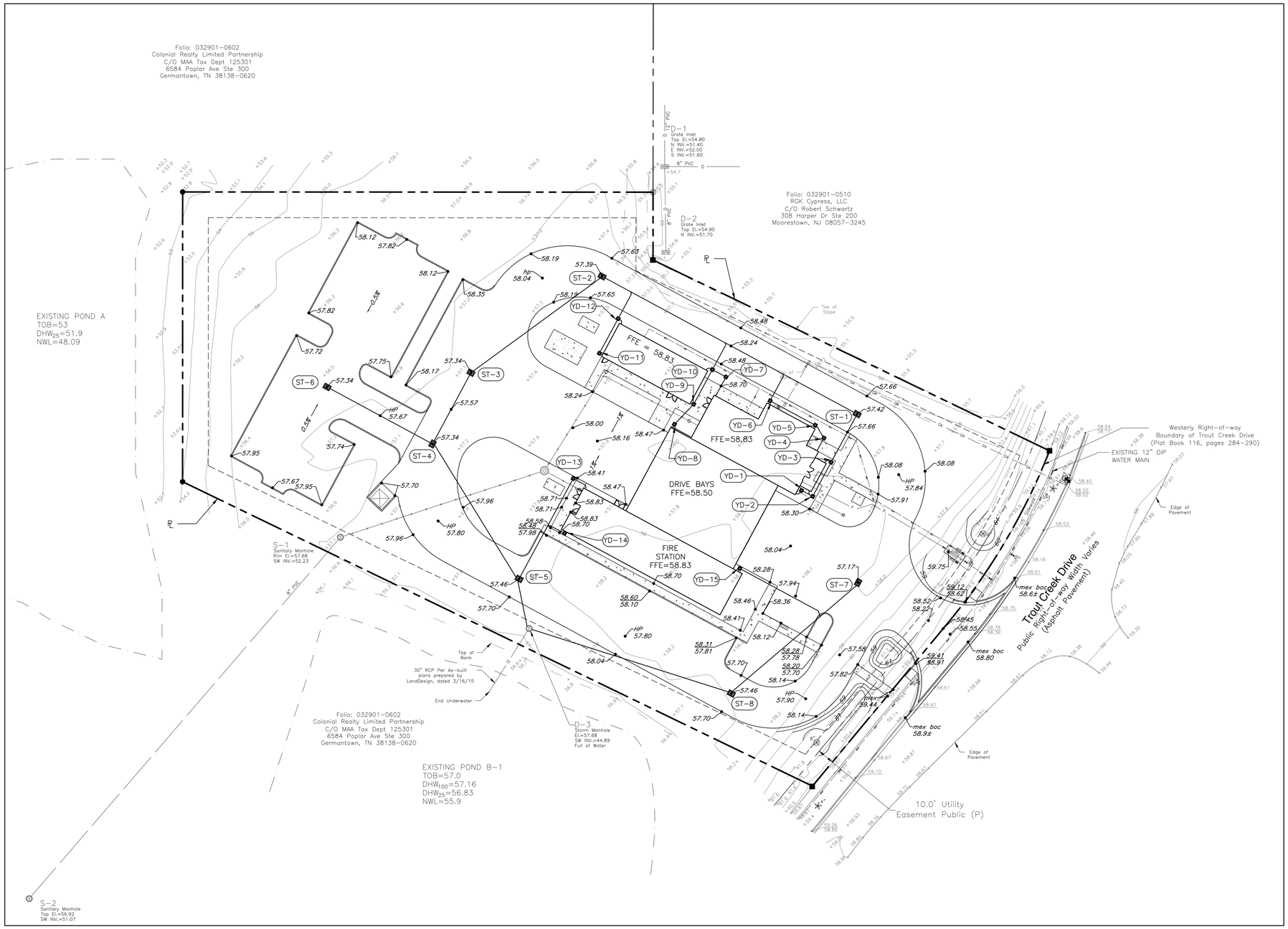

30 15 0 30 60

1"=30' FULL SIZE
1"=60' 11" X 17"

PAVING, GRADING AND DRAINAGE NOTES:

1. UNLESS DESIGNATED OTHERWISE ALL SPOT ELEVATIONS REFERENCE FINISHED PVMT ELEVATIONS. BACK OF CURB ELEVATIONS SHALL BE EQUAL TO THE FINISHED PAVEMENT ELEVATION PLUS THE HEIGHT OF THE PLANNED CURB.
2. CENTER OF CONCRETE BUMPER GUARD (WHEEL STOP) SHALL BE SET 30" FROM END OF PARKING STALL.
3. UNLESS DESIGNATED OTHERWISE ALL CURB SHOWN SHALL BE TYPE D PER FDOT STD INDEX 300.
4. DETECTABLE WARNING SURFACE (DWS) SHALL BE IN ACCORDANCE WITH FDOT DESIGN STANDARD INDEX 304. THE DWS SYSTEM SHALL CONSIST OF A PRODUCT ON THE FDOT QUALIFIED PRODUCT LIST FOR SPECIFICATION SECTION 527. COLOR SHALL BE RED.
5. UNLESS OTHERWISE NOTED CONSTRUCT SIDEWALK IN ACCORDANCE WITH FDOT STD INDEX 310

CALL 48 HOURS BEFORE YOU DIG
IT'S THE LAW! DIAL 811
811 Know what's below. Call before you dig.
SUNSHINE STATE ONE CALL OF FLORIDA, INC.

CITY OF TAMPA
CONTRACT ADMINISTRATION DEPARTMENT
PLANNING AND DESIGN DIVISION
306 E. JACKSON STREET 4 NORTH
TAMPA, FLORIDA 33602
p. 813. 274. 8456 – f. 813. 274. 8080
url: www.tampagov.net

James E. Jackson, Jr. AIA, NOMA
City Architect
Edward D. Rice, AIA
Project Architect
Kevin L. Herdica, AIA
Project Architect
Thomas A. Hester, Sr., AIA, NOMA
Project Architect
Kinsey C. Tillman
Drafting Technician
Jerry P. Sanders
Drafting Technician
Byron K. Thomas, LEED AP
Drafting Technician

MEP CONSULTANT
GRINER ENGINEERING, INC.
1628 1st. AVENUE NORTH
ST. PETERSBURG, FL 33713

STRUCTURAL CONSULTANT
BILLER REINHART
STRUCTURAL GROUP, INC.
4014 GUNN HWY. SUITE 248
TAMPA, FL 33713

CIVIL CONSULTANT
FBPR Certificate of Authorization No.: 26929
5M CIVIL LLC
12315 Wycliff Pl
Tampa, FL 33626
(813) 404-8872
www.5mcivil.com

LANDSCAPE CONSULTANT
DAVID CONNER & ASSOCIATES
1509 W. SWANN AVENUE
SUITE 255
TAMPA, FL 33606

FIRE STATION 23
20770 TROUT CREEK DR.
TAMPA, FL 33647

DPW FILE NUMBER
—

DPW NUMBER
17-C-00037

ISSUE DATE
???

DRAWN BY
JAM

REVISIONS
△
△
△

SEAL
JESUS ANTONIO MERLY LICENSE No. 58113 STATE OF FLORIDA PROFESSIONAL ENGINEER
Jesus A. Merly, PE FL Reg No. 58113

Elevations shown within this plan set are based on North American Vertical Datum (NAVD 1988)

PAVING, GRADING AND DRAINAGE PLAN

SHEET NUMBER:
C-2

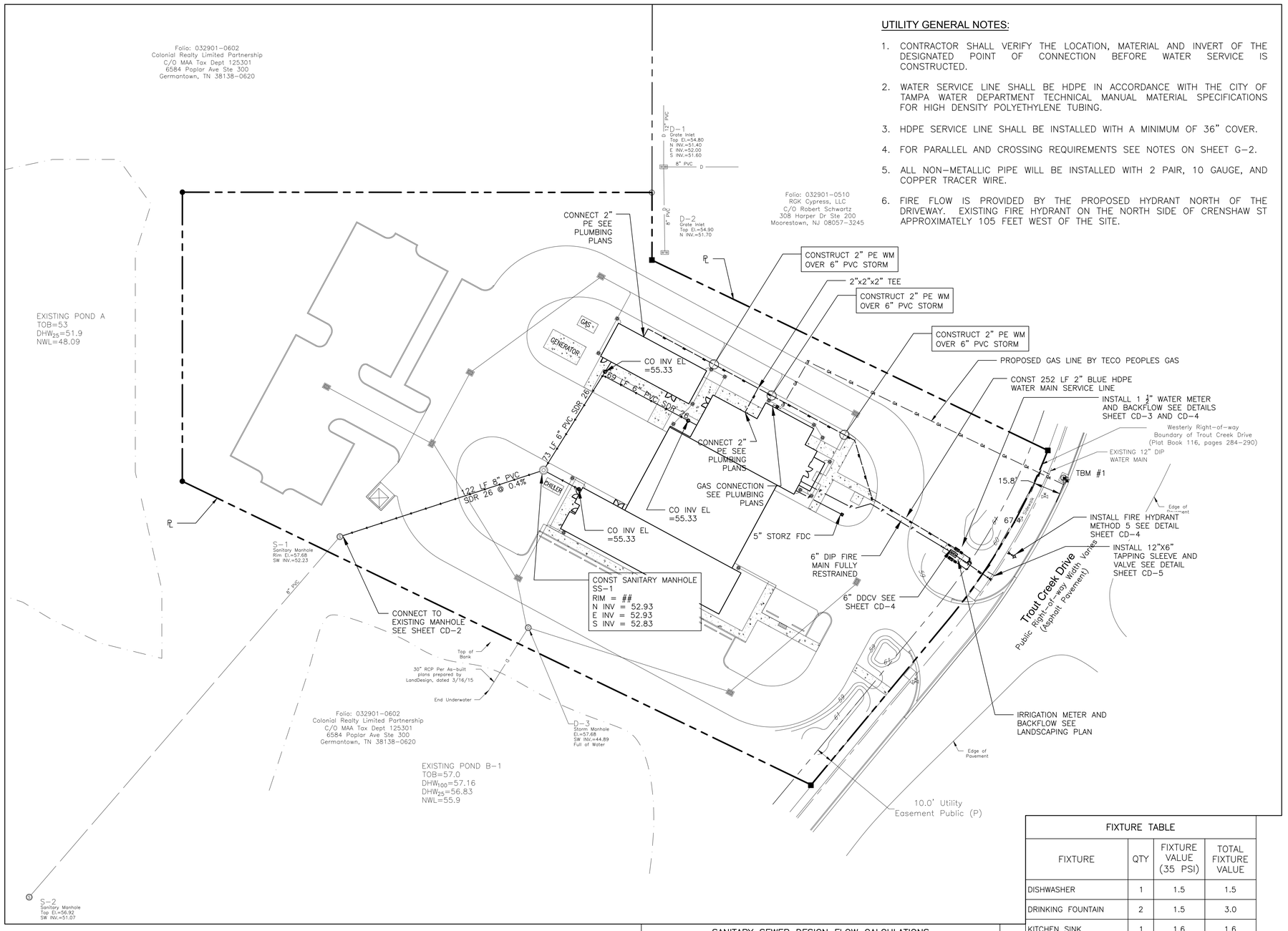

UTILITY GENERAL NOTES:

1. CONTRACTOR SHALL VERIFY THE LOCATION, MATERIAL AND INVERT OF THE DESIGNATED POINT OF CONNECTION BEFORE WATER SERVICE IS CONSTRUCTED.
2. WATER SERVICE LINE SHALL BE HDPE IN ACCORDANCE WITH THE CITY OF TAMPA WATER DEPARTMENT TECHNICAL MANUAL MATERIAL SPECIFICATIONS FOR HIGH DENSITY POLYETHYLENE TUBING.
3. HDPE SERVICE LINE SHALL BE INSTALLED WITH A MINIMUM OF 36" COVER.
4. FOR PARALLEL AND CROSSING REQUIREMENTS SEE NOTES ON SHEET G-2.
5. ALL NON-METALLIC PIPE WILL BE INSTALLED WITH 2 PAIR, 10 GAUGE, AND COPPER TRACER WIRE.
6. FIRE FLOW IS PROVIDED BY THE PROPOSED HYDRANT NORTH OF THE DRIVEWAY. EXISTING FIRE HYDRANT ON THE NORTH SIDE OF CRENSHAW ST APPROXIMATELY 105 FEET WEST OF THE SITE.

SANITARY SEWER DESIGN FLOW CALCULATIONS
(per FAC 64E-6.008)

TYPE OF ESTABLISHMENT	GPD/ UNIT	UNITS	GPD	
PUBLIC INSTITUTION				
(a) per person	100	12	1200	GPD
(b) add per meal prepared	5	36	180	GPD
AVERAGE DAILY FLOW			1380	GPD
MAX DAILY FLOW = ADF X 3.0 PEAK FACTOR			4140	GPD
PEAK HOURLY FLOW = ADF GPD/24 HR/60 MIN =			2.9	GPM

FIXTURE TABLE

FIXTURE	QTY	FIXTURE VALUE (35 PSI)	TOTAL FIXTURE VALUE
DISHWASHER	1	1.5	1.5
DRINKING FOUNTAIN	2	1.5	3.0
KITCHEN SINK	1	1.6	1.6
LAVATORY	7	1.1	7.7
OTHER SINK	2	3	6.0
SHOWER	5	1.8	9.0
URINAL WALL FLUSH VALVE	2	12	24.0
WASHING MACHINE	1	4	4.0
WATER CLOSET-VALVE	7	25	175.0
HOSE CONNECTION (¾")	5	10	50.0
COMBINED FIXTURE VALUE TOTAL			281.8
REQUIRED METER			1 1/2"

CALL 48 HOURS BEFORE YOU DIG
IT'S THE LAW! DIAL 811
811 Know what's below. Call before you dig.
SUNSHINE STATE ONE CALL OF FLORIDA, INC.

30 15 0 30 60
1"=30' FULL SIZE
1"=60' 11" X 17"

CITY OF TAMPA STANDARD WASTEWATER SERVICE NOTES:

A. AT LEAST 3 WEEKS PRIOR TO CONSTRUCTION, THE DEVELOPER'S REPRESENTATIVE SHALL NOTIFY THE RESIDENT ENGINEER AND THE CITY OF TAMPA, DEPARTMENT OF SANITARY SEWERS FIELD ENGINEERING OFFICE (242-5363) AND SUPPLY THEM WITH ALL THE REQUIRED SHOP DRAWINGS, THE CONTRACTOR'S NAME, STARTING DATE, PROJECTED SCHEDULE AND OTHER INFORMATION AS REQUIRED. THE FIELD ENGINEERING OFFICE SHOULD ALSO BE CONTACTED 5 DAYS PRIOR TO CONSTRUCTION TO ENSURE AVAILABILITY OF INSPECTION PERSONNEL. ANY WORK PERFORMED PRIOR TO NOTIFYING FIELD ENGINEERING OR WITHOUT A DEPARTMENT INSPECTOR PRESENT MAY BE SUBJECT TO REMOVAL AND REPLACEMENT.

B. THE CONTRACTOR SHALL PERFORM AN INFILTRATION/EXFILTRATION TEST ON ALL GRAVITY SEWERS AND A PRESSURE TEST ON ALL FORCE MAINS (AS APPLICABLE) IN ACCORDANCE TO CITY OF TAMPA REGULATIONS. SAID TESTS ARE TO BE CERTIFIED BY THE ENGINEER OF RECORD AND SUBMITTED TO THE CITY OF TAMPA DEPARTMENT OF SANITARY SEWERS FOR APPROVAL. THE SCHEDULING, COORDINATION AND NOTIFICATION TO ALL PARTIES IS THE CONTRACTOR'S RESPONSIBILITY.

C. ONE OR MORE OF THE FOLLOWING CERTIFICATES/SHOP DRAWINGS, DEPENDING ON THE TYPE OF CONNECTIONS, WILL BE REQUIRED. THIS SHOULD BE REVIEWED WITH THE DESIGN DIVISION PRIOR TO APPROVAL FOR CONSTRUCTION AND SUBMITTED IN ACCORDANCE WITH THE ABOVE NOTE #1.

a) DIP/PVC CERTIFICATE OF MANUFACTURE.
b) MANHOLE SHOP DRAWINGS AND STRENGTH REPORT.
c) FRAME AND COVER SHOP DRAWINGS.
d) FLEXIBLE COUPLING SHOP DRAWINGS.
e) CASING PIPE CERTIFICATE.
f) JACKING PIT DETAIL.
g) CRUSHED STONE SUBMITTAL.
h) VALVE SHOP DRAWING.
i) MANHOLE DROP CONNECTION DETAIL.

D. THE CERTIFICATE OF OCCUPANCY WILL NOT BE ISSUED UNTIL THE FOLLOWING HAS BEEN COMPLETED:

a) FINAL INSPECTION IN CONJUNCTION WITH DEPARTMENT PERSONNEL COMPLETED.
b) AS-BUILTS HAVE BEEN SUBMITTED AND ACCEPTED.
c) ALL NECESSARY TESTING COMPLETED AND CERTIFIED.
d) PAYMENT OF ALL CAPACITY FEES.
e) ISSUANCE OF FDEP CERTIFICATION OF COMPLETION APPROVAL (IF APPLICABLE)

NOTES FOR PUBLIC WATER MAIN CONSTRUCTION (from TAP to METER)

1. **WET TAP TO BE PERFORMED BY CITY OF TAMPA WATER DEPARTMENT AUTHORIZED PERSONNEL ONLY.**
2. PAINT ABOVE GROUND PIPING PER TAMPA WATER DEPARTMENT (TWD) STANDARDS.
3. CONTRACTOR TO F&I, PRESSURE TEST, AND CALL CITY TO WITNESS PRESSURE TEST. CALL HARRY GLENN AT 813-635-3432 TO SCHEDULE TAP WITHIN 10 WORKING DAYS NOTICE.
4. CONTRACTOR TO F&I METER SERVICE & METER BOX PER DETAILS 5.12. TWD TO PROVIDE METER AFTER PUBLIC WATER MAIN INSTALLATION IS ACCEPTED BY CITY.

CITY OF TAMPA (PUBLIC) WATER SYSTEM NOTES

1. ALL WATER WORK FOR THE CITY SHALL BE PERFORMED IN ACCORDANCE WITH THE TAMPA WATER DEPARTMENT TECHNICAL MANUAL (LATEST EDITION) AND WITH ALL CONSTRUCTION DETAILS THEREIN. THE DETAILS AND STANDARDS DESCRIBED SHALL BE CONSIDERED A PART OF THE CONTRACT DOCUMENTS FOR THIS PROJECT.
2. PRIOR TO PRE-CONSTRUCTION MEETING WITH WATER DEPARTMENT, CONTRACTOR SHALL OBTAIN THE CURRENT "TAMPA WATER DEPARTMENT TECHNICAL MANUAL". ALL DEVELOPER INSTALLED CONSTRUCTION, MATERIALS AND WORKMANSHIP ARE TO CONFORM WITH THE LATEST CITY OF TAMPA SPECIFICATIONS, AS OUTLINED IN TECHNICAL MANUAL.
3. CONSTRUCTION OF ANY WATER FACILITIES TO BE CITY-OWNED SHALL BE COORDINATED WITH THE WATER DEPARTMENT PRIOR TO THE START OF CONSTRUCTION. CONTRACTOR TO CONTACT COT CONTRACT ADMINISTRATION DEPARTMENT @ 635-3432 TO COORDINATE/SCHEDULE A PRE-CONSTRUCTION MEETING WITH THE CITY, FOR REVIEW OF INSTALLATION TECHNIQUES AND PROCEDURES, A MINIMUM OF 10 WORKING DAYS PRIOR TO THE PLANNED CONSTRUCTION.

CITY OF TAMPA
CONTRACT ADMINISTRATION DEPARTMENT
PLANNING AND DESIGN DIVISION
306 E. JACKSON STREET 4 NORTH
TAMPA, FLORIDA 33602
p. 813. 274. 8456 - f. 813. 274. 8080
url: www.tampagov.net

James E. Jackson, Jr. AIA, NOMA
City Architect
Edward D. Rice, AIA
Project Architect
Kevin L. Herlica, AIA
Project Architect
Thomas A. Hester, Sr., AIA, NOMA
Project Architect
Kinsey C. Tillman
Drafting Technician
Jerry P. Sanders
Drafting Technician
Byron K. Thomas, LEED AP
Drafting Technician

MEP CONSULTANT
GRINER ENGINEERING, INC.
1628 1st. AVENUE NORTH
ST. PETERSBURG, FL 33713

STRUCTURAL CONSULTANT
BILLER REINHART
STRUCTURAL GROUP, INC.
4014 GUNN HWY. SUITE 248
TAMPA, FL 33713

CIVIL CONSULTANT
FBPR Certificate of Authorization No.: 26929
5M CIVIL LLC
12315 Wycliff Pl
Tampa, FL 33626
(813) 404-8872
www.5mcivil.com

LANDSCAPE CONSULTANT
DAVID CONNER & ASSOCIATES
1509 W. SWANN AVENUE
SUITE 255
TAMPA, FL 33606

FIRE STATION 23
20770 TROUT CREEK DR.
TAMPA, FL 33647

DPW FILE NUMBER

DPW NUMBER
17-C-00037

ISSUE DATE
???

DRAWN BY
JAM

REVISIONS

SEAL
JESUS ANTONIO MERLY LICENSED No. 58113 STATE OF FLORIDA PROFESSIONAL ENGINEER
Jesus A. Merly, PE FL Reg No. 58113

Elevations shown within this plan set are based on North American Vertical Datum (NAVD 1988)

UTILITY PLAN

SHEET NUMBER:
C-3

CONCRETE PAVEMENT NOTES AND SPECIFICATIONS

CONVENTIONAL CONCRETE NOTES

GENERAL NOTES

1. USE AMERICAN CONCRETE INSTITUTE (ACI) CERTIFIED FLATWORK FINISHER.
2. USE ACI 330 GUIDE FOR DESIGN AND CONSTRUCTION OF CONCRETE PARKING LOTS.
3. USE ACI 330.1 STANDARD SPECIFICATION FOR UNREINFORCED CONCRETE PARKING LOTS.
4. ALL CONCRETE USED IN PARKING LOT, UNLESS OTHERWISE INDICATED, SHALL HAVE A COMPRESSIVE STRENGTH OF 4,000 PSI AT 28 DAYS.
5. PREPARE THE SUBGRADE IN ACCORDANCE WITH THE GEOTECHNICAL ENGINEEER'S RECOMMENDATIONS FOR RIGID PAVEMENTS. SUBGRADE SOIL DENSITY TESTING MUST BE COMPLETED AND VERIFIED BY THE GEOTECHNICAL ENGINEER PRIOR TO CONCRETE PLACEMENT.
6. IMPORTED SOIL USE FOR BACK FILL SHOULD BE FREE OF HEAVY CLAY, SILTS, STONES, PLANT ROOT OR OTHER FOREIGN MATERIAL GREATER THAN 1½" IN DIAMETER IN ORDER TO ACHIEVE ADEQUATE COMPACTION AROUND ANY FIXED OBJECT IN GROUND. ALTERNATE WILL BE TO USE FLOWABLE FILL.
7. CURE CONCRETE IMMEDIATELY AFTER FINISHING OPERATION IS COMPLETED BY USING ONE OF THE FOLLOWING METHODS: WATER, PIGMENTED WATER-BASED CURING COMPOUND OR VISQUEEN AND BURLAP.

COMPACTED SUBGRADE

8. THE TOP 12 INCHES SHALL BE COMPOSED OF GRANULAR OR GRAVELY SOIL THAT IS PREDOMINANTLY SAND. SUBGRADE SHALL BE PLACED IN 6" LIFTS. SUBGRADE SHALL BE MOIST WITHOUT FREESTANDING WATER WHEN PLACING CONCRETE.
9. SUBGRADE FOR PAVEMENT AREAS SHALL BE COMPACTED TO A MINIMUM OF 95% MODIFIED PROCTOR FOR A MINIMUM DEPTH OF 12 INCHES.

JOINT SPACING DETERMINATION

10. KEEP ALL JOINTS CONTINUOUS.
11. CONTROL JOINTS SHALL BE FORMED OR SAWED WITHIN 12 HOURS FROM TIME OF PLACEMENT.
12. MAXIMUM SPACING IS 15 FEET.

CURBS

13. ALL CURBING SHALL BE CONSTRUCTED OF CONCRETE THAT WILL OBTAIN A MINIMUM COMPRESSIVE STRENGTH OF 2,500 PSI AT 28 DAYS
14. ALL CONCRETE CURBS SHALL BE SPACED WITH A FULL-DEPTH, ½" WIDTH ISOLATION JOINT MATERIAL PRIOR TO PLACEMENT OF ADJACENT CONCRETE PAVEMENT
15. THERE SHALL BE CONTROL JOINTS, EITHER TOOL OR SAW-CUT, MATCH PAVEMENT JOINTS, UNLESS OTHERWISE SPECIFIED; JOINTS SHALL BE FORMED WITHIN 12 HOURS OF PLACEMENT.
16. ALL CURB ENDS THAT DO NOT TIE INTO OTHER FACILITIES SHALL TRANSITION DOWN TO PAVEMENT GRADE IN 24 INCHES.
17. CONSTRUCTION JOINT SHALL BE TIED WITH A No.4 TIE BAR EXTENDED 6 INCHES INTO EACH CURB SECTION AND SHALL BE SPACED WITH A FULL-DEPTH ½" WIDTH ISOLATION JOINT MATERIAL.

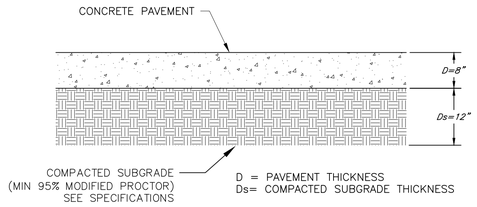

1 / CD-1 TYPICAL SECTION CLASS-1 CONCRETE
NOT TO SCALE

JOINT LAYOUT PLAN

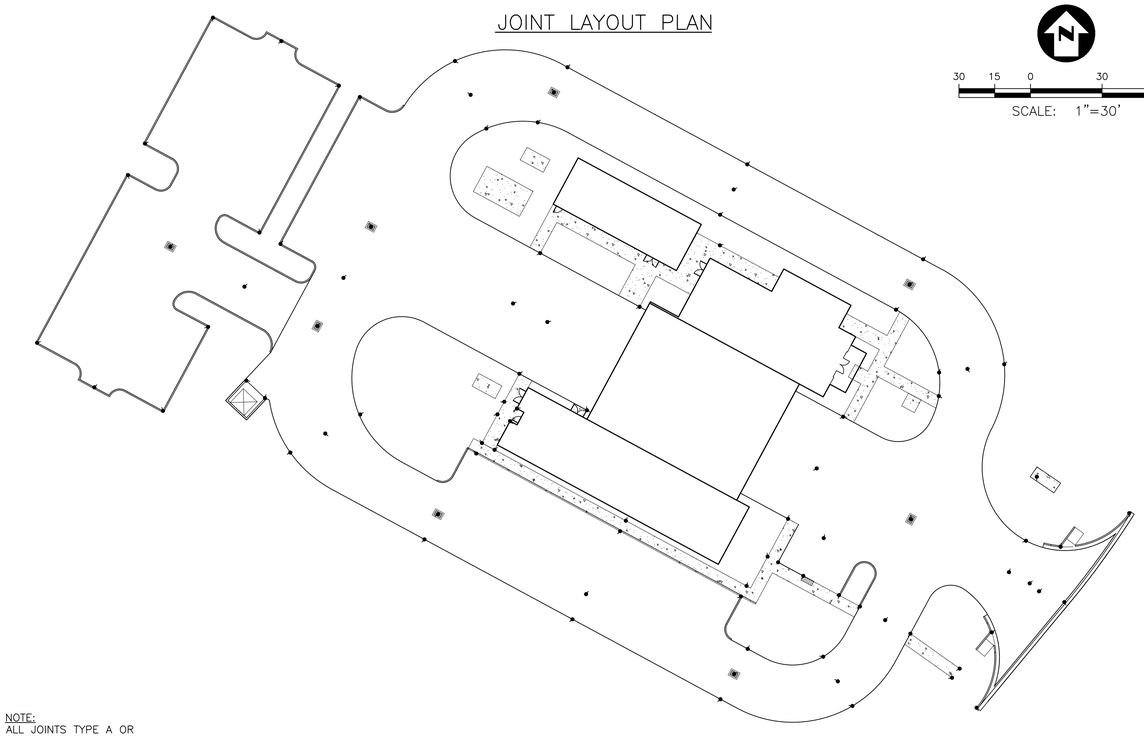

SCALE: 1"=30'

NOTE:
ALL JOINTS TYPE A OR CONSTRUCTION JOINT AT CONTRACTOR'S OPTION UNLESS NOTED OTHERWISE.

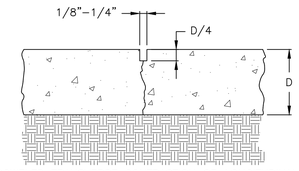

UNDOWELED TRANSVERSE CONTRACTION OR LONGITUDINAL JOINT, SAWED OR PRE-MOLDED. DO NOT DOWEL PAVEMENTS LESS THAN 7" THICK

TYPICAL SECTION- TYPE 'A' CONTRACTION JOINT
N.T.S.

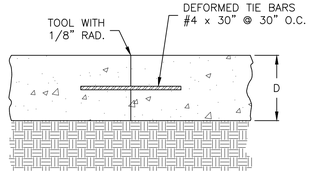

TIED LONGITUDINAL CONSTRUCTION OR CONTRACTION JOINT WHERE REQUIRED. NOTE: DO NOT TIE MORE THAN THREE LANES TOGETHER.

TYPICAL SECTION- TYPE 'B' TIED JOINT
N.T.S.

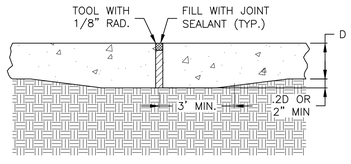

ISOLATION JOINT FOR PAVEMENTS LESS THAN 8" THICK.

TYPICAL SECTION- TYPE 'D' BUTT JOINT
N.T.S.

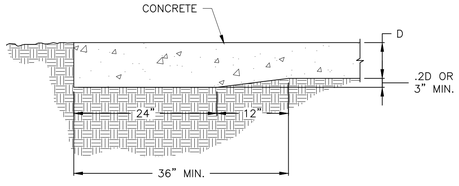

TYPICAL SECTION- THICKENED EDGE
N.T.S.

2 / CD-1 CONVENTIONAL CONCRETE JOINT DETAILS
NOT TO SCALE

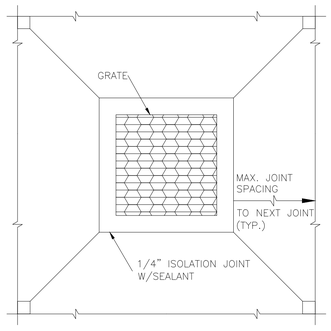

3 / CD-1 TYPICAL JOINTS AT INLETS DETAIL
NOT TO SCALE

PAVEMENT DESIGN			
LAYER	C	THICKNESS (IN)	SNI
TYPE SP-9.5 AC	0.44	1.5	0.66
CRUSHED CONCRETE (LBR 100)	0.18	6	1.08
STABILIZED SUBGRADE (LBR 40)	0.08	8	0.64
		TOTAL	2.38

4 / CD-1 ASPHALT PAVEMENT DESIGN
NOT TO SCALE

STORM DRAINAGE STRUCTURE SCHEDULE

STRUCTURE	TYPE	INV (N)	INV (S)	INV (W)	INV (E)	RIM OR GRT EL	DOWNSTREAM PIPE
ST-1	TYPE C DBI FDOT STD INDEX 232	---	99.99	99.99	---	57.42	N/A
ST-2	TYPE C DBI FDOT STD INDEX 232	---	99.99	---	99.99	57.39	18" RCP
ST-3	TYPE C DBI FDOT STD INDEX 232	99.99	99.99	---	---	57.34	18" RCP
ST-4	TYPE C DBI FDOT STD INDEX 232	99.99	---	99.99	99.99	57.34	18" RCP
ST-5	TYPE C DBI FDOT STD INDEX 232	99.99	99.99	99.99	---	57.46	18" RCP
ST-6	TYPE C DBI FDOT STD INDEX 232	---	---	---	99.99	57.34	18" RCP
ST-7	TYPE C DBI FDOT STD INDEX 232	---	99.99	---	---	57.17	18" RCP
ST-8	TYPE C DBI FDOT STD INDEX 232	99.99	---	99.99	---	57.46	18" RCP
YD-1	12" DIAMETER YARD DRAIN PER FDOT STD INDEX 282 SHEET 3 OF 3	---	---	---	99.99	99.99	12" PVC SCH 40
YD-2	12" DIAMETER YARD DRAIN PER FDOT STD INDEX 282 SHEET 3 OF 3	99.99	---	99.99	---	99.99	12" PVC SCH 40
YD-3	12" DIAMETER YARD DRAIN PER FDOT STD INDEX 282 SHEET 3 OF 3	99.99	99.99	---	---	99.99	12" PVC SCH 40
YD-4	12" DIAMETER YARD DRAIN PER FDOT STD INDEX 282 SHEET 3 OF 3	99.99	99.99	---	---	99.99	12" PVC SCH 40
YD-5	12" DIAMETER YARD DRAIN PER FDOT STD INDEX 282 SHEET 3 OF 3	---	---	99.99	99.99	99.99	12" PVC SCH 40
YD-6	12" DIAMETER YARD DRAIN PER FDOT STD INDEX 282 SHEET 3 OF 3	99.99	---	---	99.99	99.99	12" PVC SCH 40
YD-7	12" DIAMETER YARD DRAIN PER FDOT STD INDEX 282 SHEET 3 OF 3	---	99.99	99.99	---	99.99	12" PVC SCH 40
YD-8	12" DIAMETER YARD DRAIN PER FDOT STD INDEX 282 SHEET 3 OF 3	99.99	---	---	---	99.99	12" PVC SCH 40
YD-9	12" DIAMETER YARD DRAIN PER FDOT STD INDEX 282 SHEET 3 OF 3	99.99	99.99	---	---	99.99	12" PVC SCH 40
YD-10	12" DIAMETER YARD DRAIN PER FDOT STD INDEX 282 SHEET 3 OF 3	99.99	99.99	---	99.99	99.99	12" PVC SCH 40
YD-11	12" DIAMETER YARD DRAIN PER FDOT STD INDEX 282 SHEET 3 OF 3	99.99	---	---	---	99.99	12" PVC SCH 40
YD-12	12" DIAMETER YARD DRAIN PER FDOT STD INDEX 282 SHEET 3 OF 3	99.99	99.99	---	---	99.99	12" PVC SCH 40
YD-13	12" DIAMETER YARD DRAIN PER FDOT STD INDEX 282 SHEET 3 OF 3	---	99.99	---	99.99	99.99	12" PVC SCH 40
YD-14	12" DIAMETER YARD DRAIN PER FDOT STD INDEX 282 SHEET 3 OF 3	---	---	99.99	---	99.99	12" PVC SCH 40
YD-15	12" DIAMETER YARD DRAIN PER FDOT STD INDEX 282 SHEET 3 OF 3	---	---	---	99.99	99.99	12" PVC SCH 40

CITY OF TAMPA
CONTRACT ADMINISTRATION DEPARTMENT
PLANNING AND DESIGN DIVISION
306 E. JACKSON STREET 4 NORTH
TAMPA, FLORIDA 33602
p. 813. 274. 8456 - f. 813. 274. 8080
url: www.tampagov.net

James E. Jackson, Jr. AIA, NOMA
City Architect
Edward D. Rice, AIA
Project Architect
Kevin L. Henika, AIA
Project Architect
Thomas A. Hester, Sr., AIA, NOMA
Project Architect
Kinsey C. Tillman
Drafting Technician
Jerry P. Sanders
Drafting Technician
Byron K. Thomas, LEED AP
Drafting Technician

MEP CONSULTANT
GRINER ENGINEERING, INC.
1628 1st. AVENUE NORTH
ST. PETERSBURG, FL 33713

STRUCTURAL CONSULTANT
BILLER REINHART
STRUCTURAL GROUP, INC.
4014 GUNN HWY. SUITE 248
TAMPA, FL 33713

CIVIL CONSULTANT
FBPR Certificate of Authorization No.: 26929
5M CIVIL LLC
12315 Wycliff Pl
Tampa, FL 33626
(813) 404-8872
www.5mcivil.com

LANDSCAPE CONSULTANT
DAVID CONNER & ASSOCIATES
1509 W. SWANN AVENUE
SUITE 255
TAMPA, FL 33606

FIRE STATION 23
20770 TROUT CREEK DR.
TAMPA, FL 33647

DPW FILE NUMBER

DPW NUMBER
17-C-00037

ISSUE DATE
???

DRAWN BY
JAM

REVISIONS

SEAL

JESUS ANTONIO MERLY LICENSE No. 58113 STATE OF FLORIDA PROFESSIONAL ENGINEER

Jesus A. Merly, PE FL Reg No. 58113

Elevations shown within this plan set are based on North American Vertical Datum (NAVD 1988)

PAVING, GRADING AND DRAINAGE DETAILS

SHEET NUMBER:
CD-1

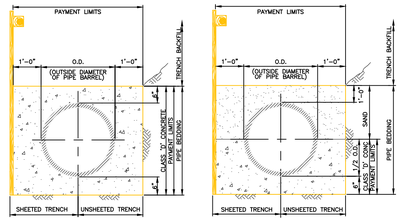

CONCRETE ENCASEMENT

CLASS A BEDDING (CONCRETE CRADLE)

NOTES:

1. ALL TYPES OF PIPE BEDDING SHALL EXTEND TO UNDISTURBED EARTH AT SIDES AND BOTTOM OF THE TRENCH.
2. SAND AND CRUSHED STONE PIPE BEDDING SHALL BE PLACED AND COMPACTED IN ACCORDANCE WITH SPECIFICATIONS.

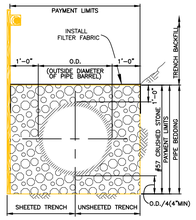

CLASS B-I BEDDING

PIPE BEDDING DETAILS
N.T.S.

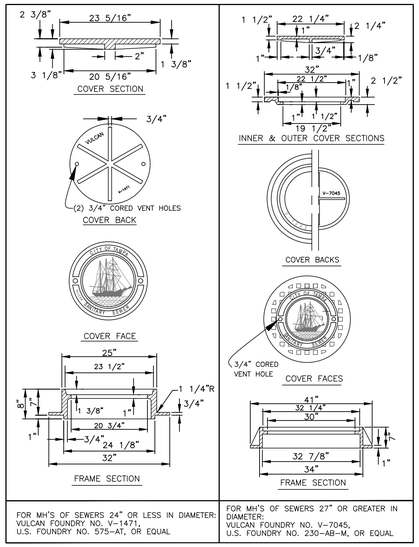

FOR MH'S OF SEWERS 24" OR LESS IN DIAMETER:	FOR MH'S OF SEWERS 27" OR GREATER IN DIAMETER:
VULCAN FOUNDRY NO. V-1471, U.S. FOUNDRY NO. 575-AT, OR EQUAL	VULCAN FOUNDRY NO. V-7045, U.S. FOUNDRY NO. 230-AB-M, OR EQUAL

HEAVY DUTY CAST IRON MANHOLE
FRAME & COVER DETAILS
N.T.S.

JACINTO CARLOS FERRAS, P.E. #49454 DESIGN DIVISION HEAD WASTEWATER DEPARTMENT	No.	DATE	REVISIONS	DES: DR DRN: BL CKD: DATE:	CITY of TAMPA WASTEWATER DEPARTMENT	STANDARD DETAILS MISC. GRAVITY DETAILS	W.O. SHEET 5 OF 15
	3						
	2						
	1						

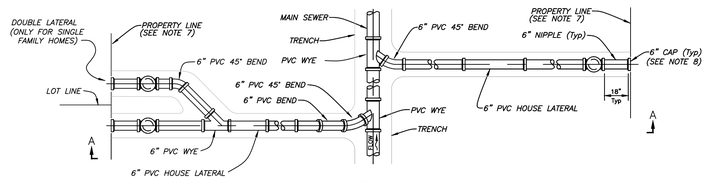

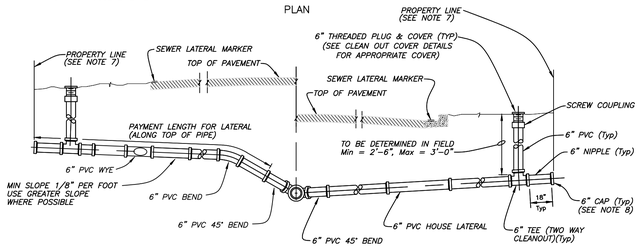

TYPE A HOUSE LATERAL DETAIL
Not to Scale

NOTES:

1. *The locations of house laterals by symbols on plans are approximate only and the actual location and slopes will be determined in the field by the contractor with the approval of the engineer.*
2. *The minimum diameter of all house laterals shall be 6 inches.*
3. *The vertical alignment of the service lateral shall be designed so that no more than two (2) vertical bends are required between the connection to the gravity main and the property line.*
4. *House laterals which pass under drainage ditches with less than 18" of cover or which have less than 30" of cover under pavement shall be Pressure Class 350 with 40 mils (MDFT) of Protecto 401 interior coating per specifications.*
5. *A minimum vertical clearance of 12-inches shall be provided when crossing above a water main. However, a vertical clearance less than 12-inches but greater than 6-inches will be allowed if the lateral is installed using one the following criteria:*
   - *The lateral is constructed of ductile iron pipe with a minimum pressure class of 350 with 40 mils (MDFT) of Protecto 401 interior coating.*
   - *The lateral is encased in at least 4-inches of concrete.*
   - *The lateral is installed in a casing pipe with an impact strength equal to the impact strength of pressure class 350 ductile iron.*

   A minimum of 6-inches of vertical clearance shall be provided when crossing below water mains with a diameter 6-inches or less. A minimum of 12-inches of clearance shall be provided when crossing below a water main with a diameter greater than 6-inches up to a diameter of 18-inches. A minimum of 18-inches of vertical clearance will be required when crossing under a water main with diameters greater than 18-inches.

   At all water main crossings, joints of the lateral pipe at the crossing shall be arranged so that no joint is within 6-ft of a joint along the water main. If the joint spacing can not be achieved, then the gravity sewer at the crossing shall be constructed of C-900 PVC.

   A minimum vertical clearance of 6-inches shall be provided when crossing above all utilities other than a water main. A minimum of 6-inches of vertical clearance shall be provided when crossing below a utility with a diameter 6-inches or less. A minimum of 12-inches of clearance shall be provided when crossing below a utility with a diameter greater than 6-inches up to a diameter of 18-inches. A minimum of 18-inches of vertical clearance will be required when crossing under utilities with diameters greater than 18-inches.
6. *Transitions from SDR 35 PVC to either C900 or ductile iron pipes shall be made with PVC rigid adaptors. Transitions from SDR 35 PVC to either existing clay or concrete pipes shall be made with a Fernco 1000 series flexible coupling with stainless steel shear ring or approved equal.*
7. *In sub-divisions where the Developer has provided a recorded utility easement (typically 10') beyond the property line, the clean out shall be installed within the easement away from the sidewalk.*
8. *At the direction of the City's inspector, the contractor shall temporarily stake the cap of all laterals at the property line with a 2"x4" treated wood stake.*
9. *Double laterals are only allowed for single family homes on single lots.*

JACINTO CARLOS FERRAS, P.E. #49454 DESIGN DIVISION HEAD WASTEWATER DEPARTMENT	No.	DATE	REVISIONS	DES: DR DRN: BL CKD: DATE:	CITY of TAMPA WASTEWATER DEPARTMENT	STANDARD DETAILS NEW LATERAL CONNECTIONS	W.O. SHEET 6 OF 15
	3						
	2						
	1						

CITY OF TAMPA
CONTRACT ADMINISTRATION DEPARTMENT
PLANNING AND DESIGN DIVISION
306 E JACKSON STREET 4 NORTH
TAMPA, FLORIDA 33602
p: 813. 274. 8456 – f: 813. 274. 8080
url: www.tampagov.net

James E. Jackson, Jr. AIA, NOMA
City Architect
Edward D. Rice, AIA
Project Architect
Kevin L. Henika, AIA
Project Architect
Thomas A. Hester, Sr., AIA, NOMA
Project Architect
Kinsey C. Tillman
Drafting Technician
Jerry P. Sanders
Drafting Technician
Byron K. Thomas, LEED AP
Drafting Technician

MEP CONSULTANT
GRINER ENGINEERING, INC.
1628 1st. AVENUE NORTH
ST. PETERSBURG, FL 33713

STRUCTURAL CONSULTANT
BILLER REINHART
STRUCTURAL GROUP, INC.
4014 GUNN HWY. SUITE 248
TAMPA, FL 33713

CIVIL CONSULTANT
FBPR Certificate of Authorization No.: 26929
5M CIVIL LLC
12315 Wycliff Pl
Tampa, FL 33626
(813) 404-8872
www.5mcivil.com

LANDSCAPE CONSULTANT
DAVID CONNER & ASSOCIATES
1509 W. SWANN AVENUE
SUITE 255
TAMPA, FL 33606

FIRE STATION 23
20770 TROUT CREEK DR.
TAMPA, FL 33647

DPW FILE NUMBER

DPW NUMBER
17-C-00037

ISSUE DATE
???

DRAWN BY
JAM

REVISIONS

SEAL
JESUS ANTONIO MERLY LICENSE No. 58113 STATE OF FLORIDA PROFESSIONAL ENGINEER
Jesus A. Merly, PE FL Reg No. 58113

Elevations shown within this plan set are based on North American Vertical Datum (NAVD 1988)

WASTEWATER DETAILS

SHEET NUMBER:
CD-2

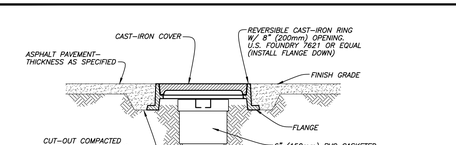

CLEAN-OUT W/ COVER FOR ASPHALT PAVED AREAS
Not to Scale

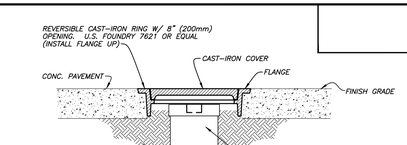

CLEAN-OUT W/ COVER FOR CONCRETE PAVED AREAS
Not to Scale

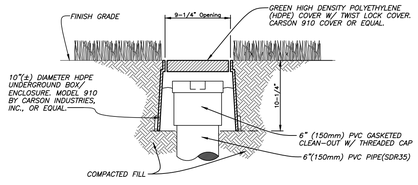

CLEAN-OUT W/ COVER FOR GRASS (NON-VEHICULAR TRAFFIC) AREAS
Not to Scale

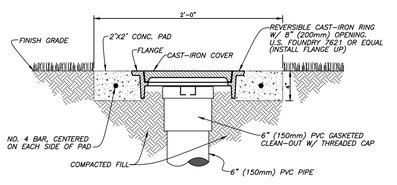

CLEAN-OUT W/COVER FOR GRASSED AREAS W/VEHICULAR TRAFFIC
Not to Scale

NOTES:

1. *Contractor shall adjust the clean-out and cast iron ring and cover or HDPE box and cover so that the cover is seated securely and the top of the cover is flush with the finish grade. The PVC cap of the clean-out shall be no more than 4 inches deeper than the finish grade.*
2. *PVC cap may be provided with recessed nut.*
3. *Cast iron cover shall be provided with an embossed letter "S" for identification, HDPE cover shall be marked "SEWER" for identification.*
4. *Cast iron ring and cover, or HDPE box and cover, as well as the four (4 sf) square feet of material (concrete or asphalt around the clean-out), are part of the clean out installation and cost shall be included within the unit price for clean-out with no additional payment.*
5. *All clean-outs on this project shall be one of the four types shown on this sheet. Field conditions will determine which type.*

CLEANOUT COVER DETAILS
Not to Scale

JACINTO CARLOS FERRAS, P.E. #49454 DESIGN DIVISION HEAD WASTEWATER DEPARTMENT	No.	DATE	REVISIONS	DES: DRN: BL CKD: DATE:	CITY of TAMPA WASTEWATER DEPARTMENT	STANDARD DETAILS CLEANOUT COVER DETAILS	W.O. SHEET 8 OF 15
	3						
	2						
	1						

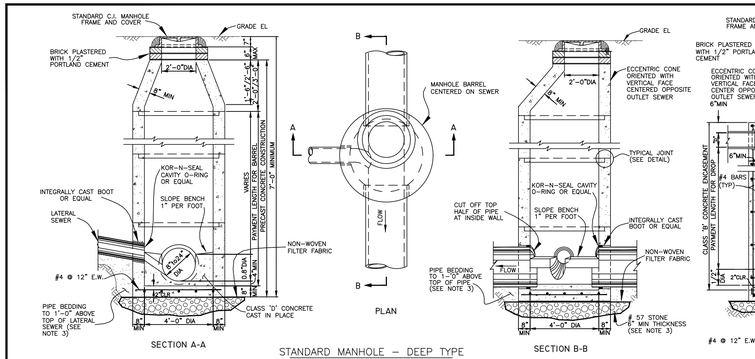

STANDARD MANHOLE – DEEP TYPE
FOR SEWERS 24" OR LESS IN DIAMETER
N.T.S

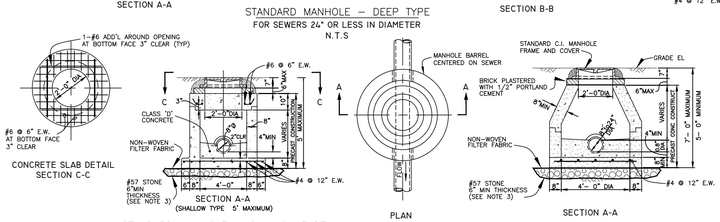

STANDARD MANHOLE – SHALLOW TYPE
FOR SEWERS 24" OR LESS IN DIAMETER
N.T.S

NOTES

1. REINFORCING STEEL FOR ALL MANHOLES SHALL CONFORM TO ASTM-C478 AND PLACED AS DESCRIBED IN THE SPECIFICATIONS.
2. ALL PIPE STUBS FROM MANHOLES FOR FUTURE CONNECTIONS OR OTHER CONTRACT DIVISIONS SHALL BE PROVIDED WITH WATER TIGHT PLUGS PLACED FROM WITHIN THE MANHOLE.
3. SEE SPECIFICATIONS FOR MATERIALS REQUIREMENTS AND PLACEMENTS AND COMPACTION OF PIPE AND STRUCTURE BEDDING.
4. STANDARD SHALLOW-TYPE MANHOLES WITH DEPTHS BETWEEN A MAXIMUM OF 7'-0" AND A MINIMUM OF 5'-0" MUST HAVE A CONCRETE CONE FOR THE TOP SECTION.
5. ALL MANHOLE JOINTS MUST BE SEALED WITH AN ACCEPTABLE JOINT SEALING COMPOUND REGARDLESS OF WHETHER AN O-RING GASKET IN A PREFORMED GROOVE IS USED.
6. FILTER FABRIC SHALL BE NON-WOVEN FABRIC PER D.O.T. SPECIFICATION SECTIONS 514 AND 985 AND SHALL BE WRAPPED ENTIRELY AROUND THE #57 STONE.

STANDARD DROP MANHOLE
FOR SEWERS 24" OR LESS IN DIAMETER
N.T.S

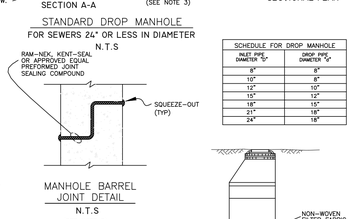

SCHEDULE FOR DROP MANHOLE	
INLET PIPE DIAMETER "S"	DROP PIPE DIAMETER "d"
8"	8"
10"	8"
12"	10"
15"	12"
18"	15"
21"	18"
24"	18"

JACINTO CARLOS FERRAS, P.E. #49454 DESIGN DIVISION HEAD WASTEWATER DEPARTMENT	No.	DATE	REVISIONS	DES: DRN: BL CKD: DATE:	CITY of TAMPA WASTEWATER DEPARTMENT	STANDARD DETAILS STANDARD MANHOLE 8" TO 24"	W.O. SHEET 9 OF 15
	3						
	2						
	1						

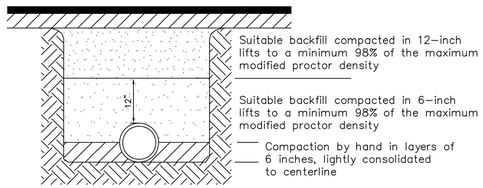

NOTES:

1. Type 2 trench is defined as a flat–bottom trench. Lightly consolidate backfill to centerline of pipe.
2. This standard shall be utilized in the absence of specific standards. The standard of the agency controlling the Right–of–Way shall govern unless otherwise directed by the Engineer.
3. Suitable backfill shall be defined as material free from cinders, ashes, refuse, clay, organic matter, boulders, rocks or stones, or other material that in the opinion of the Engineer is unsuitable.
4. Non–pervious areas shall mean any concrete or asphalt curb, sidewalk, trail, driveway, or roadway.

TAMPA WATER DEPARTMENT	APPROVED Sept. 2011	REVISED	TRENCHING, BEDDING AND BACKFILL DETAIL FOR NON–PERVIOUS (paved) AREAS	2.01

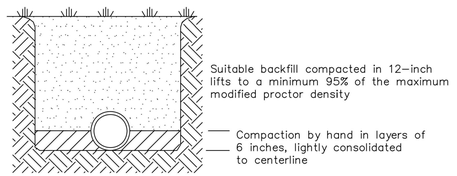

NOTES:

1. Type 2 trench is defined as a flat–bottom trench. Lightly consolidate backfill to centerline of pipe.
2. This standard shall be utilized in the absence of specific standards. The standard of the agency controlling the Right–of–Way shall govern unless otherwise directed by the Engineer.
3. Suitable backfill shall be defined as material free from cinders, ashes, refuse, clay, organic matter, boulders, rocks or stones, or other material that in the opinion of the Engineer is unsuitable.
4. Non–paved area is a pervious area. If any part of the trench is within a concrete or asphalt curb, sidewalk, driveway, or roadway, then Standard Detail 2.01 applies.

TAMPA WATER DEPARTMENT	APPROVED Sept. 2011	REVISED	TRENCHING, BEDDING AND BACKFILL DETAIL FOR PERVIOUS (non–paved) AREAS	2.02

METHOD A

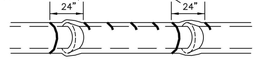

Polyethylene tube is cut into lengths approximately two feet longer than the pipe section and placed around it. After the pipe joint is assembled, the polyethylene tube is made to overlap the joint and the overlap secured in place. Since the tube is considerably larger than the barrel of pipe, it is made to fit snugly by folding over at the top and securing with tape every 24" along the pipe section.

METHOD B

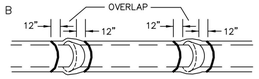

Polyethylene tube is cut one foot shorter than the length of the pipe section. After placement of the pipe, it is folded and secured snugly overall. A three foot length of polyethylene tube placed over the end of the preceeding section is then pulled in place over the joint after assembly and secured.

METHOD C

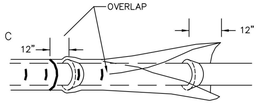

Polyethylene sheet is cut to a length two feet longer than the pipe section. The sheet is wrapped around the pipe so that it overlaps circumferentially over the top quadrant of the pipe, then secured. After joint assembly, the surplus length of polyethylene film is secured around the joint, providing an overlap of each joint. Tape at each joint and at 3' intervals in between.

NOTES: 1. Use blue polyethylene film and tape only.
2. Polyethylene film shall be a minimum of 8 mil. thickness.
3. Spiral Wrap not required with polywrap.

TAMPA WATER DEPARTMENT	APPROVED Sept. 2011	REVISED JRD 4/09, JRD 9/2011	POLYETHYLENE ENCASEMENT INSTALLATION DETAIL	2.05

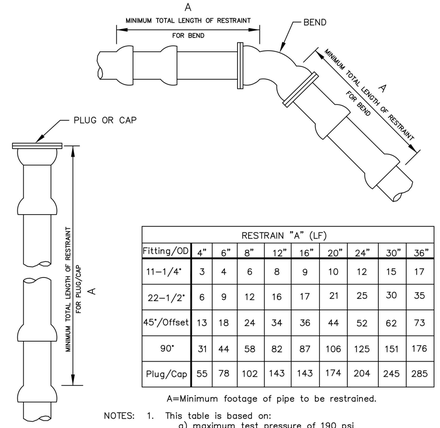

Fitting/OD	RESTRAIN "A" (LF) 4"	6"	8"	12"	16"	20"	24"	30"	36"
11–1/4°	3	4	6	8	9	10	12	15	17
22–1/2°	6	9	12	16	17	21	25	30	35
45°/Offset	13	18	24	34	36	44	52	62	73
90°	31	44	58	82	87	106	125	151	176
Plug/Cap	55	78	102	143	143	174	204	245	285

A=Minimum footage of pipe to be restrained.

NOTES: 1. This table is based on:
a) maximum test pressure of 190 psi
b) laying condition type 2 (see Details 2.01 and 2.02)
c) poor soil conditions
d) using D.I.P.
e) 3 feet of cover for 12" and smaller mains; 4 feet of cover for 16" and larger mains
f) Horizontal bends only – Engineer to submit calculations for vertical restraints
2. For polywrapped D.I.P., increase the footage to restrain by 25%.
3. For PVC pipe, increase the footage to restrain by 20%.
4. "Restrained" pipe shall be Manufactured Restrained Joint pipe, push–on joint pipe restrained w/gasket–type "Gripper Restraints", or mechanical joint pipe restrained by Megalug (or approved equivalent).
5. Any additional fittings within the restrained section shall be restrained accordingly.

TAMPA WATER DEPARTMENT	APPROVED Sept. 2011	REVISED	RESTRAINED JOINT STANDARD FOR BENDS, PLUGS, AND CAPS	2.11

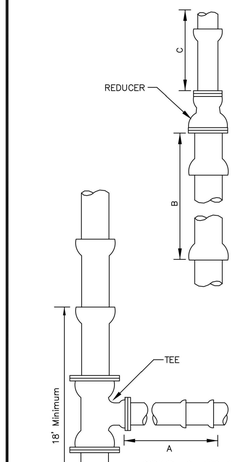

Fitting Size	Restrain (LF) Tee "A"	Reducer "B"	Unrestrained Straight Run (LF) Reducer "C"
4x4	25	*	*
6x4	11	40	59
6x6	48	*	*
8x4	A.T.	73	142
8x6	38	43	56
8x8	72	*	*
12x4	A.T.	124	364
12x6	19	104	208
12x8	57	76	115
12x12	114	*	*
16x6	A.T.	121	321
16x8	27	104	212
16x12	77	61	82
16x16	118	*	*
20x6	A.T.	156	527
20x8	14	144	369
20x12	68	109	186
20x16	111	61	77
20x20	149	*	*
24x6	A.T.	189	777
24x8	A.T.	179	560
24x12	59	150	313
24x16	104	111	172
24x20	144	61	74
24x24	179	*	*
30x6	A.T.	234	1227
30x8	A.T.	226	904
30x12	45	204	542
30x16	94	173	341
30x20	135	134	208
30x24	172	86	110
30x30	220	*	*
36x6	A.T.	276	1784
36x8	A.T.	269	1328
36x12	30	251	824
36x16	83	226	551
36x20	127	195	373
36x24	165	156	245
36x30	215	86	106
36x36	261	*	*

A.T.–Restraint required at Tee only.
*–not applicable

NOTES: 1. This table is based on:
a) maximum test pressure of 190 psi
b) laying condition type 2 (see Details 2.01 and 2.02)
c) poor soil conditions
d) using D.I.P.
e) 3 feet of cover for 12" and smaller mains; 4 feet of cover for 16" and larger mains
f) Horizontal bends only – Engineer to submit calculations for vertical restraints
2. Restraint For Reducers: If "C" straight run of pipe downstream of reducer not available, then restrain "B" upstream of reducer.
3. For polywrapped D.I.P., increase the footage to restrain by 25%.
4. For PVC pipe, increase the footage to restrain by 20%.
5. "Restrained" pipe shall be Manufactured Restrained Joint pipe, push–on joint pipe restrained w/gasket–type "Gripper Restraints", or mechanical joint pipe restrained by Megalug (or approved equivalent).
6. Any additional fittings within the restrained section shall be restrained accordingly.

TAMPA WATER DEPARTMENT	APPROVED Sept., 2011	REVISED	RESTRAINED JOINT STANDARD FOR TEES AND REDUCERS	2.12

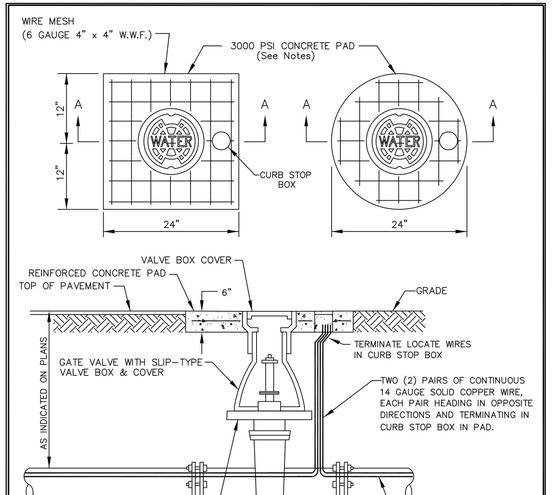

SECTION A–A N.T.S.

Notes :

1. Circular or square concrete pad required for all valve box installations.
2. Cast iron valve boxes shall be firmly supported and centered and plumb over the operating nut of the valve. Valve box cover shall be flush with the surface of finished pavement or grade or at such other level as may be directed by the Department.
3. "Blue" Water Valve locate markers required for all valve installations.

TAMPA WATER DEPARTMENT	APPROVED Sept. 2011	REVISED	VALVE INSTALLATION W/VALVE BOX & PAD FOR PLASTIC PIPE	3.02

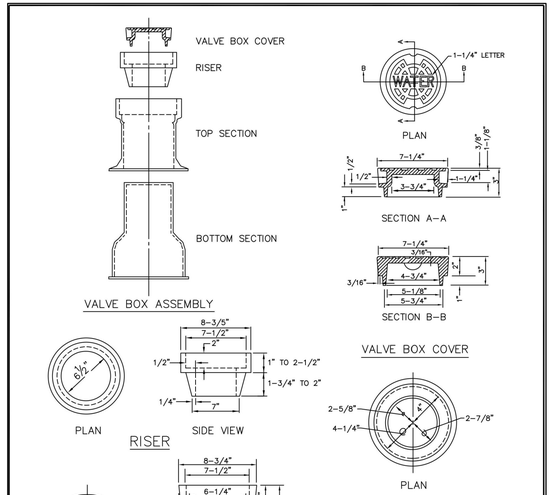

TOP SECTION	SIZE	A
	10"	10"
	16"	16"

BOTTOM SECTION	SIZE	A	B
	15"	15"	6–1/2"
	24"	24"	15–1/2"
	36"	36"	27–1/2"

TAMPA WATER DEPARTMENT	APPROVED Sept. 2011	REVISED	VALVE BOX, SLIP–TYPE	3.04

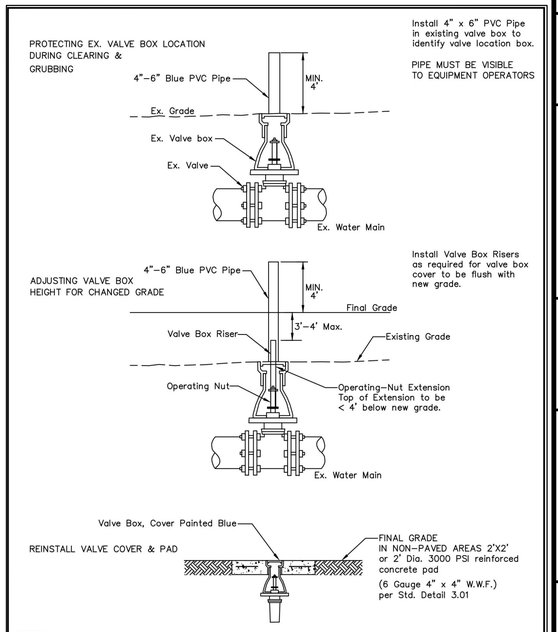

NOTES:
1. MATERIALS FOR & INSTALLATION OF VALVE BOXES & PADS SHALL CONFORM TO TAMPA WATER DEPT. STANDARDS & CONSTRUCTION DETAILS (DETAILS 3.01 & 3.03)

TAMPA WATER DEPARTMENT	APPROVED Dec. 2011	REVISED	VALVE BOX ADJUSTMENTS FOR GRADE CHANGE	3.05

CITY OF TAMPA
CONTRACT ADMINISTRATION DEPARTMENT
PLANNING AND DESIGN DIVISION
306 E. JACKSON STREET 4 NORTH
TAMPA, FLORIDA 33602
p. 813. 274. 8456 – f. 813. 274. 8080
url: www.tampagov.net

James E. Jackson, Jr. AIA, NOMA
City Architect
Edward D. Rice, AIA
Project Architect
Kevin L. Henika, AIA
Project Architect
Thomas A. Hester, Sr., AIA, NOMA
Project Architect
Kinsey C. Tillman
Drafting Technician
Jerry P. Sanders
Drafting Technician
Byron K. Thomas, LEED AP
Drafting Technician

MEP CONSULTANT
GRINER ENGINEERING, INC.
1628 1st. AVENUE NORTH
ST. PETERSBURG, FL 33713

STRUCTURAL CONSULTANT
BILLER REINHART
STRUCTURAL GROUP, INC.
4014 GUNN HWY. SUITE 248
TAMPA, FL 33713

CIVIL CONSULTANT
FBPR Certificate of Authorization No.: 26929
5M CIVIL LLC
12315 Wycliff Pl
Tampa, FL 33626
(813) 404-8872
www.5mcivil.com

LANDSCAPE CONSULTANT
DAVID CONNER & ASSOCIATES
1509 W. SWANN AVENUE
SUITE 255
TAMPA, FL 33606

FIRE STATION 23
20770 TROUT CREEK DR.
TAMPA, FL 33647

DPW FILE NUMBER

DPW NUMBER
17–C–00037

ISSUE DATE
???

DRAWN BY
JAM

REVISIONS

SEAL



Jesus A. Merly, PE FL Reg No. 58113

Elevations shown within this plan set are based on North American Vertical Datum (NAVD 1988)

WATER DETAILS

SHEET NUMBER:
CD-3

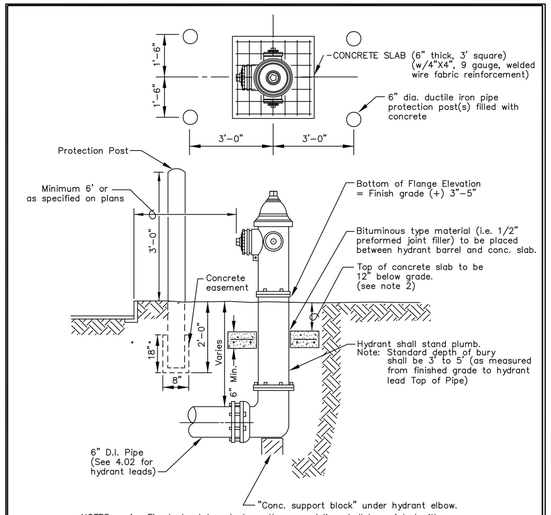

NOTES:

1. Fire hydrant barrel above the ground line shall be painted with a high-grade enamel paint, Federal Safety yellow (OSHA approved), and the hydrant bonnet shall be painted OSHA green.
2. Concrete slab may be eliminated in areas where hydrant is set in sidewalk and sidewalk has been installed prior to final acceptance of the hydrant.
3. Thrust restraint for hydrant:
   a) hydrant shall be firmly supported under elbow in all methods by support block
   b) all backfill shall be thoroughly compacted under support block and under thrust collar
   c) all hydrant leads shall be restrained by Megalugs or equivalent mechanical restraints
4. Protection posts are required when hydrant is less than 6 feet from edge of pavement, or as directed by the Engineer.
5. For PVC mains, install concrete support block under all hydrant tees.

TAMPA WATER DEPARTMENT	APPROVED	REVISED	FIRE HYDRANT INSTALLATION	4.01
	Sept. 2011			

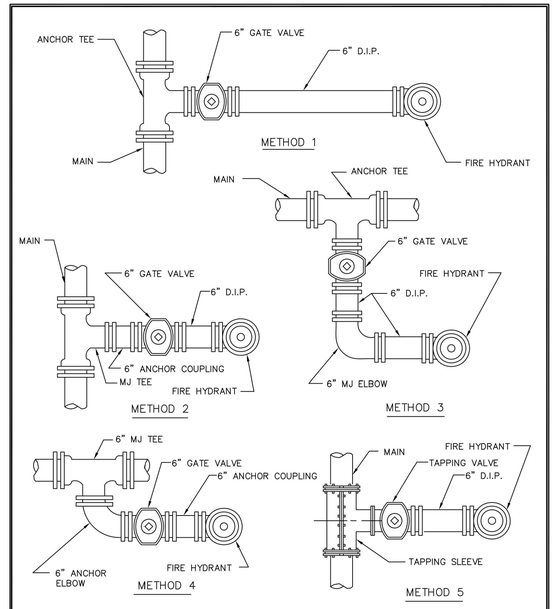

1. Valve shall be set in accordance with Detail 3.01. For hydrant set, see Detail 4.01.
2. All valves shall be anchored to branch of tee on all hydrant installations.
3. All hydrant leads shall be restrained by Megalugs or equivalent.
4. For PVC mains, install concrete support block under hydrant tees.

TAMPA WATER DEPARTMENT	APPROVED	REVISED	FIRE HYDRANT METHODS OF INSTALLATION	4.02
	Sept. 2011			

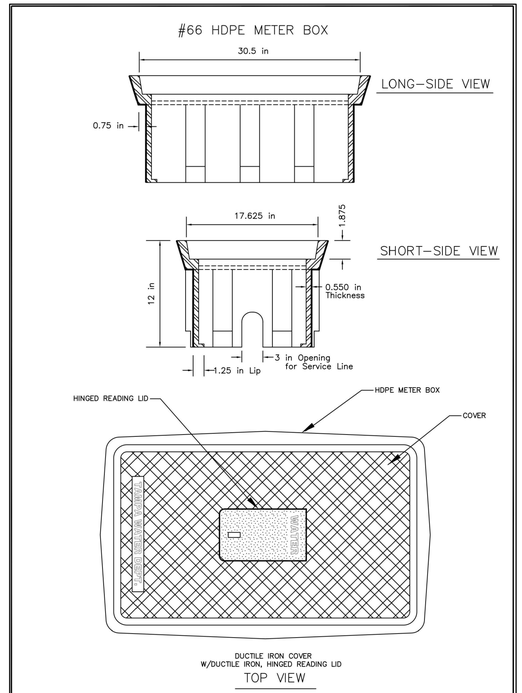

TAMPA WATER DEPARTMENT	APPROVED	REVISED	1-1/2" & 2" SINGLE SERVICE HDPE METER BOX	5.12
	Sept. 2011	RNM April '09 JRD Sept. 2011		

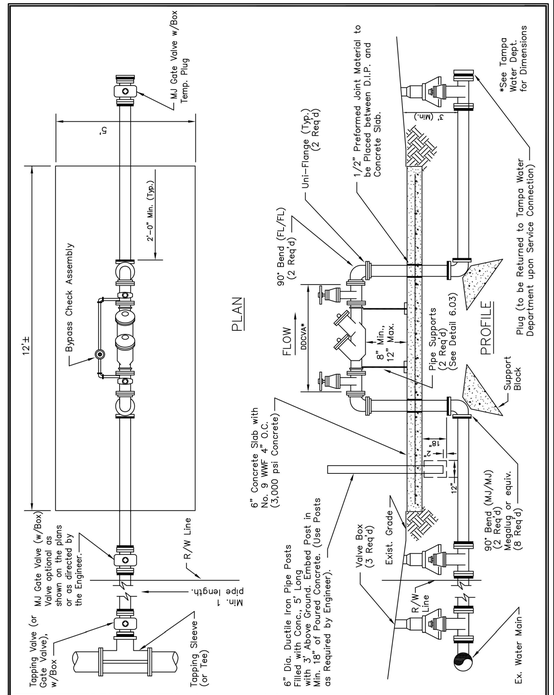

TAMPA WATER DEPARTMENT	APPROVED	REVISED	ABOVE GROUND DOUBLE DETECTOR CHECK VALVE ASSEMBLY	6.02
	Sept. 2011			

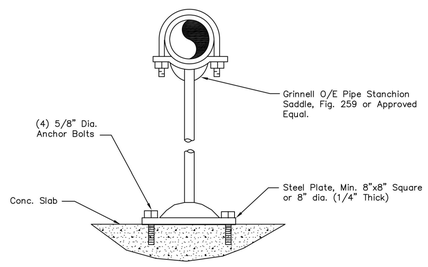

TAMPA WATER DEPARTMENT	APPROVED	REVISED	PIPE SUPPORTS FOR ABOVE GROUND DDCVA	6.03
	Sept. 2011			

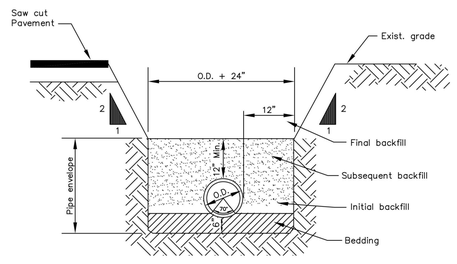

NOTES:

1. Pipe envelope bedding and backfill shall be compacted in 6" loose lifts.
2. Backfill above pipe envelope shall be compacted in 12" loose lifts maximum.
3. Backfill must be compacted to 98% of the maximum modified proctor density in paved and non-paved areas.

TAMPA WATER DEPARTMENT	APPROVED	REVISED	PIPE BEDDING AND TRENCH FOR PVC PIPE	7.01
	Sept. 2011			

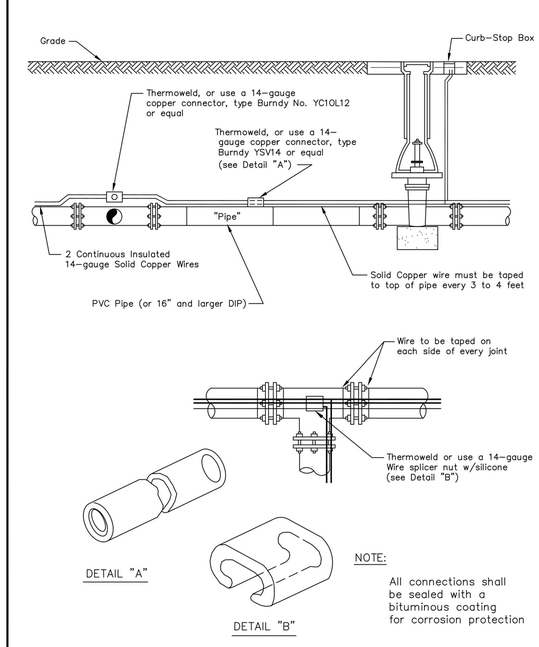

TAMPA WATER DEPARTMENT	APPROVED	REVISED	DOUBLE COPPER TRACER WIRE ON PIPE	7.02
	Sept. 2011	May '09 RNM Sept. 2011 JRD		

CITY OF TAMPA
CONTRACT ADMINISTRATION DEPARTMENT
PLANNING AND DESIGN DIVISION
306 E. JACKSON STREET 4 NORTH
TAMPA, FLORIDA 33602
p. 813. 274. 8456 - f. 813. 274. 8080
url: www.tampagov.net

James E. Jackson, Jr. AIA, NOMA
City Architect
Edward D. Rice, AIA
Project Architect
Kevin L. Henika, AIA
Project Architect
Thomas A. Hester, Sr., AIA, NOMA
Project Architect
Kinsey C. Tillman
Drafting Technician
Jerry P. Sanders
Drafting Technician
Byron K. Thomas, LEED AP
Drafting Technician

MEP CONSULTANT
GRINER ENGINEERING, INC.
1628 1st. AVENUE NORTH
ST. PETERSBURG, FL 33713

STRUCTURAL CONSULTANT
BILLER REINHART
STRUCTURAL GROUP, INC.
4014 GUNN HWY. SUITE 248
TAMPA, FL 33713

CIVIL CONSULTANT
FBPR Certificate of Authorization No.: 26929
5M CIVIL LLC
12315 Wycliff Pl
Tampa, FL 33626
(813) 404-8872
www.5mcivil.com

LANDSCAPE CONSULTANT
DAVID CONNER & ASSOCIATES
1509 W. SWANN AVENUE
SUITE 255
TAMPA, FL 33606

FIRE STATION 23
20770 TROUT CREEK DR.
TAMPA, FL 33647

DPW FILE NUMBER

DPW NUMBER
17-C-00037

ISSUE DATE
???

DRAWN BY
JAM

REVISIONS

SEAL

JESUS ANTONIO MERLY LICENSE No. 58113 STATE OF FLORIDA PROFESSIONAL ENGINEER

Jesus A. Merly, PE FL Reg No. 58113

Elevations shown within this plan set are based on North American Vertical Datum (NAVD 1988)

WATER DETAILS

SHEET NUMBER:
CD-4

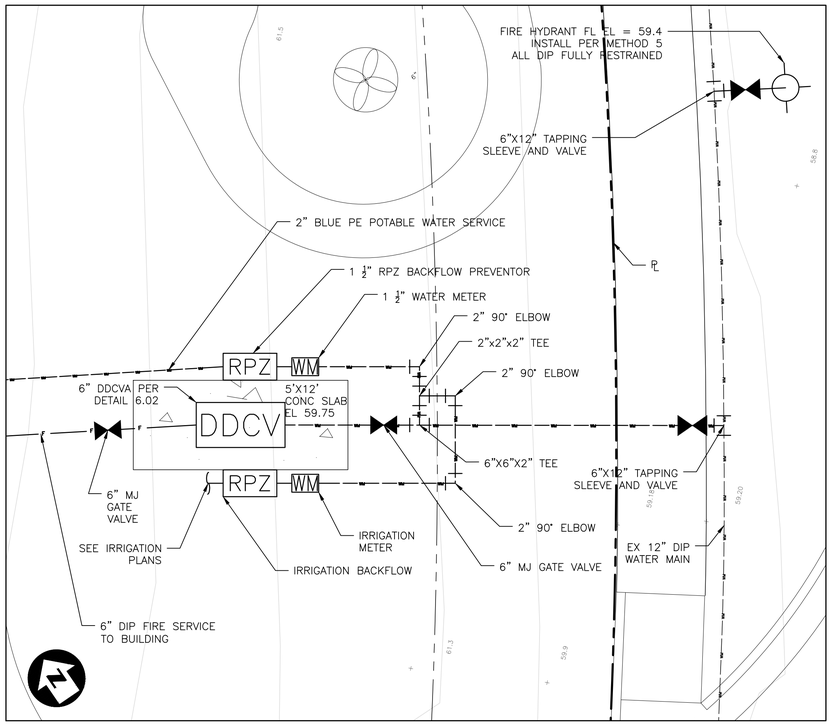

1 CD-5 WATER MAIN CONNECTION PLAN
1"=4'

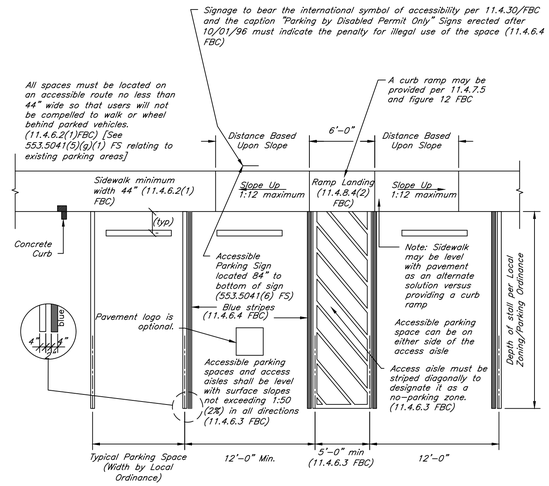

NOTES:

1. Citations to FBC are to the Florida Accessibility Code for Building Construction, Chapter 11 of the Florida Building Code, Citations to FS are to the Florida Statutes.

2 CD-5 ACCESSIBLE PARKING SPACE DETAIL
NTS

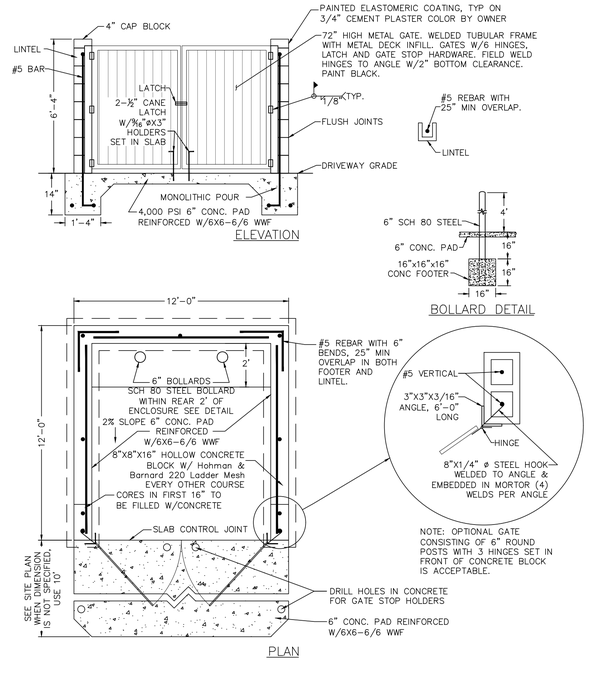

3 CD-5 SINGLE DUMPSTER ENCLOSURE
NOT TO SCALE

CITY OF TAMPA
CONTRACT ADMINISTRATION DEPARTMENT
PLANNING AND DESIGN DIVISION
306 E. JACKSON STREET 4 NORTH
TAMPA, FLORIDA 33602
p: 813. 274. 8456 – f: 813. 274. 8080
url: www.tampagov.net

James E. Jackson, Jr. AIA, NOMA
City Architect
Edward D. Rice, AIA
Project Architect
Kevin L. Henika, AIA
Project Architect
Thomas A. Hester, Sr., AIA, NOMA
Project Architect
Kinsey C. Tillman
Drafting Technician
Jerry P. Sanders
Drafting Technician
Byron K. Thomas, LEED AP
Drafting Technician

MEP CONSULTANT
GRINER ENGINEERING, INC.
1628 1st. AVENUE NORTH
ST. PETERSBURG, FL 33713

STRUCTURAL CONSULTANT
BILLER REINHART
STRUCTURAL GROUP, INC.
4014 GUNN HWY. SUITE 248
TAMPA, FL 33713

CIVIL CONSULTANT
FBPR Certificate of Authorization No.: 26929
5M CIVIL LLC
12315 Wycliff Pl
Tampa, FL 33626
(813) 404-8872
www.5mcivil.com

LANDSCAPE CONSULTANT
DAVID CONNER & ASSOCIATES
1509 W. SWANN AVENUE
SUITE 255
TAMPA, FL 33606

FIRE STATION 23
20770 TROUT CREEK DR.
TAMPA, FL 33647

DPW FILE NUMBER

DPW NUMBER
17-C-00037

ISSUE DATE
???

DRAWN BY
JAM

REVISIONS

SEAL

JESUS ANTONIO MERLY LICENSE No. 58113 STATE OF FLORIDA PROFESSIONAL ENGINEER

Jesus A. Merly, PE FL Reg No. 58113

Elevations shown within this plan set are based on North American Vertical Datum (NAVD 1988)

MISCELLANEOUS DETAILS

SHEET NUMBER:

CD-5

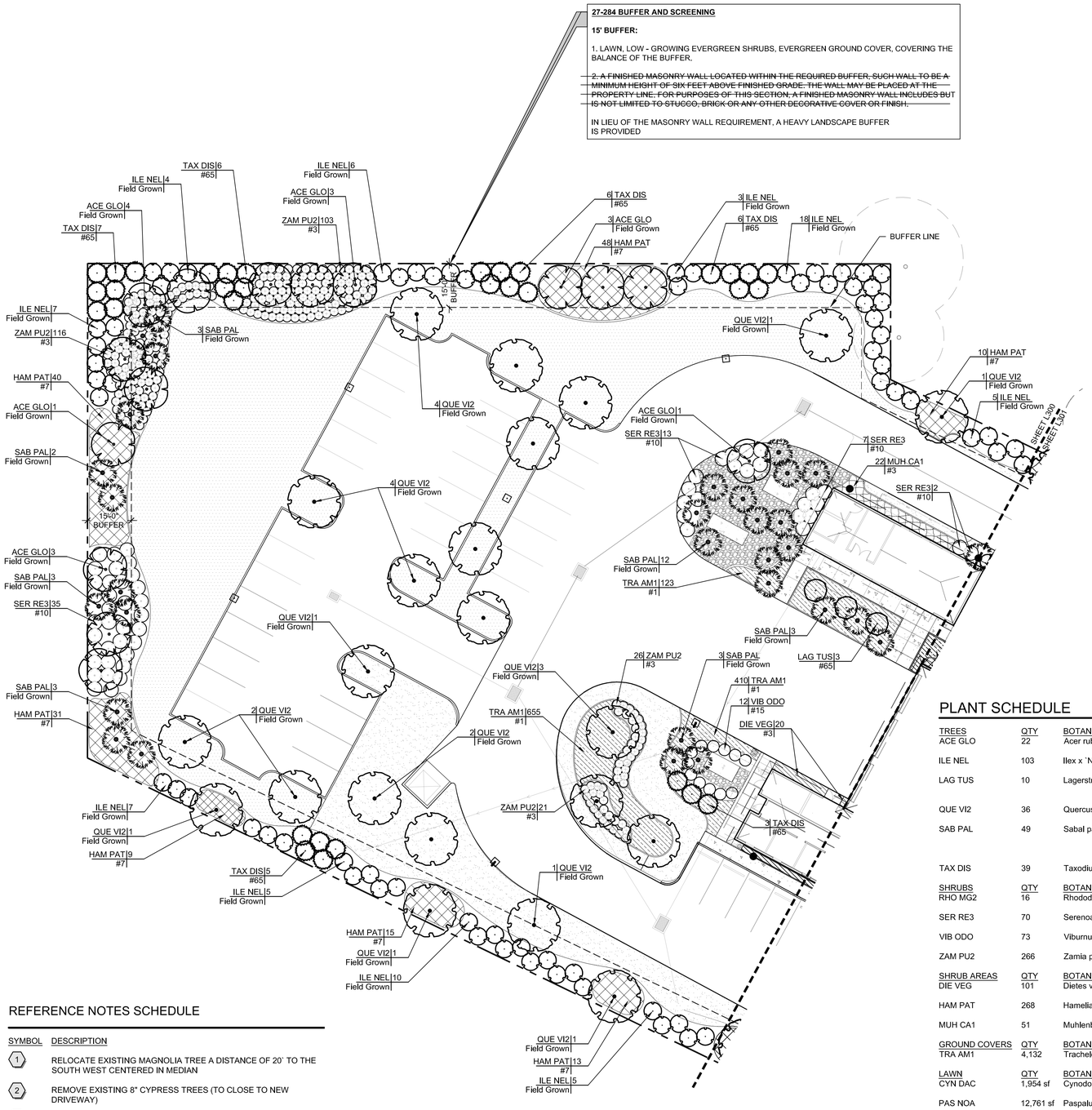

REFERENCE NOTES SCHEDULE

SYMBOL	DESCRIPTION
1	RELOCATE EXISTING MAGNOLIA TREE A DISTANCE OF 20` TO THE SOUTH WEST CENTERED IN MEDIAN
2	REMOVE EXISTING 8" CYPRESS TREES (TO CLOSE TO NEW DRIVEWAY)
3	PRESERVE AND PROTECT EXISTING CYPRESS AND MAGNOLIA TREES PER CITY OF TAMPA TREE PROTECTION STANDARD
4	18" HT. BERM ALONG TROUT CREEK ROAD TO BE PRESERVED. RESTORE EXISTING HYBRID BERMUDA LAWN

LEGEND

- EXISTING TREE TO REMAIN
- PROPERTY LINE
- LANDSCAPE STEEL EDGING FOR DECORATIVE GRAVEL AREAS
- WALL LIGHT FIXTURE (SEE ELECTRICAL DRAWINGS)
- LIGHT POLE FIXTURE (SEE ELECTRICAL DRAWINGS)
- DECORATIVE GRAVEL (1,613 SF.) WITH SPECIFIED FILTER FABRIC AND STEEL EDGING
- BERMUDA GRASS (1,954 SF.)
- ARGENTINE BAHIA GRASS (12,761 SF.)
- ST. AGUSTINE GRASS (11,544 SF.)

SITE CALCULATIONS

PROJECT SITE AREA:	2.5 AC - 109,102 SF
BUILDING AREA:	8,666 SF
SITE PARKING AND VUA:	44,607 SF

TREE TABLES FOR CREDIT AND DEBIT

Diameter (inches)	# Retained on Site	Multiplier for Credit	Credit
5"- 7"	1	0	0
8"- 12"	1	-1	1
13"- 19"	0	-2	0
20"- 29"	0	-4	0
30" or more	0	-10	0
All Palms	0	-1	0
Total	2		-1*

*negative indicates subtraction from total required trees

Diameter (inches)	# Removed on Site	Multiplier for Debit	Debit
5"- 7"	0	0	0
8"- 12"	2	1	2
13"- 19"	0	2	0
20"- 29"	0	4	0
30" or more	0	Inch per inch/2	0
All Palms	0	1	0
Total	2		2

SUMMARY OF REQUIREMENTS

REQUIRED	REQUIRED CHAPTER 13-161 AND 27-130	NEW TAMPA OVERLAY DISTRICT REQUIREMENT	PROVIDED
1 TREE (2" CALIPER MIN) PER 1,500 SF OF V.U.A. AREA 44,607 SF / 1,500 SF	30 TREES	ALL PROPOSED TREES SHALL BE 4" CALIPER * BUFFER SHRUBS SHALL BE 4' HT.	30 TREES *
1 TREE (2" CALIPER MIN) PER 40 LF OF V.U.A. FRONTAGE 241,305 LF/ 40 LF	6 TREES		6 TREES*
20% OF VUA SHALL BE GREEN SPACE 44,607 SF X .2	8,921 SF		10,161 SF
10' BUFFER: 1 EVERGREEN TREE (30 GAL.) PER 20 LF OF BUFFER 257.21 LF/ 20LF	13 TREES		13 TREES*
TOTAL TREES REQUIRED TO BE PLANTED			**49 TREES -1 (CREDITED) = 48 TREES***
TOTAL TREES PROVIDED			**211 TREES***

PLANT SCHEDULE

TREES	QTY	BOTANICAL NAME / COMMON NAME	CONT	CAL	SIZE	REMARKS
ACE GLO	22	Acer rubrum `October Glory` TM / October Glory Maple	Field Grown	4"Cal	14`-16`HT X 9`-10` SP	
ILE NEL	103	Ilex x `Nellie R Stevens` / Nellie Stevens Holly	Field Grown	4"Cal	12-14` Ht x 6` Sp	
LAG TUS	10	Lagerstroemia indica `Tuscarora` / Tuscarora Crape Myrtle	#65	MT. (4-6 TRUNKS MIN.)	12 - 14` HT	Multi-Trunk Specimen, minimum of 4 trunks at 1.25" caliper
QUE VI2	36	Quercus virginiana / Southern Live Oak	Field Grown	4"Cal	14`-16` HT X 8`-10` SP	
SAB PAL	49	Sabal palmetto / Cabbage Palm	Field Grown		10`-16` Ht Ct.	Straight Trunk, No boots, Regenerated root. Stagger ht unless otherwise noted. (Locate min. 18" from building roof eve)
TAX DIS	39	Taxodium distichum / Bald Cypress	#65	4"Cal	13` HT; 5`-6` SP.	
SHRUBS	QTY	BOTANICAL NAME / COMMON NAME	CONT	SIZE		REMARKS
RHO MG2	16	Rhododendron `Mrs. G.G. Gerbing` / GG Gerbing Azalea	#3	18" Ht x 18" Sp		
SER RE3	70	Serenoa repens / Saw Palmetto	#10	18" Ht x 18" Sp		
VIB ODO	73	Viburnum odoratissimum / Sweet Viburnum	#15	48" HT. X 36" SP.		
ZAM PU2	266	Zamia pumila / Coontie	#3	15" Ht x 15" Sp		
SHRUB AREAS	QTY	BOTANICAL NAME / COMMON NAME	CONT	SIZE	SPACING	REMARKS
DIE VEG	101	Dietes vegeta / African Iris	#3	15" HT. X 10" SP.	24" o.c.	
HAM PAT	268	Hamelia patens / Fire Bush	#7	48" HT. X 36" SP.	48" o.c.	
MUH CA1	51	Muhlenbergia capillaris / Pink Muhly	#3	18" Ht x 18" Sp	36" o.c.	
GROUND COVERS	QTY	BOTANICAL NAME / COMMON NAME	CONT	SIZE	SPACING	REMARKS
TRA AM1	4,132	Trachelospermum asiaticum `Minima` / Minima Jasmine	#1	12" Sp	12" o.c.	
LAWN	QTY	BOTANICAL NAME / COMMON NAME	CONT	SIZE	SPACING	REMARKS
CYN DAC	1,954 sf	Cynodon dactylon / Bermuda Grass	sod			
PAS NOA	12,761 sf	Paspalum notatum `Argentine` / Argentine Bahiagrass	sod			
STE SEC	11,544 sf	Stenotaphrum secundatum / St. Augustine Grass	sod			

N

0 10 20 40 60

Always call 811 two full business days before you dig

Sunshine811.com

CITY OF TAMPA
CONTRACT ADMINISTRATION DEPARTMENT
PLANNING AND DESIGN DIVISION
306 E. JACKSON STREET 4 NORTH
TAMPA, FLORIDA 33602
ph. 813. 274. 8456
url www.tampagov.net

James E. Jackson, Jr. AIA, NOMA
City Architect
Edward D. Rice, AIA
Project Architect
Kevin L. Henika, AIA
Project Architect
Thomas A. Hester, Sr., AIA, NOMA
Project Architect
David R. Pagitt
Supervisor, Architectural Drafting
Kinsey C. Tillman
Drafting Technician
Jerry P. Sanders
Drafting Technician
Byron K. Thomas
Drafting Technician

MEP CONSULTANT

STRUCTURAL CONSULTANT

CIVIL CONSULTANT
5M CIVIL LLC
12315 WYCLIFF PI
TAMPA, FL 33626

DAVID CONNER ASSOCIATES
100 East Madison Street Suite #200 Tampa, FL 33602
813.258.1997 | dconnerassociates.com | LC0000319
Planning+LandscapeArchitecture+Design

CITY OF TAMPA
FIRE STATION #23
LANDSCAPE PLANS

DPW FILE NUMBER

DPW NUMBER
17-010

ISSUE DATE
2017-07-28

DRAWN BY
IG

REVISIONS

90% CONSTRUCTION DOCUMENTS

SEAL

SHEET NUMBER
L- 300
PLANTING PLANS

1 OF 8

LEGEND

- EXISTING TREE TO REMAIN
- PROPERTY LINE
- LANDSCAPE STEEL EDGING FOR DECORATIVE GRAVEL AREAS
- WALL LIGHT FIXTURE (SEE ELECTRICAL DRAWINGS)
- LIGHT POLE FIXTURE (SEE ELECTRICAL DRAWINGS)
- DECORATIVE GRAVEL (1,613 SF.) WITH SPECIFIED FILTER FABRIC AND STEEL EDGING
- BERMUDA GRASS (1,954 SF.)
- ARGENTINE BAHIA GRASS (12,761 SF.)
- ST. AGUSTINE GRASS (11,544 SF.)

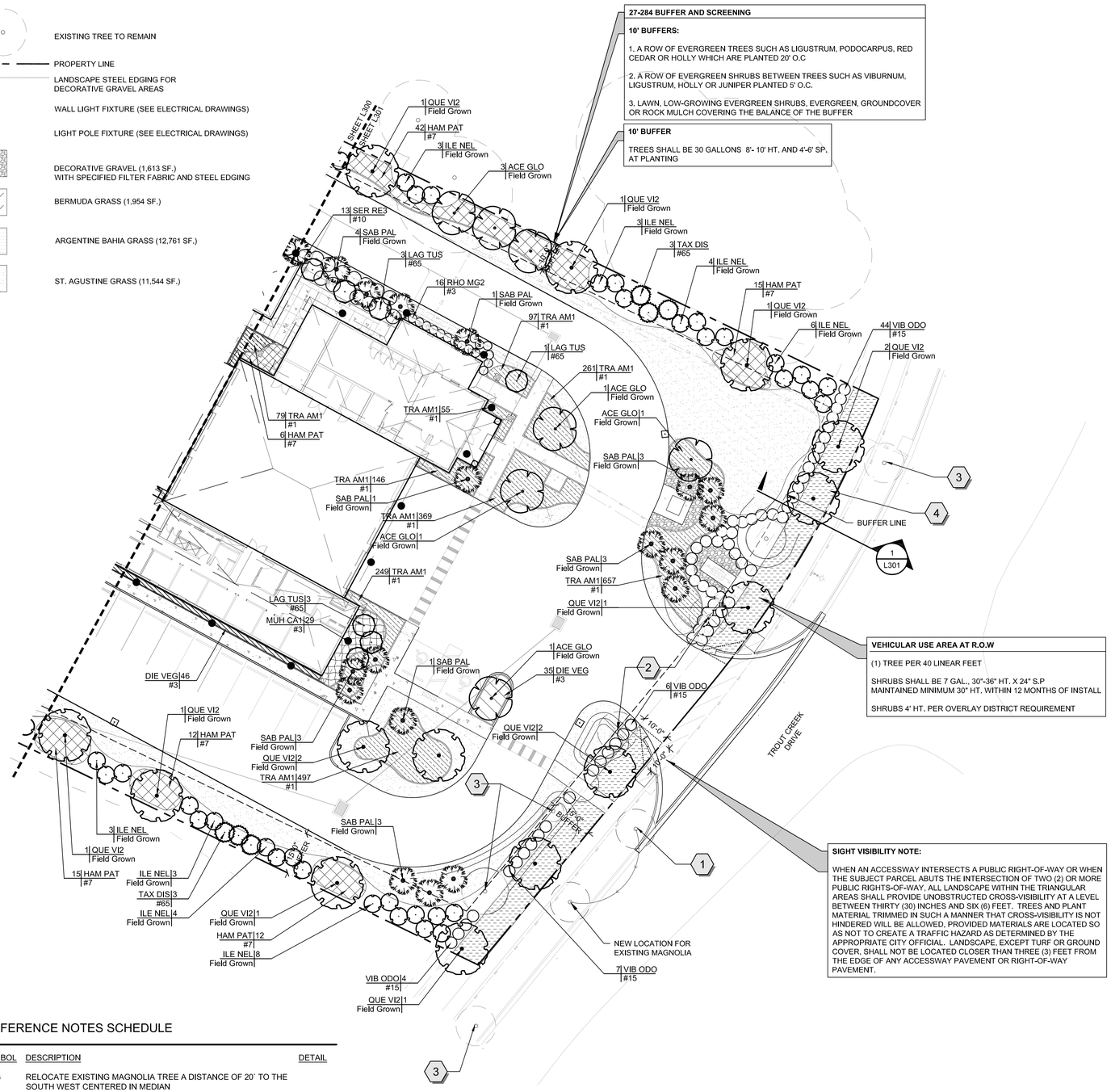

REFERENCE NOTES SCHEDULE

SYMBOL	DESCRIPTION	DETAIL
1	RELOCATE EXISTING MAGNOLIA TREE A DISTANCE OF 20` TO THE SOUTH WEST CENTERED IN MEDIAN	
2	REMOVE EXISTING 8" CYPRESS TREES (TO CLOSE TO NEW DRIVEWAY)	
3	PRESERVE AND PROTECT EXISTING CYPRESS AND MAGNOLIA TREES PER CITY OF TAMPA TREE PROTECTION STANDARD	
4	18" HT. BERM ALONG TROUT CREEK ROAD TO BE PRESERVED. RESTORE EXISTING HYBRID BERMUDA LAWN	

GENERAL LANDSCAPE NOTES:

1. THE CONTRACTOR IS RESPONSIBLE FOR MAINTAINING, IN "FULL", ALL LANDSCAPE PLANTING AREAS AFTER RECEIPT OF WRITTEN ACCEPTANCE BY THE OWNER. "IN FULL" MEANS WATERING, WEEDING, PEST CONTROL, MULCHING, MOWING AND FERTILIZING. MAINTENANCE PERIOD SHALL BE 90 DAYS..
2. THE CONTRACTOR SHALL PROVIDE A ONE YEAR WRITTEN GUARANTEE FOR ALL INSTALLED PLANT MATERIAL..
3. THE CONTRACTOR SHALL STAKE THE LOCATIONS OF ALL PLANT MATERIAL AND PLANTING BED LINES FOR REVIEW BY THE OWNERS REPRESENTATIVE PRIOR TO START OF ANY PLANTING.
4. THE CONTRACTOR SHALL BE RESPONSIBLE FOR VERIFICATION OF ALL WRITTEN PLANT QUANTITIES PRIOR TO INITIATION OF THE WORK. IN THE EVENT THAT THE PLANS CONTRADICT THE PLANT LIST, THE PLANS RULE.
5. THE CONTRACTOR SHALL BE FAMILIAR WITH AND ACCEPT THE EXISTING SITE CONDITIONS PRIOR TO INITIATION OF THE WORK. ANY VARIATION FROM THE EXISTING CONDITIONS SHALL BE THE RESPONSIBILITY OF THE CONTRACTOR.
6. THE CONTRACTOR SHALL BE RESPONSIBLE FOR LOCATING ALL UNDERGROUND UTILITIES. DRAINAGE STRUCTURES, CURBS, SIDEWALKS AND ANY OTHER OBJECTS WHICH MIGHT BE DAMAGED DURING THE WORK.
7. THE CONTRACTOR SHALL BE RESPONSIBLE TO MAKE ANY AND ALL NECESSARY REPAIRS TO DAMAGE CAUSED BY HIS WORK AT NO ADDITIONAL COST TO THE OWNER OR LANDSCAPE ARCHITECT.
8. THE CONTRACTOR SHALL COORDINATE HIS WORK WITH THAT OF OTHER SUBCONTRACTORS ON THE PROJECT. THE CONTRACTOR SHALL NOT PROCEED WITH PLANT INSTALLATION PRIOR TO THE INSTALLATION AND OPERATION OF THE LANDSCAPE IRRIGATION SYSTEM. THE CONTRACTOR IS RESPONSIBLE FOR DAMAGE TO PLANT MATERIAL CAUSED BY INSUFFICIENT WATER.
9. THE CONTRACTOR IS RESPONSIBLE FOR ALL PREPARATION OF PLANTING BEDS FROM FINISH GRADE. PREPARATION SHALL INCLUDE APPLICATION OF PRE-EMERGENT HERBICIDES, LOOSENING SOIL TO A DEPTH OF 8", AND INCORPORATION OF PROPER SOIL AMENDMENTS INCLUDING PLANTING MIX, FERTILIZERS, AND pH ADJUSTERS AS RECOMMENDED BY SOILS TEST.
10. THE CONTRACTOR SHALL TEST THE EXISTING SOILS FOR SOIL COMPOSITION. ORGANIC CONTENT AND SOIL pH. SOIL TEST SHALL SERVE AS THE BASIS FOR CONTRACTOR RECOMMENDED SOIL AMENDMENTS. PROVIDE PROPOSAL FOR SOIL AMENDMENTS AS RECOMMENDED IN SOIL TEST. PROVIDE LANDSCAPE ARCHITECT A COPY OF SOIL TEST WITH LOCATION, DATE, AND LABORATORY CLEARLY LABELED.

LANDSCAPE BUFFERING AND SCREENING NOTES:

1. A LANDSCAPE BUFFER WITH AN AVERAGE WIDTH OF 15 FEET, AND A MINIMUM WIDTH OF TEN FEET,SHALL BE PROVIDED ALONG THE BOUNDARY OF ALL VEHICULAR USE AREAS (VUA S) ABUTTING PUBLIC RIGHT-OF-WAY. SAID BUFFER SHALL CONTAIN A MINIMUM 18-INCH HIGH EARTHEN BERM AND SHALL BE LANDSCAPED. BERM AND LANDSCAPE COMBINATION SHALL BE 80 PERCENT OPAQUE, AND BE A MINIMUM OF FOUR FEET IN HEIGHT AT TIME OF PLANTING, AND ALL TIMES THEREAFTER. HEIGHT SHALL BE MEASURED AT FINISHED GRADE OF THE VEHICULAR USE AREA. A BERM SHALL NOT BE REQUIRED WITHIN THE VISIBILITY TRIANGLE AREAS FOR ANY DRIVEWAYS OR PEDESTRIAN WALKWAYS.
2. ALL PORTIONS OF EACH SITE, WHICH ARE NOT DEVOTED TO BUILDINGS, SIDEWALKS, PAVING OR SPECIAL LANDSCAPE FEATURES, SHALL BE GRASSED; BUT THE USE OF NATIVE PLANT SPECIES AND XERISCAPING SHALL BE ENCOURAGED. HOWEVER, NO MORE THAN 30 PERCENT OF THE REQUIRED LANDSCAPED IN SHRUB AND GROUND COVERS. ALL YARD GRASS PLANTED SHALL BE HYBRID BERMUDA, OR ST. AUGUSTINE. HOWEVER, BAHIA GRASS MAY BE USED OR PLANTED IN RETENTION/DETENTION AREAS, DRAINAGE AREAS, AND WETLAND SETBACK AND MITIGATION AREAS
3. ALL SHADE TREES USED TO SATISFY LANDSCAPING REQUIREMENTS SHALL BE MINIMUM FOUR-INCH CALIPER. SECTION 6.06.03,A.5 SHALL APPLY WHEN OVERHEAD POWER LINES EXIST WITHIN THE REQUIRED VEGETATIVE PLANTING AREAS

LANDSCAPE AND TREE PLANTING STANDARD NOTES:

1. A RECOMMENDED TREES SHALL BE USED TO MEET THE REQUIREMENTS OF THIS CHAPTER AND SHALL, AS SPECIFIED IN THE TECHNICAL STANDARDS, BE AT LEAST TWO INCHES IN DIAMETER WHEN MEASURED AT SIX INCHES ABOVE GRADE AND SHALL BE SELECTED FROM THE RECOMMENDED TREES PLANTED ON A PARCEL SHAL BE SHADE TREES. AT LEAST FIFTY PERCENT OF THE RECOMMENDED TREES PLANTED ON A PARCEL SHALL BE SHADE TREES. AT LEAST SIXTY PERCENT OF THE RECOMMENDED TREES PLANTED ON A PARCEL SHALL BE NATIVE TREES. PALM TREES SHALL BE REPLACED ONE FOR ONE WITH A RECOMMENDED TREE

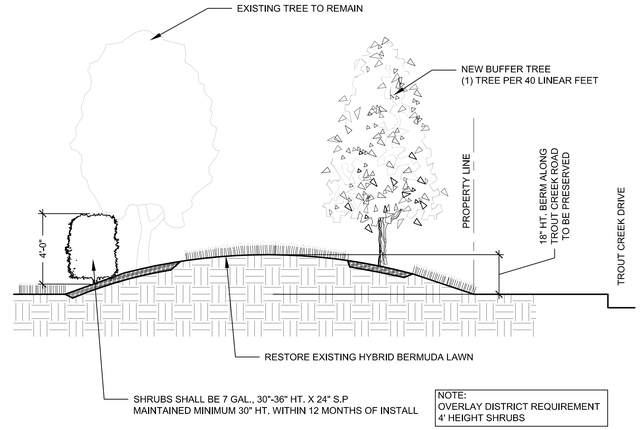

1 EXISTING BERM AT TROUT CREEK DRIVE

3/8" =1'-0"

N 0 10 20 40 60

Always call 811 two full business days before you dig

Sunshine811.com

CITY OF TAMPA
CONTRACT ADMINISTRATION DEPARTMENT
PLANNING AND DESIGN DIVISION
306 E. JACKSON STREET 4 NORTH
TAMPA, FLORIDA 33602
pr. 813. 274. 8456
url www.tampagov.net

James E. Jackson, Jr. AIA, NOMA
City Architect
Edward D. Rice, AIA
Project Architect
Kevin L. Henika, AIA
Project Architect
Thomas A. Hester, Sr., AIA, NOMA
Project Architect
David R. Pagitt
Supervisor, Architectural Drafting
Kinsey C. Tillman
Drafting Technician
Jerry P. Sanders
Drafting Technician
Byron K. Thomas
Drafting Technician

MEP CONSULTANT

STRUCTURAL CONSULTANT

CIVIL CONSULTANT
SM CIVIL LLC
12315 WYCLIFF PI
TAMPA, FL 33626

DAVID CONNER ASSOCIATES
100 East Madison Street Suite #200 Tampa, FL 33602
813.258.1997 | dconnerassociates.com | LC0000319
Planning+LandscapeArchitecture+Design

CITY OF TAMPA
FIRE STATION #23
LANDSCAPE PLANS

DPW FILE NUMBER

DPW NUMBER
17-010

ISSUE DATE
2017-07-28

DRAWN BY
IG

REVISIONS

90% CONSTRUCTION DOCUMENTS

SEAL

SHEET NUMBER
L- 301
PLANTING PLANS

2 OF 8

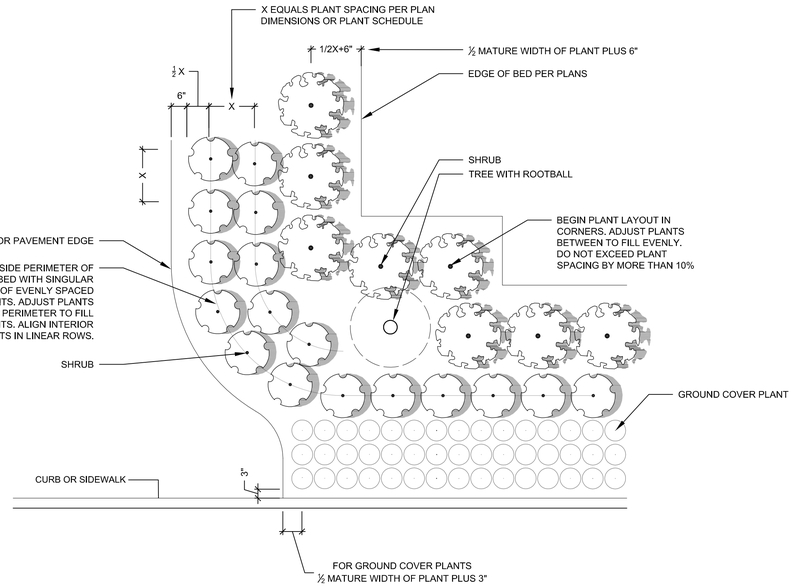

1 SHRUB AND GROUNDCOVER LAYOUT AT FOUNDATION

1/2" =1'-0"

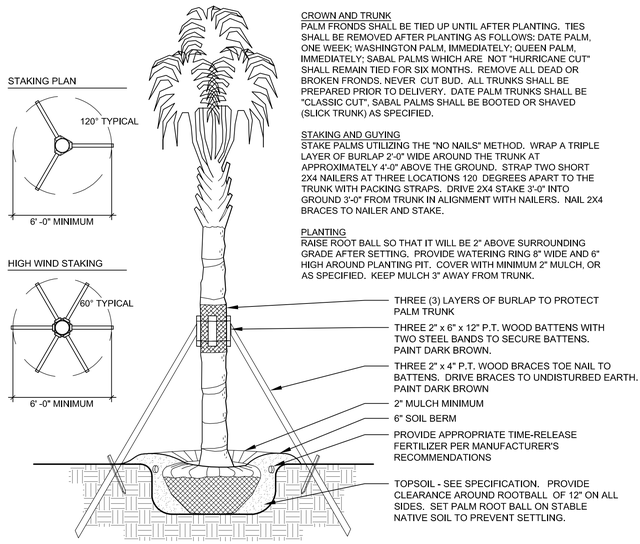

CROWN AND TRUNK
PALM FRONDS SHALL BE TIED UP UNTIL AFTER PLANTING. TIES SHALL BE REMOVED AFTER PLANTING AS FOLLOWS: DATE PALM, ONE WEEK; WASHINGTON PALM, IMMEDIATELY; QUEEN PALM, IMMEDIATELY; SABAL PALMS WHICH ARE NOT "HURRICANE CUT" SHALL REMAIN TIED FOR SIX MONTHS. REMOVE ALL DEAD OR BROKEN FRONDS. NEVER CUT BUD. ALL TRUNKS SHALL BE PREPARED PRIOR TO DELIVERY. DATE PALM TRUNKS SHALL BE "CLASSIC CUT", SABAL PALMS SHALL BE BOOTED OR SHAVED (SLICK TRUNK) AS SPECIFIED.

STAKING AND GUYING
STAKE PALMS UTILIZING THE "NO NAILS" METHOD. WRAP A TRIPLE LAYER OF BURLAP 2'-0" WIDE AROUND THE TRUNK AT APPROXIMATELY 4'-0" ABOVE THE GROUND. STRAP TWO SHORT 2X4 NAILERS AT THREE LOCATIONS 120 DEGREES APART TO THE TRUNK WITH PACKING STRAPS. DRIVE 2X4 STAKE 3'-0" INTO GROUND 3'-0" FROM TRUNK IN ALIGNMENT WITH NAILERS. NAIL 2X4 BRACES TO NAILER AND STAKE.

PLANTING
RAISE ROOT BALL SO THAT IT WILL BE 2" ABOVE SURROUNDING GRADE AFTER SETTING. PROVIDE WATERING RING 8" WIDE AND 6" HIGH AROUND PLANTING PIT. COVER WITH MINIMUM 2" MULCH, OR AS SPECIFIED. KEEP MULCH 3" AWAY FROM TRUNK.

2 PALM PLANTING

1/4" =1'-0"

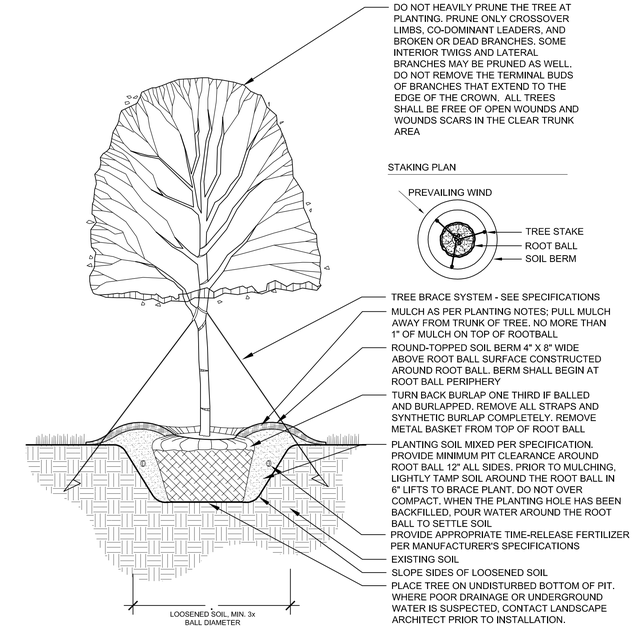

3 TREE PLANTING

1/2" =1'-0"

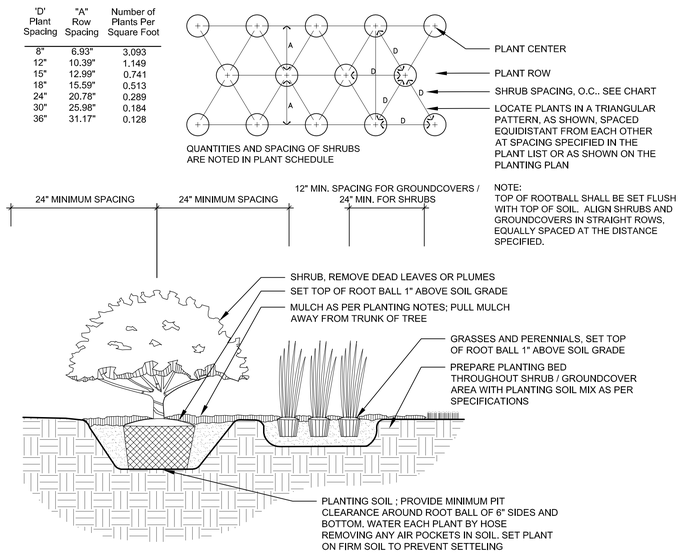

4 SHRUB AND GROUNDCOVER SPACING

1/4" =1'-0"

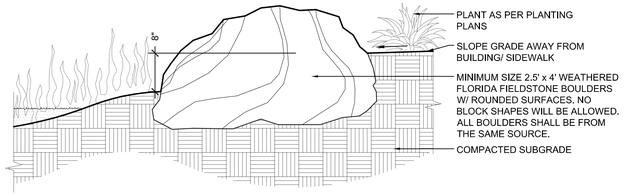

6 BOULDER

3/4" =1'-0"

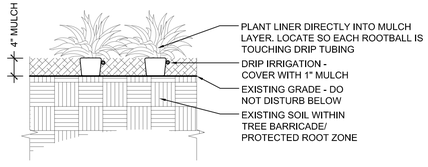

6 PROTECTED ROOT ZONE PLANTING (BARRICADE AREAS)

3/4" =1'-0"

LANDSCAPE PLANTING NOTES

1. ALL PLANTS SHALL BE HEALTHY, VIGOROUS MATERIAL FREE OF PESTS AND DISEASE.
2. ALL PLANT AND TREE MATERIAL SHALL BE FLORIDA NO. 1 GRADE OR BETTER, AS GRADED BY STATE DEPARTMENT OF AGRICULTURE NURSERY AS OUTLINED BY THE DIVISION OF PLANT INDUSTRY GRADES AND STANDARDS FOR NURSERY PLANTS, THIRD EDITION, 1973, AS REVISED FROM TIME TO TIME, AS GRADES AND STANDARDS FOR NURSERY PLANTS, PART II, PALMS AND TREES, THIRD PRINTING, 1975, AS REVISED FROM TIME TO TIME.
3. IN 'FLORIDA GRADES AND STANDARDS FOR NURSERY PLANTS', LATEST EDITION.
4. ALL TREES SHALL BE USED TO MEET THE REQUIREMENTS OF CHAPTER 13 AND CHAPTER 27 CODES OF THE CITY OF TAMPA AND SHALL ALSO MEET THE REQUIREMENTS OF ANY SPECIAL OVERLAY DISTRICT OF THE CITY OF TAMPA.
5. TREES SHALL BE AT LEAST TWO (2) INCHES IN DIAMETER WHEN MEASURED AT SIX (6) INCHES ABOVE GRADE OR UNLESS SPECIFICALLY NOTED
6. OTHERWISE. TREES SHALL BE SELECTED FROM THE CITY OF TAMPA RECOMMENDED TREE LIST.
7. AT LEAST FIFTY (50) PERCENT OF THE RECOMMENDED TREES PLANTED ON A PARCEL SHALL BE SHADE TREES. AT LEAST SIXTY (60) PERCENT OF THE RECOMMENDED TREES PLANTED ON A PARCEL SHALL BE NATIVE TREES. PALM TREES SHALL BE REPLACED ONE (1) FOR ONE (1) WITH A RECOMMENDED TREE.
8. ALL SINGLE-TRUNKED TREES SHALL BE STRAIGHT TRUNKED WITH ONE CENTRAL LEADER AND FULLY CROWNED.
9. MULTI-TRUNKED TREES SHALL HAVE A MINIMUM OF 4-5 STEMS (TRUNKS).
10. STAKE AND GUY TREES AS SHOWN IN PLANTING DETAILS. INSTALL RIBBON TIES TO ALL GUY WIRES AND MAINTAIN THROUGHOUT CONSTRUCTION AND DURING MAINTENANCE AND OR WARRANTY PERIOD. CONTRACTOR IS RESPONSIBLE FOR INSURING THAT TREES ARE STABLE AND DO NOT REPRESENT A HAZARD TO THE PUBLIC. GUYS SHALL BE REMOVED AFTER ONE GROWING SEASON.
11. MULCH ALL PLANTING BEDS WITH A MINIMUM OF 3" MINI PINE BARK NUGGETS.
12. ALL PLANTING AREAS SHALL HAVE A MINIMUM OF 12" OF NON-COMPACTED NATIVE SOIL INCORPORATED INTO TOPSOIL. REMOVE SOIL DAMAGED WITH BUILDING CONSTRUCTION DEBRIS WITHIN 12" OF THE FINISH GRADE IN PLANTING AREAS PRIOR TO FINAL GRADING. LAWN AREAS SHALL HAVE A MINIMUM OF 3" APPROVED TOPSOIL ROTO-TILLED INTO TOP 8" OF CLEAN FILL.
13. ALL TREES SHALL BE FREE OF OPEN WOUNDS AND WOUND SCARS IN THE CLEAR TRUNK AREA
14. SYNTHETIC BURLAP MUST BE TOTALLY REMOVED PRIOR TO INSTALLATION OF PLANT MATERIAL. IF NATURAL BURLAP IS USED, IT MAY BE TURNED DOWN 1/3 OF THE ROOTBALL.
15. ALL SHADE TREES SHALL HAVE A MINIMUM OF 7' CLEAR TRUNK OVER SIDEWALKS (UNLESS NOTED OTHERWISE)
16. CONTRACTOR SHALL NOT DEVIATE FROM PLANT SCHEDULE SPECIFICATIONS FOR PLANT MATERIAL.
17. A PERVIOUS AREA WITHAN EFFECTIVE MINIMUM RADIUS OF SIX (6) FEET FROM THE TRUNK OF A RECOMMENDED TREE SHALL BE MAINTAINED AROUND ALL NEW TREES.
18. ALL TREES AND PLANT MATERIAL SHALL BE PLANTED IN ACCORDANCE WITH THE SPECIFICATIONS DESCRIBED IN THE STATE DEPARTMENT OF AGRICUTURE AND CONSUMER SERVICES, DIVISION OF FORESTRY, TREE PROTECTION MANUAL FOR BUILDERS AND DEVELOPERS, OCTOBER 1980, AS REVISED FROM TIME TO TIME.
19. AREAS ON THE PARCEL WHICH ARE USED FOR STORMWATER RETENTION OR DETENTION PONDS WITH DEPRESSIONS OF LESS THAN TWO (2) FEET AND THE LANDSCAPED BANKS OF SUCH PONDS FROM THE MEAN HIGH WATERLINE TO THE TOP OF THE BANK SHALL BE CREDITED ON A ONE-TO-ONE BASIS TOWARD MEETING THE LANDSCAPE AREA.
20. IF A HEDGE OR OTHER SCREEN IS USED, IT MUST BE AT LEAST TWO (2) FEET IN HEIGHT AT TIME OF PLANTING.
21. TURF AND GRASS SOD SHALL BE CLEAN AND FREE OF WEEDS, NOXIOUS PESTS AND DISEASE. GRASS SEED SHALL BE DELIVERED TO THE JOB SITE IN BAGS WITH STATE DEPARTMENT OF AGRICULTURE TAGS ATTACHED
22. ALL LANDSCAPED AREAS SHALL ALLOW FOR ACCESS TO PUBLIC AND PRIVATE UTILITY FACILITIES FOR MAINTENANCE PURPOSES.

Always call 811 two full business days before you dig
Sunshine811.com

CITY OF TAMPA
CONTRACT ADMINISTRATION DEPARTMENT
PLANNING AND DESIGN DIVISION
306 E. JACKSON STREET 4 NORTH
TAMPA, FLORIDA 33602
p: 813. 274. 8456
url: www.tampagov.net

James E. Jackson, Jr. AIA, NOMA
City Architect
Edward D. Rice, AIA
Project Architect
Kevin L. Henika, AIA
Project Architect
Thomas A. Hester, Sr., AIA, NOMA
Project Architect
David R. Pagitt
Supervisor, Architectural Drafting
Kinsey C. Tillman
Drafting Technician
Jerry P. Sanders
Drafting Technician
Byron K. Thomas
Drafting Technician

MEP CONSULTANT

STRUCTURAL CONSULTANT

CIVIL CONSULTANT
5M CIVIL LLC
12315 WYCLIFF PI
TAMPA, FL 33626

DAVID CONNER ASSOCIATES
100 East Madison Street Suite #200 Tampa, FL 33602
813.258.1997 | dconnerassociates.com | LC0000319
Planning+LandscapeArchitecture+Design

CITY OF TAMPA
FIRE STATION #23
LANDSCAPE PLANS

DPW FILE NUMBER

DPW NUMBER
17-010

ISSUE DATE
2017-07-28

DRAWN BY
IG

REVISIONS
90% CONSTRUCTION DOCUMMENTS

SEAL

SHEET NUMBER
L- 340
PLANTING DETAILS



0 5 10 20 30

Always call 811 two full business days before you dig
Sunshine811.com

CITY OF TAMPA
CONTRACT ADMINISTRATION
DEPARTMENT
PLANNING AND DESIGN DIVISION

306 E. JACKSON STREET 4 NORTH
TAMPA, FLORIDA 33602
p: 813. 274. 8456
url: www.tampagov.net

James E. Jackson, Jr. AIA, NOMA
City Architect
Edward D. Rice, AIA
Project Architect
Kevin L. Henika, AIA
Project Architect
Thomas A. Hester, Sr., AIA, NOMA
Project Architect
David R. Pagitt
Supervisor, Architectural Drafting
Kinsey C. Tillman
Drafting Technician
Jerry P. Sanders
Drafting Technician
Byron K. Thomas
Drafting Technician

MEP CONSULTANT

STRUCTURAL CONSULTANT

CIVIL CONSULTANT
5M CIVIL LLC
12315 WYCLIFF PI
TAMPA, FL 33626

DAVID CONNER ASSOCIATES
100 East Madison Street Suite #200 Tampa, FL 33602
813.258.1997 | dconnerassociates.com | LC0000319
Planning+LandscapeArchitecture+Design

CITY OF TAMPA
FIRE STATION #23
LANDSCAPE PLANS

DPW FILE NUMBER

DPW NUMBER
17-010

ISSUE DATE
2017-07-28

DRAWN BY
IG

REVISIONS

90% CONSTRUCTION
DOCUMENTS

SEAL

SHEET NUMBER
L- 400
IRRIGATION PLAN

4 OF 8

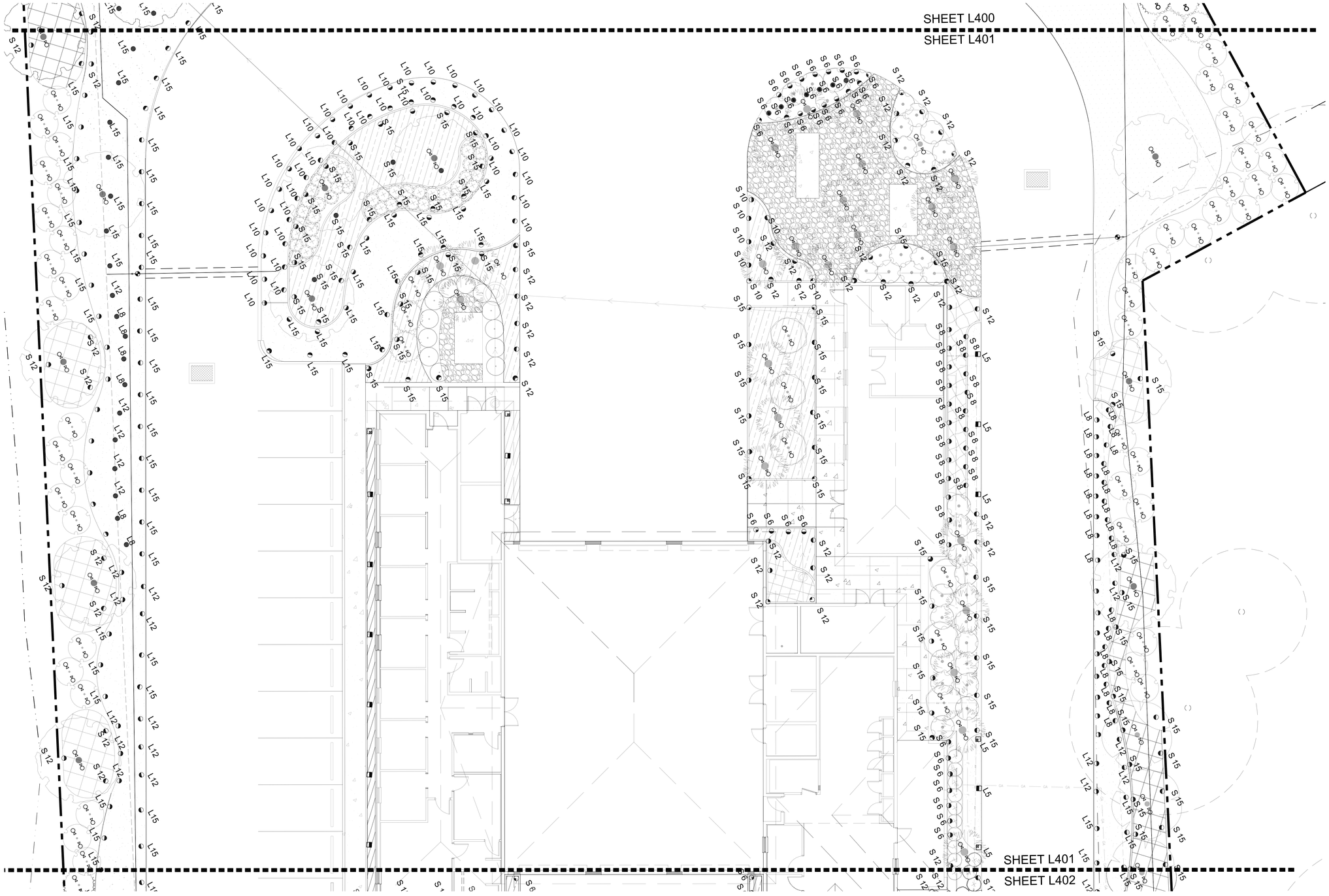

CITY OF TAMPA
CONTRACT ADMINISTRATION
DEPARTMENT
PLANNING AND DESIGN DIVISION

306 E. JACKSON STREET 4 NORTH
TAMPA, FLORIDA 33602
p: 813. 274. 8456
url: www.tampagov.net

James E. Jackson, Jr. AIA, NOMA
City Architect
Edward D. Rice, AIA
Project Architect
Kevin L. Henika, AIA
Project Architect
Thomas A. Hester, Sr., AIA, NOMA
Project Architect
David R. Pagitt
Supervisor, Architectural Drafting
Kinsey C. Tillman
Drafting Technician
Jerry P. Sanders
Drafting Technician
Byron K. Thomas
Drafting Technician

MEP CONSULTANT

STRUCTURAL CONSULTANT

CIVIL CONSULTANT
5M CIVIL LLC
12315 WYCLIFF PI
TAMPA, FL 33626

DAVID CONNER ASSOCIATES
100 East Madison Street Suite #200 Tampa, FL 33602
813.258.1997 | dconnerassociates.com | LC0000319
Planning+LandscapeArchitecture+Design

CITY OF TAMPA
FIRE STATION #23
LANDSCAPE PLANS

DPW FILE NUMBER

DPW NUMBER
17-010

ISSUE DATE
2017-07-28

DRAWN BY
IG

REVISIONS

90% CONSTRUCTION
DOCUMENTS

SEAL

SHEET NUMBER
L- 401
IRRIGATION PLAN

5 OF 8

0 5 10 20 30

Always call 811 two full business days before you dig
Sunshine811.com

SHEET L401

SHEET L402

1 ½" SCH. 40 PVC LOOP MAIN

1 ½" IRRIGATION METER WITH 1 ½" DOUBLE CHECK VALVE 55 G.P.M @ 52 P.S.I RESIDUAL PRESSURE

0 5 10 20 30

Always call 811 two full business days before you dig

Sunshine811.com

CITY OF TAMPA
CONTRACT ADMINISTRATION
DEPARTMENT
PLANNING AND DESIGN DIVISION

306 E. JACKSON STREET 4 NORTH
TAMPA, FLORIDA 33602
pr. 813. 274. 8456
url: www.tampagov.net

James E. Jackson, Jr. AIA, NOMA
City Architect
Edward D. Rice, AIA
Project Architect
Kevin L. Henika, AIA
Project Architect
Thomas A. Hester, Sr., AIA, NOMA
Project Architect
David R. Pagitt
Supervisor, Architectural Drafting
Kinsey C. Tillman
Drafting Technician
Jerry P. Sanders
Drafting Technician
Byron K. Thomas
Drafting Technician

MEP CONSULTANT

STRUCTURAL CONSULTANT

CIVIL CONSULTANT
5M CIVIL LLC
12315 WYCLIFF PI
TAMPA, FL 33626

DAVID CONNER ASSOCIATES
100 East Madison Street Suite #200 Tampa, FL 33602
813.258.1997 | dconnerassociates.com | LC0000319
Planning+LandscapeArchitecture+Design

CITY OF TAMPA
FIRE STATION #23
LANDSCAPE PLANS

DPW FILE NUMBER

DPW NUMBER
17-010

ISSUE DATE
2017-07-28

DRAWN BY
IG

REVISIONS

90% CONSTRUCTION
DOCUMENTS

SEAL

SHEET NUMBER
L- 402
IRRIGATION PLAN

IRRIGATION SYSTEM LEGEND

SYMBOL	MODEL / DESCRIPTION	TYPE	MOUNT / BODY TYPE	PERFORMANCE						NOTES		
				RADIUS	ARC	O.P.	FLOW GPM	FLOW GPH	PRECIP. IN/HR			
5-CST-B	HUNTER 5-CST-B CENTER SPRAY BUBBLER NOZZLE	PLANTER BUBBLER	PROS-04-SI W/ SJ-512 ¾"X12" SWING JOINT	5 FT. LINEAR STRIP	CENTER STRIP	40	.42	26		INSTALL (6) INSIDE RAISED PLANTER		
MSBN-10H	HUNTER MSBN-10H MULTI-STREAM BUBBLER NOZZLE	TREE BUBBLER	PROS-04-SI W/ SJ-512 ¾"X12" SWING JOINT	1.5 FT.	3-STREAM 180 DEG.	40	1.5	90		(2) PER TREE / PALM		
S 6	HUNTER MP ROTATOR MP 800	12" POP-UP ROTATOR FOR SHRUBS	PROS-12-SI W/ SJ-512 ¾"X12" SWING JOINT	6 FT.	90 DEGREE	40	.21	12.6	.41-.48			
S 8 S 10	HUNTER MP ROTATOR MP1000-90; 8'-15' RADIUS ADJUSTABLE ARC 90 DEG. TO 210 DEG.			8 FT. 10 FT.	120 DEGREE 180 DEGREE	40 40	.31 .42	18.9 25.2	.41-.48 .41-.48			
S 12 S 15	HUNTER MP ROTATOR MP1000-210; 8'-15' RADIUS ADJUSTABLE ARC 210 DEG. TO 360 DEG.			12 FT. 15 FT.	210 DEGREE 270 DEGREE	40 40	.49 .63	29.4 37.8	.41-.48 .41-.48			
L 6	HUNTER MP ROTATOR MP 800	4" POP-UP ROTATOR FOR LAWNS	PROS-04-SI W/ SJ-512 ¾"X12" SWING JOINT	6 FT.	90 DEGREE	40	.21	12.6	.41-.48			
L 8	HUNTER MP ROTATOR MP1000-120			8 FT.	120 DEGREE	40	.31	18.9	.41-.48			
L 10	HUNTER MP ROTATOR MP1000-180			10 FT.	180 DEGREE	40	.42	25.2	.41-.48			
L 12	HUNTER MP ROTATOR MP1000-210			12 FT.	210 DEGREE	40	.49	29.4	.41-.48			
L 15	HUNTER MP ROTATOR MP1000-270			15 FT.	270 DEGREE	40	.63	37.8	.41-.48			
CSR 5	HUNTER MPLCS515 MP RIGHT CORNER STRIP POP-UP SPRAY			5 X 15 FT.	RECT.	40	.22	13.2	.41-.48			
CSR 5	HUNTER MPLCS515 MP RIGHT CORNER STRIP POP-UP SPRAY			5 X 15 FT.	RECT.	40	.44	13.2	.41-.48			
CSL 5	HUNTER MPLCS515 MP LEFT CORNER STRIP POP-UP SPRAY			5 X 15 FT.	RECT.	40	.22	13.2	.41-.48			
CSL 5	HUNTER MPLCS515 MP LEFT CORNER STRIP POP-UP SPRAY			5 X 15 FT.	RECT.	40	.22	13.2	.41-.48			
	1" GATE VALVE; NIBCO-SCOTT T-113 BRASS GATE VALVE INSTALLED IN METER SIZE PLASTIC VALVE BOX WITH LID; BROOKS, AMETEK OR APPROVED EQUAL;	GATE VALVE								VALVE SHALL FUNCTION AS MAIN SHUT-OFF OR ISOLATION FOR SYSTEM EXPANSION OR SHUT-DOWN		
	HUNTER MODEL PGV-101JT 1" AUTOMATIC ZONE CONTROL VALVE; HUNTER PGV-101JT (FEMALE INLET/OUTLET) ELECTRIC REMOTE CONTROL VALVE	AUTO CONTROL VALVE								INSTALLED IN METER SIZE VALVE BOX WITH LID; BROOKS, AMETEK OR APPROVED EQUAL; INSTALL VALVES WITH APPROVED WATER PROOF WIRE CONNECTORS AND CONTROL WIRE MINIMUM SIZE #14 AWG, TYPE 'UF' IN GREY PVC CONDUIT FROM VALVES TO CONTROLLER IN MAIN LINE IRRIGATION TRENCH; COMMON WIRE TO BE WHITE 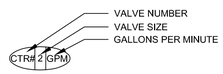		
C	HUNTER PCC-1200 FIXED STATION OUTDOOR SPRINKLER CONTROLLER, 120 VAC INTERNAL TRANSFORMER AND PLASTIC CABINET									IRRIGATION CONTROLLER INSTALLED AT SOUTH WALL SHOWN; CONNECT TO W.P. J.B. OPPOSITE OF LIGHTING TRANSFORMER AS SHOWN IN DETAILS; INSTALL WITH HUNTER MINI-CLIK RAIN SENSOR AND BY-PASS SWITCH IN ACCORDANCE WITH MANUFACTURERS INSTRUCTIONS; PLASTIC CABINET; CONFIRM FINAL LOCATION WITH OWNER'S REPRESENTATIVE PRIOR TO INSTALL; INSTALL CONTROLLER WITH LIGHTNING PROTECTION PER DETAILS; ALL ELECTRICAL WORK SHALL COMPLY WITH N.E.C. NOTE: ALL LINE VOLTAGE POWER INSTALLATION WORK SHALL BE PERFORMED BY A QUALIFIED LICENSED ELECTRICIAN		
JB	JUNCTION BOX									PLASTIC METER SIZE JUNCTION BOX WITH LID; FOR WIRE JUNCTION AND MAKE-UP WIRE SPLICE AND DIRECTION CHANGE		
	TYPE 'UF' #14 LOW-VOLTAGE CONTROL WIRE WITH TYPE 'UF' #12 LOW-VOLTAGE COMMON WIRE IN GREY PVC CONDUIT TO ALL VALVES AND CONTROLLER									INSTALL MINIMUM 24" BELOW PAVEMENT FINISH SURFACES AND MINIMUM OF 18" IN LANDSCAPE AREAS; EXTEND SLEEVE 12" BEYOND PAVEMENTS		
	SLEEVE PIPE; 4" SCHEDULE 40 PVC									INSTALL MINIMUM 24" BELOW PAVEMENT FINISH SURFACES AND MINIMUM OF 18" IN LANDSCAPE AREAS; EXTEND SLEEVE 12" BEYOND PAVEMENTS; SIZE SHALL BE (2) DIAMETERS LARGER THAN LATERAL OR MAIN PIPE INSIDE TO EASILY ALLOW FOR IRRIGATION PIPING AND COUPLINGS TO EASILY SLIDE THROUGH SLEEVING MATERIAL OR AS SPECIFICALLY NOTED OTHERWISE		
	IRRIGATION MAIN LINE PRESSURE PIPE WITH SOLVENT WELD FITTINGS & JOINTS; SCHEDULE 40 PVC									INSTALL ALL CONTROL WIRE/CONDUIT IN SAME TRENCH WITH THE MAIN LINE		
	IRRIGATION LATERAL PIPE WITH SOLVENT WELD FITTINGS & JOINTS; PVC CLASS 200, SDR 21;									ONLY LATERALS WITH PIPE SIZES OF ¾" AND ABOVE ARE INDICATED ON THE PLAN, WITH ALL OTHERS BEING ½" SIZE		
M	¾" IRRIGATION WATER METER INSTALLED IN ACCORDANCE WITH LOCAL CODES			SIZED TO LIMIT PRESSURE LOSS AT DESIGN FLOW TO A MAXIMUM OF 5%						FURNISH & INSTALL 1" DOUBLE CHECK VALVE BACKFLOW PREVENTOR INSIDE CONCRETE PAD IN ACCORDANCE WITH LOCAL CODES		
	1" DOUBLE CHECK VALVE BACKFLOW PREVENTOR INSTALLED WITH SCHEDULE 40 PVC RISERS; INSTALL (2) CUBIC FEET OF 2,500 PSI CONCRETE AROUND RISERS 12" BELOW GRADE TO STABILIZE; INSTALL PER LOCAL CODES											

NOTE:

QUANTITIES EITHER GIVEN OR NOT GIVEN SHALL
BE VERIFIED AND DETERMINED BY THE CONTRACTOR PRIOR TO BID

IRRIGATION NOTES:

1. Irrigation system design requirements; 28 GPM @ a minimum of 60 PSI at the point of connection. The Irrigation Contractor shall verify the available GPM and PSI prior to installation of the system.
2. Do not willfully install the irrigation system as shown on the drawings when it is obvious in the field that conditions exist that might not have been considered in the design process. For example : obstructions, grade differences, water levels, dimensional differences, etc. Refer to the Landscape Plan to avoid conflicts with proposed trees or shrubs.
3. Piping may sometimes be indicated as being located in unlikely areas: i.e., under buildings or pavement, outside of property lines, in lakes or ditches, etc. This is done for graphic clarity only. Whenever possible, piping is to be installed in open, green" areas.
4. If required, the Irrigation Contractor shall provide the necessary "Right of Way" use permits.
5. Pipe sizes shall conform to those on the drawings. Substituting with smaller pipe sizes will not be permitted.
6. Mainline is to be installed with a minimum of 18" depth of cover. Lateral lines are to be installed with a minimum of 12" depth of cover.
7. Unless otherwise indicated, all sleeves are to be PVC Sch 40 and two (2) nominal sizes larger than the pipe to be sleeved. For example: The sleeve for a 2" pipe shall be 3". No irrigation sleeve shall be smaller than 2".
8. Wherever practical, install valves in mulched beds and/or out of high traffic areas. All valves , flush valves and wire splices shall be installed in Rain Bird wide flanged, structural foam "plastic" valves boxes as follows:

Remote Control Valves	#VB-STD, 12" std. rect. box
Isolation Gate Valves	#VB-10RND, 10" round box
Wire Splices	#VB-10RND, 10" round box
Drip Zone Valve / Filter Assy	#VB-SPR, Super Jumbo Rect. box

9. Refer to Valve Designation Symbols for controller, station number and designed flow rate for each remote control valve.
10. All 24 volt control cable to be UL Listed, single strand, type UF 600 Volt control cable. Size and color as follows:

Common Wires	- size AWG #14 or larger and WHITE in color.
Hot Wires	- size AWG #16 or larger and RED in color.
Spare Wires	- size AWG #16 or larger and BLUE in color.

11. All splices to the 24 volt control wiring shall be made with Rain Bird #DBTWC 24-600 volt, direct bury splice kits.
12. All control valve wires shall be bundled and taped together at 20' intervals and placed along the side of the mainline pipe.
13. All pop-up sprinkler heads shall be installed level and flush to grade. Mount all sprinklers on flexible connections as follows:

1/2" inlet spray heads	18" of Heavy Wall PVC IPS Hose
3/4" inlet rotor heads	18" of Heavy Wall PVC IPS Hose

14. The tops of all shrub sprinklers shall be installed 12" above the height of the surrounding plant material. For plant heights of 12" or more, support the riser with a #5 rebar stake and nylon cable ties. All risers shall be placed a minimum of 12" from any sidewalk, edge of pavement or structure.
15. Location of all sprinkler heads shall be site adjusted to minimize water overthrow onto building surfaces and walkways. Throttle valves on spray zones as required to prevent fogging.
16. Install drip tubing at grade and cover with mulch. Typical spacing for drip tubing is 18" to 24" on center. Spacing to be determined by plant layout. Refer to Landscape Plan. Anchor tubing every 7' with 8" long wire tubing stakes. Install flush valve assemblies at all tubing "dead ends".
17. Exact controller location(s) shall be coordinated with an Owner's Representative prior to installation. Unless otherwise stated, the General Contractor shall provide 110 volt power to the controller location(s). The Irrigation Contractor is responsible for the connection from the power source to the controller(s).
18. At each irrigation controller, install a "secondary surge arrester" to the incoming (120 volt) power supply (Intermatic #AG2401 or equal).
19. At each irrigation controller, install an "supplementary earth ground grid" with a minimum of two (2) 4" x 96" grounding plates. Test the resistance to earth per NFPA Standard #780. A acceptable earth ground should have 15 ohms or less resistance. Use more plates or grounding rods as needed to achieve the desired resistance reading.
20. A weather based sensor with interface shall be connected to the irrigation controller. The sensor/ interface shall adjust the irrigation program based on daily weather readings. The sensor shall be installed to meet local codes and/or minimum manufacturer's recommendations. Obstructions, vandalism and ease of service shall be considered in locating the device.
21. The IRRIGATION CONTRACTOR shall prepare an AS-BUILT drawing on reproducible paper detailing the actual installation of the irrigation system. The AS-BUILT drawings shall locate all main line piping, control wires, wire splices, sleeves and valves by showing exact measurements from permanent features (buildings, edge of pavement, power poles, fire hydrants, etc.). Include depth of cover on mainline and sleeves.
22. No product substitutions will be permitted without the written permission of the Owner's Representative. Irrigation Contractor to provide submittals to the Owner's Representative for approval prior to installation.
23. Any other equipment required that is not other wise detailed or specified shall be installed as per manufacturer's recommendations and local code.

Always call 811 two full business days before you dig

Sunshine811.com

CITY OF TAMPA
CONTRACT ADMINISTRATION DEPARTMENT
PLANNING AND DESIGN DIVISION
306 E. JACKSON STREET 4 NORTH
TAMPA, FLORIDA 33602
p: 813. 274. 8456
url www.tampagov.net

James E. Jackson, Jr. AIA, NOMA
City Architect
Edward D. Rice, AIA
Project Architect
Kevin L. Henika, AIA
Project Architect
Thomas A. Hester, Sr., AIA, NOMA
Project Architect
David R. Pagitt
Supervisor, Architectural Drafting
Kinsey C. Tillman
Drafting Technician
Jerry P. Sanders
Drafting Technician
Byron K. Thomas
Drafting Technician

MEP CONSULTANT

STRUCTURAL CONSULTANT

CIVIL CONSULTANT
5M CIVIL LLC
12315 WYCLIFF PI
TAMPA, FL 33626

DAVID CONNER ASSOCIATES
100 East Madison Street Suite #200 Tampa, FL 33602
813.258.1997 | dconnerassociates.com | LC0000319
Planning+LandscapeArchitecture+Design

CITY OF TAMPA
FIRE STATION #23
LANDSCAPE PLANS

DPW FILE NUMBER

DPW NUMBER
17-010

ISSUE DATE
2017-07-28

DRAWN BY
IG

REVISIONS
△
△
90% CONSTRUCTION DOCUMENTS

SEAL

SHEET NUMBER
L- 403 IRRIGATION NOTES AND SCHEDULE

7 OF 8

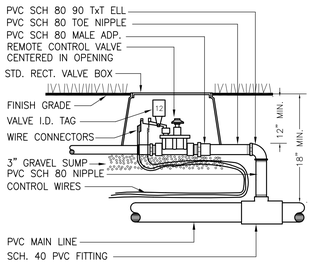

REMOTE CONTROL VALVE

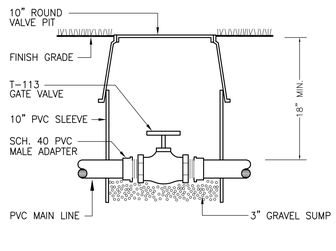

ISOLATION GATE VALVE

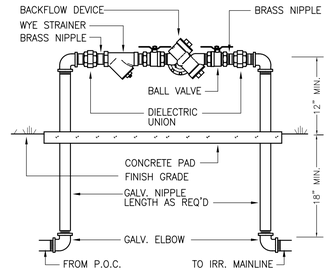

BACKFLOW PREVENTOR

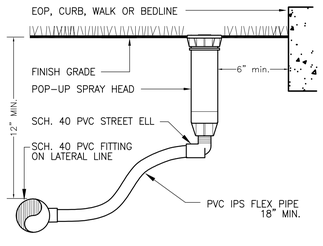

TURF SPRAY HEAD

PROVIDE 12" MIN. SPACE BETWEEN ALL SPRINKLER HEADS AND ANY WALL OR STRUCTURE

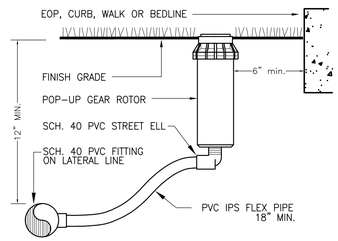

TURF ROTOR HEAD

PROVIDE 12" MIN. SPACE BETWEEN ALL SPRINKLER HEADS AND ANY WALL OR STRUCTURE

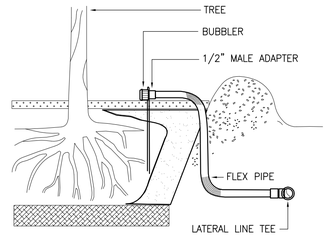

TREE BUBBLER

INSTALL FLEX PIPE (LOCATION AND DEPTH) TO BE PROTECTED FROM MAINTENANCE OPERATIONS (EDGING, MOWING)

20 gpm DRIP ZONE CONTROL VALVE

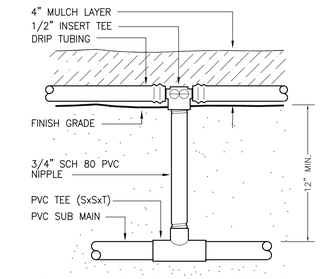

PVC – DRIP CONNECTION

PROVIDE 12" MIN. SPACE BETWEEN ALL DRIPLINES AND ANY WALL OR STRUCTURE

30 gpm DRIP ZONE CONTROL VALVE

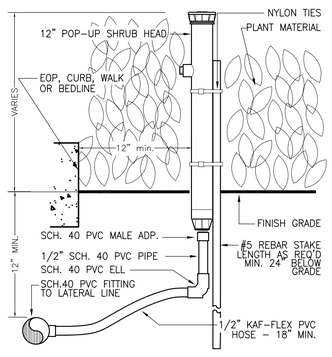

SHRUB ROTATOR HEAD

PROVIDE 12" MIN. SPACE BETWEEN ALL SPRINKLER HEADS AND ANY WALL OR STRUCTURE

TOP VIEW

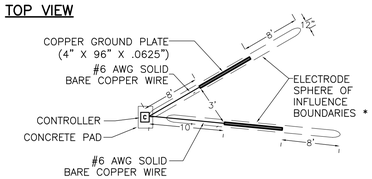

* DO NOT INSTALL ANY OTHER WIRES OR CABLE WITHIN THE SPHERE OF INFLUENCE

SIDE VIEW

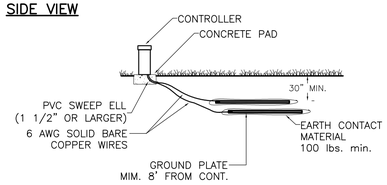

MINIMUM ACCEPTABLE RESISTANEC TO GROUND IS 15 OHMS. USE ADDITIONAL GROUND PLATES OR GROUND RODS AS NEEDED.

CONTROLLER GROUNDING

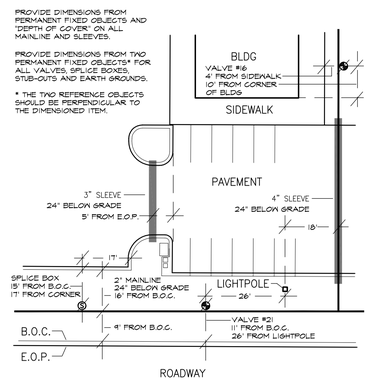

"AS BUILT" TYPICAL

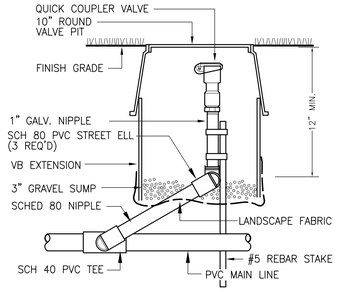

QUICK COUPLER

VALVE TO BE CENTERED IN THE VALVE BOX

Always call 811 two full business days before you dig

Sunshine811.com

CITY OF TAMPA
CONTRACT ADMINISTRATION DEPARTMENT
PLANNING AND DESIGN DIVISION
306 E. JACKSON STREET 4 NORTH
TAMPA, FLORIDA 33602
ph. 813. 274. 8456
url: www.tampagov.net

James E. Jackson, Jr. AIA, NOMA
City Architect
Edward D. Rice, AIA
Project Architect
Kevin L. Henika, AIA
Project Architect
Thomas A. Hester, Sr., AIA, NOMA
Project Architect
David R. Pagitt
Supervisor, Architectural Drafting
Kinsey C. Tillman
Drafting Technician
Jerry P. Sanders
Drafting Technician
Byron K. Thomas
Drafting Technician

MEP CONSULTANT

STRUCTURAL CONSULTANT

CIVIL CONSULTANT
5M CIVIL LLC
12315 WYCLIFF PI
TAMPA, FL 33626

DAVID CONNER ASSOCIATES
100 East Madison Street Suite #200 Tampa, FL 33602
813.258.1997 | dconnerassociates.com | LC0000319
Planning+LandscapeArchitecture+Design

CITY OF TAMPA
FIRE STATION #23
LANDSCAPE PLANS

DPW FILE NUMBER

DPW NUMBER
17-010

ISSUE DATE
2017-07-28

DRAWN BY
IG

REVISIONS

90% CONSTRUCTION DOCUMENTS

SEAL

SHEET NUMBER
L-440
IRRIGATION DETAILS

8 OF 8

GENERAL STRUCTURAL NOTES

SCOPE OF WORK

1. WORK DETAILED ON THE DRAWINGS AND APPLICABLE ITEMS DESCRIBED IN THE GENERAL STRUCTURAL NOTES.

DRAWINGS AND SPECIFICATIONS

1. DO NOT SCALE DRAWINGS FOR DIMENSIONS NOT GIVEN.
2. ADVISE ENGINEER OF DIMENSIONAL DISCREPANCIES.
3. VERIFY ALL EXISTING FIELD CONDITIONS AND DIMENSIONS PRIOR TO COMMENCING CONSTRUCTION.
4. THE CONTRACTOR SHALL PERFORM NO PORTION OF THE WORK AT ANY TIME WITHOUT CONTRACT DOCUMENTS OR, WHERE REQUIRED, APPROVED SHOP DRAWINGS, PRODUCT DATA OR SAMPLES FOR SUCH PORTION OF THE WORK.

CONSTRUCTION SAFETY

1. THESE DRAWINGS DO NOT INCLUDE PROVISIONS TO SATISFY SAFETY REQUIREMENTS. CONTRACTOR IS SOLELY RESPONSIBLE FOR ENSURING SAFETY DURING CONSTRUCTION AND FOR CONFORMANCE TO ALL APPLICABLE OSHA STANDARDS AND OTHER APPLICABLE CODES. JOBSITE VISITS BY ENGINEER SHALL NOT CONSTITUTE APPROVAL, AWARENESS OR LIABILITY FOR ANY HAZARDOUS CONDITIONS.

SHORING AND SUPPORT

1. WHEN REMOVAL OF STRUCTURAL ELEMENTS FOR MODIFICATIONS MAY CAUSE TEMPORARY WEAKNESS, EXCESSIVE DEFLECTIONS OR STRUCTURAL INSTABILITY, SHORING OR OTHER SUITABLE SUPPORTS SHALL BE PROVIDED UNTIL COMPLETION AND ADEQUATE CURING OF MODIFICATIONS.
2. THE CONTRACTOR SHALL SUBMIT CUT SHEETS WITH CERTIFIED CAPACITIES FOR SHORING TO BE USED. SHORING PLANS SHALL BE PREPARED, SIGNED AND SEALED BY AN ENGINEER REGISTERED IN THE STATE OF FLORIDA.

VALUE ENGINEERING

1. ANY CHANGES TO THE STRUCTURE OR DESIGN SHALL HAVE BEEN REVIEWED AND APPROVED IN WRITING BY THE ENGINEER PRIOR TO COMMENCING WORK ON ITEMS AFFECTED.

FIELD MODIFICATIONS

1. ANY CHANGES TO THE STRUCTURE SHALL HAVE BEEN REVIEWED AND APPROVED IN WRITING BY THE ENGINEER PRIOR TO COMMENCING WORK ON ITEMS AFFECTED.
2. ANY CHANGES MADE WITHOUT PRIOR APPROVAL ARE SUBJECT TO REVIEW BY THE ENGINEER. CONTRACTOR SHALL PROVIDE SKETCHES, PHOTOGRAPHS AND WRITTEN DESCRIPTION OF EACH DEVIATION FROM THE PLANS FOR THE ENGINEER'S REVIEW.

BUILDING CODES AND SPECIFICATIONS

1. FLORIDA BUILDING CODE 5TH EDITION (2014).
2. MINIMUM DESIGN LOADS FOR BUILDINGS AND OTHER STRUCTURES ASCE 7-10.
3. BUILDING CODE REQUIREMENTS FOR MASONRY STRUCTURES ACI 530-11 / ASCE 5-11 / TMS 402-11.
4. BUILDING CODE REQUIREMENTS FOR STRUCTURAL CONCRETE ACI 318-11.
5. NATIONAL DESIGN STANDARD FOR METAL PLATE CONNECTED WOOD TRUSS CONSTRUCTION ANSI / TPI 1 - 2014.
6. AF & PA'S NATIONAL DESIGN SPECIFICATION FOR WOOD CONSTRUCTION 2012.

DESIGN LOADS

1. DEAD LOADS
   A. TABLE C3-1: MINIMUM DESIGN LOADS, ASCE 7-10
2. LIVE LOADS
   A. ROOF .....20 PSF
   B. FLOOR/SIDEWALK.....100PSF
3. WIND LOAD
   A. ULTIMATE DESIGN WIND SPEED .....148 MPH (3 SECOND GUST)
   B. NOMINAL DESIGN WIND SPEED .....115 MPH (3 SECOND GUST)
   C. EXPOSURE CATEGORY C
   D. ASCE 7 BUILDING RISK CATEGORY IV
   E. ENCLOSED BUILDING
4. COMPONENTS AND CLADDING
   A. SPECIALTY ENGINEER DESIGNING THE COMPONENTS AND CLADDING SHOULD DETERMINE THE TRIBUTARY AREA FOR SUCH COMPONENTS AND CLADDING AND USE THE TABLE FOR THE AREA EQUAL TO OR SMALLER THAN THE ACTUAL TRIBUTARY AREA.
   B. COMPONENTS AND CLADDING SUB-CONTRACTOR SHALL PROVIDE SIGNED AND SEALED DRAWINGS AND CALCULATIONS PREPARED BY A PROFESSIONAL ENGINEER REGISTERED IN THE STATE OF FLORIDA. DOCUMENTATION SHALL INCLUDED THE DESIGN OF THE COMPONENTS AND CLADDING, AND CONNECTIONS TO THE MAIN STRUCTURE.

5. ROOF COMPONENTS AND CLADDING PITCHED ROOF AREA (7° < 0 ≤ 27°)

PRESSURE							
EFFECTIVE WIND	EXTERNAL PRESSURE COEFFICIENT GCp			INTERNAL PRESSURE	P (psf)		
AREA (SQ. FT.)	ZONE 1	ZONE 2	ZONE3	COEFFICIENT GCpi	ZONE 1	ZONE 2	ZONE3
< 10	0.50	0.50	0.50	0.18	30.37	30.37	30.37
20	0.42	0.42	0.42	0.18	26.80	26.80	26.80
50	0.38	0.38	0.38	0.18	25.01	25.01	25.01
100 <	0.30	0.30	0.30	0.18	21.44	21.44	21.44
SUCTION							
EFFECTIVE WIND	EXTERNAL PRESSURE COEFFICIENT GCp			INTERNAL PRESSURE	P (psf)		
AREA (SQ. FT.)	ZONE 1	ZONE 2	ZONE3	COEFFICIENT GCpi	ZONE 1	ZONE 2	ZONE3
< 10	-0.90	-1.70	-2.60	-0.18	-48.23	-83.96	-124.16
20	-0.85	-1.58	-2.40	-0.18	-46.00	-78.60	-115.23
50	-0.82	-1.38	-2.20	-0.18	-44.66	-69.67	-106.29
100 <	-0.80	-1.20	-2.00	-0.18	-43.77	-61.63	-97.36

OVERHANG COMPONENTS OF CLADDING

SUCTION							
EFFECTIVE WIND	EXTERNAL PRESSURE COEFFICIENT GCp			INTERNAL PRESSURE	P (psf)		
AREA (SQ. FT.)	ZONE 2	ZONE 3		COEFFICIENT GCpi	ZONE 2	ZONE 3	
< 10	-2.20	-3.70		-0.18	-106.29	-173.28	
20	-2.20	-3.39		-0.18	-106.29	-159.44	
50	-2.20	-2.82		-0.18	-106.29	-133.98	
100 <	-2.20	-2.50		-0.18	-106.29	-119.69	

***WIND LOADS BASED ON LRFD VALUES OF ASCE 7-10**

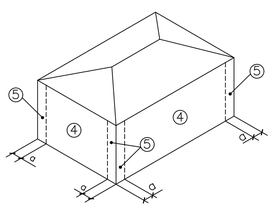

WALLS
a=4'-0"

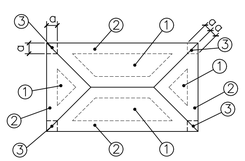

ROOF
a=4'-0"

6. ROOF COMPONENTS AND CLADDING PITCHED ROOF AREA (7° < 0 ≤ 27°)

PRESSURE							
EFFECTIVE WIND	EXTERNAL PRESSURE COEFFICIENT GCp			INTERNAL PRESSURE	P (psf)		
AREA (SQ. FT.)	ZONE 1	ZONE 2	ZONE3	COEFFICIENT GCpi	ZONE 1	ZONE 2	ZONE3
< 10	0.50	0.50	0.50	0.18	18.22	18.22	18.22
20	0.42	0.42	0.42	0.18	16.08	16.08	16.08
50	0.38	0.38	0.38	0.18	15.01	15.01	15.01
100 <	0.30	0.30	0.30	0.18	12.86	12.86	12.86
SUCTION							
EFFECTIVE WIND	EXTERNAL PRESSURE COEFFICIENT GCp			INTERNAL PRESSURE	P (psf)		
AREA (SQ. FT.)	ZONE 1	ZONE 2	ZONE3	COEFFICIENT GCpi	ZONE 1	ZONE 2	ZONE3
< 10	-0.90	-1.70	-2.60	-0.18	-28.94	-50.38	-74.49
20	-0.85	-1.58	-2.40	-0.18	-27.60	-47.16	-69.14
50	-0.82	-1.38	-2.20	-0.18	-26.80	-41.80	-63.78
100 <	-0.80	-1.20	-2.00	-0.18	-26.26	-36.98	-58.42

OVERHANG COMPONENTS OF CLADDING

SUCTION							
EFFECTIVE WIND	EXTERNAL PRESSURE COEFFICIENT GCp			INTERNAL PRESSURE	P (psf)		
AREA (SQ. FT.)	ZONE 2	ZONE 3		COEFFICIENT GCpi	ZONE 2	ZONE 3	
< 10	-2.20	-3.70		-0.18	-63.78	-103.97	
20	-2.20	-3.39		-0.18	-63.78	-95.66	
50	-2.20	-2.82		-0.18	-63.78	-80.39	
100 <	-2.20	-2.50		-0.18	-63.78	-71.81	

***WIND LOADS BASED ON ASD VALUES OF ASCE 7-10**

7. WALL COMPONENTS AND CLADDING

PRESSURE						
EFFECTIVE WIND	EXTERNAL PRESSURE COEFFICIENT GCp			INTERNAL PRESSURE	P (psf)	
AREA (SQ. FT.)	ZONE 4	ZONE 5		COEFFICIENT GCpi	ZONE 4	ZONE 5
< 10	1.00	1.00		0.18	52.70	52.70
20	0.95	0.95		0.18	50.47	50.47
50	0.90	0.90		0.18	48.23	48.23
100	0.81	0.81		0.18	44.21	44.21
200	0.78	0.78		0.18	42.87	42.87
500 <	0.70	0.70		0.18	39.30	39.30
SUCTION						
EFFECTIVE WIND	EXTERNAL PRESSURE COEFFICIENT GCp			INTERNAL PRESSURE	P (psf)	
AREA (SQ. FT.)	ZONE 4	ZONE 5		COEFFICIENT GCpi	ZONE 4	ZONE 5
< 10	-1.10	-1.40		-0.18	-57.17	-70.56
20	-1.05	-1.30		-0.18	-54.93	-66.10
50	-0.98	-1.15		-0.18	-51.81	-59.40
100	-0.92	-1.02		-0.18	-49.13	-53.59
200	-0.85	-0.95		-0.18	-46.00	-50.47
500 <	-0.80	-0.80		-0.18	-43.77	-43.77

***WIND LOADS BASED ON LRFD VALUES OF ASCE 7-10**

8. WALL COMPONENTS AND CLADDING

PRESSURE						
EFFECTIVE WIND	EXTERNAL PRESSURE COEFFICIENT GCp			INTERNAL PRESSURE	P (psf)	
AREA (SQ. FT.)	ZONE 4	ZONE 5		COEFFICIENT GCpi	ZONE 4	ZONE 5
< 10	1.00	1.00		0.18	31.62	31.62
20	0.95	0.95		0.18	30.28	30.28
50	0.90	0.90		0.18	28.94	28.94
100	0.81	0.81		0.18	26.53	26.53
200	0.78	0.78		0.18	25.72	25.72
500 <	0.70	0.70		0.18	23.58	23.58
SUCTION						
EFFECTIVE WIND	EXTERNAL PRESSURE COEFFICIENT GCp			INTERNAL PRESSURE	P (psf)	
AREA (SQ. FT.)	ZONE 4	ZONE 5		COEFFICIENT GCpi	ZONE 4	ZONE 5
< 10	-1.10	-1.40		-0.18	-34.30	-42.34
20	-1.05	-1.30		-0.18	-32.96	-39.66
50	-0.98	-1.15		-0.18	-31.08	-35.64
100	-0.92	-1.02		-0.18	-29.48	-32.16
200	-0.85	-0.95		-0.18	-27.60	-30.28
500 <	-0.80	-0.80		-0.18	-26.26	-26.26

***WIND LOADS BASED ON ASD VALUES OF ASCE 7-10**

FOUNDATIONS

1. FOUNDATION DESIGN BASED ON 2500 PSF MINIMUM ALLOWABLE BEARING PRESSURE, PER REPORT OF GEOTECHNICAL INVESTIGATION PREPARED BY FAULKNER ENGINEERING SERVICES, INC., FES PROJECT NO. : 17-3420, DATED JULY 13, 2017.
2. NOTIFY ENGINEER IF FOOTING EXCAVATION REVEALS UNSUITABLE OR UNSTABLE SOILS OR MATERIALS OR CONDITIONS NOT PREVIOUSLY ANTICIPATED.
3. CONTRACTOR SHALL CONSIDER THE POSSIBLE IMPACT OF GROUNDWATER ON CONSTRUCTION TECHNIQUES, SEASONAL VARIATIONS, ANY OTHER SITE INDICATORS AND HIS OWN JUDGMENT.
4. SOIL DIRECTLY BELOW FOUNDATIONS AND SLAB ON GRADE SHALL BE COMPACTED TO 95% OF THE ASTM D 1557 (MODIFIED PROCTOR) MAXIMUM DRY DENSITY.
5. PREPARE SITE AND SOILS IN ACCORDANCE WITH REPORT OF GEOTECHNICAL INVESTIGATIONS PREPARED BY FAULKNER ENGINEERING SERVICES, INC., LISTED ABOVE.

PORTLAND CEMENT CONCRETE

1. CONCRETE PROPERTIES
   A. BEAMS, COLUMNS, AND FOUNDATIONS 4000 PSI, 3" TO 5" SLUMP
   B. FILLED CELLS IN CMU 3000 PSI, 8" TO 11" SLUMP, 3/8" PEA GRAVEL
2. FLY ASH SHALL NOT EXCEED 20 PERCENT BY WEIGHT OF TOTAL CEMENT, IF USED.
3. CONTRACTOR SHALL STRICTLY ADHERE TO SLUMP LIMITS. SUPERPLASTICIZER MAY BE USED AT THE CONTRACTORS OPTION TO INCREASE WORKABILITY.
4. MAXIMUM MIXING TIME (FROM BATCHING TO PLACEMENT)
   A. AIR TEMPERATURE LESS THAN 85° F: 90 MINUTES
   B. AIR TEMPERATURE 85° F TO 90° F: 75 MINUTES
   C. AIR TEMPERATURE OVER 90° F: 60 MINUTES
5. MINIMUM COVER FOR REINFORCEMENT
   A. FOOTINGS, 3 INCHES TO BOTTOM AND UNFORMED SIDES, 2 INCHES TO FORMED SIDES
   B. OTHER, 2 INCHES TO MAIN REINFORCING, 1 ½" INCHES TO TIES AND STIRRUPS.
6. ALL REINFORCEMENT SHALL BE SECURELY HELD IN PLACE BY STANDARD ACCESSORIES DURING CONCRETE PLACEMENT.
7. REINFORCEMENT SHALL BE GRADE 60 CONFORMING TO ASTM A615.
8. WELDED WIRE FABRIC SHALL CONFORM TO ASTM A185.
9. DETAIL AND FABRICATE REINFORCEMENT IN ACCORDANCE WITH "MANUAL OF STANDARD PRACTICE FOR DETAILING REINFORCED CONCRETE STRUCTURES," ACI 315.
10. PROVIDE MINIMUM LAP SPLICES PER ACI 318-10 FOR ALL REINFORCING BARS, UNLESS OTHERWISE NOTED. STAGGER SPLICES IN ADJACENT BARS AT LEAST 24 INCHES, EXCEPT IN BEAMS AND COLUMNS.
11. IN WALL FOOTINGS, GRADE BEAMS AND BOND BEAMS, PROVIDE BENT BARS AT CORNERS AND INTERSECTIONS OF THE SAME NUMBER AND SIZE AS STRAIGHT BARS.
12. APPLY CURING COMPOUND TO SLAB WITHIN TWO HOURS OF COMPLETION OF FINISHING OPERATIONS. USE LIQUID MEMBRANE FORMING COMPOUND COMPLYING WITH ASTM C309 TYPE 1 CLASS A. APPLY IN ACCORDANCE WITH MANUFACTURER'S SPECIFICATIONS.

CONCRETE SLAB ON GRADE

1. MINIMUM COMPRESSIVE STRENGTH AT 28 DAYS: 3500 PSI
2. MAXIMUM SLUMP AT POINT OF DELIVERY: 5 INCHES
3. MAXIMUM AGGREGATE SIZE: 1 INCH
4. ENTRAINED AIR CONTENT: 4.5%
5. WELDED WIRE FABRIC SHALL BE WWF 6X6-W1.4XW1.4, UNLESS OTHERWISE NOTED, CONFORMING TO ASTM A 185.
6. THE WELDED WIRE FABRIC SHALL BE PLACED IN THE CENTER OF THE DEPTH OF SLAB ON GRADE UNLESS OTHERWISE NOTED. ALL MESH JOINTS SHALL BE LAPPED TWO FULL MESHES.
7. INTERRUPT TYPICAL SLAB REINFORCEMENT AT ALL CONSTRUCTION AND EXPANSION JOINTS.
8. CUT ALTERNATE WIRES ALONG THE LINE OF SAW CUT CONTROL JOINTS PRIOR TO PLACING CONCRETE. MAKE SAW CUTS WITHIN 12 HOURS OF CONCRETE PLACEMENT, OR AS SOON AS CUTTING CAN BE DONE SUCH THAT THE SAW BLADE DOES NOT DISLODGE AGGREGATE AND THE EDGES OF THE CUT DO NOT RAVEL.
9. PROVIDE ½" PREFORMED EXPANSION JOINT MATERIAL WHERE SLAB ABUTS VERTICAL SURFACES SUCH AS WALLS AND COLUMNS.
10. PROVIDE TERMITE PROTECTION TO SOIL PER FLORIDA BUILDING CODE 2010 BEFORE SLAB PLACEMENT.
11. PROVIDE VAPOR RETARDER UNDER ALL SLABS ON GRADE IN ENCLOSED SPACE.
12. APPLY CURING COMPOUND TO SLAB WITHIN TWO HOURS OF COMPLETION OF FINISHING OPERATIONS. USE LIQUID MEMBRANE FORMING COMPOUND COMPLYING WITH ASTM C 309 TYPE 1 CLASS A. THE COMPOUND SHALL BE APPLIED IN ACCORDANCE WITH THE MANUFACTURER'S INSTRUCTIONS.
13. THE CONTRACTOR SHALL CONFIRM THAT THE CURING COMPOUND WILL NOT INTERFERE WITH THE BONDING OF ANY APPLIED FLOOR SURFACE. IF THE CURING COMPOUND IS FOUND TO INTERFERE WITH BONDING, THE USE OF WET BURLAP AND TRICKLE HOSES IS ACCEPTABLE.
14. FOR LARGE SLABS, IT IS RECOMMENDED THAT THE SLAB BE CAST IN ALTERNATING LONG STRIPS AND SAW CUT TRANSVERSELY TO MINIMIZE SHRINKAGE CRACKING.

CONCRETE MASONRY UNITS

1. BLOCKS SHALL BE HOLLOW LOAD-BEARING CONCRETE MASONRY UNITS SHALL CONFORM TO ASTM C 90 LATEST EDITION, TYPE II NON-MOISTURE CONTROLLED. THE MINIMUM NET AREA COMPRESSIVE STRENGTH SHALL BE 1500 PSI FOR AN AVERAGE OF THREE UNITS AND 1900 PSI FOR AN INDIVIDUAL UNIT. SAMPLE AND TEST MASONRY UNITS IN ACCORDANCE WITH ASTM C 140. SAMPLE AND TEST MASONRY GROUT FILL IN ACCORDANCE WITH ASTM C 39.
2. MORTAR SHALL CONFORM TO ASTM C 270 LATEST EDITION. MORTAR FOR ABOVE GRADE WORK SHALL BE TYPE S WITH A MINIMUM 28-DAY COMPRESSIVE STRENGTH OF 1800 PSI. MORTAR FOR BELOW GRADE WORK SHALL BE TYPE M MORTAR WITH A MINIMUM 28-DAY COMPRESSIVE STRENGTH OF 2500 PSI. SAMPLE AND TEST MORTAR IN ACCORDANCE WITH ASTM C 109.
3. PREFABRICATED HORIZONTAL JOINT REINFORCEMENT SHALL HAVE 9 GAGE SIDE RAILS FABRICATED FROM HIGH-STRENGTH COLD-DRAWN WIRE CONFORMING TO ASTM A 82 AND SHALL BE GALVANIZED AFTER FABRICATION. PLACE JOINT REINFORCEMENT IN ALTERNATE COURSES IN ALL WALLS. PLACE THREE ROWS AT 8 INCHES ON CENTER IMMEDIATELY ABOVE ALL WALL OPENINGS AND AT THE TOP OF ALL WALLS. LAP SIDE RAILS AT LEAST 6 INCHES AT SPLICES. JOINT REINFORCEMENT TO BE TRUSS-TYPE.
4. PROVIDE ALL SPECIAL, LINTEL, KNOCK-OUT, JAMB AND SASH BLOCK AS REQUIRED TO COMPLETE THE WALLS. MASONRY SAWS SHALL BE USED TO CUT THE BLOCK AS REQUIRED.
5. BRACE FOUNDATION WALLS BEFORE BACKFILLING AGAINST THEM TO PREVENT OVERSTRESSING, BUCKLING OR ROTATION OF THE WALLS. BRACE ALL WALLS AGAINST WIND, CONSTRUCTION LOADS OR OTHER TEMPORARY FORCES UNTIL SUCH PROTECTION IS NO LONGER REQUIRED FOR THE SAFE SUPPORT OF THE WALL. BRACING SHALL BE THE RESPONSIBILITY OF THE CONTRACTOR.
6. IN ADDITION TO REQUIREMENTS ELSEWHERE IN THE DRAWINGS FOR FILLING MASONRY CELLS, FILL CELLS WITH CONCRETE AND ONE #5 BAR AT A MAXIMUM SPACING OF 48 INCHES UNLESS OTHERWISE NOTED. FILL FIRST CELL EACH SIDE OF ANY OPENING AND FILL FIRST CELL AT END OF WALL.
7. EXTEND AND HOOK VERTICAL BARS INTO FOOTING. EXTEND AND HOOK VERTICAL BARS INTO TOP OF WALL BOND BEAM OR TIE BEAM.
8. ALL VERTICAL BARS SHALL BE SECURELY TIED TO THE LOWER BAR AT ANY SPLICES, ESPECIALLY AT THE FOOTING DOWELS. BARS SHALL BE SECURED IN THEIR PROPER POSITIONS WITHIN THE CELLS BY TIE WIRES, REBAR POSITIONERS OR BY OTHER APPROVED METHODS.
9. PROVIDE CLEANOUTS AND/OR INSPECTION PORTS FOR FILLING CELLS IN LIFTS EXCEEDING 5 FEET. LIFTS SHALL NOT EXCEED 8 FEET.
10. CONTROL JOINT SPACING ALONG A STRAIGHT WALL SHALL NOT EXCEED 25 FEET, NOR 3 TIMES THE WALL HEIGHT. USE PREFORMED NEOPRENE JOINT STRIPS AND STANDARD SASH BLOCKS.
11. PROVIDE CONTROL JOINTS IN ACCORDANCE WITH DETAILS ON THE DRAWINGS AND IN ACCORDANCE WITH THESE GUIDELINES:
    A. AT CHANGES IN WALL HEIGHT
    B. AT CHANGES IN WALL THICKNESS
    C. AT WALL OPENINGS LESS THAN 6'-0" WIDE, ONE SIDE
    D. AT WALL OPENINGS 6'-0" OR WIDER, BOTH SIDES
    E. AT CONTROL JOINTS IN APPLIED PLASTER OR MASONRY VENEER
    F. AT CHASES AND RECESSES FOR PIPES, COLUMNS, ETC.
12. IN ADDITION TO REQUIREMENTS ELSEWHERE IN THE DRAWING, PROVIDE A CONTINUOUS HORIZONTAL #5 IN FULLY GROUTED KNOCK OUT BLOCK BELOW WINDOW OPENINGS EXTENDED 8" BEYOND EACH SIDE OF OPENING.

ROUGH CARPENTRY - STRUCTURAL WOOD FRAMING AND SHEATHING

1. APPLICABLE PUBLICATIONS:
   A. WESTERN WOOD PRODUCTS ASSOCIATION PUBLICATION: *STANDARD GRADING RULES FOR WESTERN LUMBER*
   B. AMERICAN WOOD PRESERVERS INSTITUTE STANDARDS: *PRESERVATIVE TREATMENT OF WOOD BY PRESSURE METHODS*
   C. NATIONAL FOREST PRODUCTS ASSOCIATION PUBLICATION: *NATIONAL DESIGN SPECIFICATION FOR STRESS GRADED LUMBER AND ITS FASTENINGS*
   D. WEST COAST LUMBER INSPECTION BUREAU STANDARDS: *STANDARD GRADING AND DRESSING RULES FOR DOUGLAS FIR, WEST COAST HEMLOCK, SITKA SPRUCE, WHITE FIR, AND WESTERN RED CEDAR LUMBER, NO 16*
   E. SOUTHERN PINE INSPECTION BUREAU: *STANDARD GRADING RULES FOR SOUTHERN PINE LUMBER*
   F. SOUTHERN FOREST PRODUCTS ASSOCIATION
   G. NATIONAL BOARD OF FIRE UNDERWRITERS
2. LUMBER SHALL COMPLY WITH PS 20 (AMERICAN SOFTWOOD LUMBER STANDARD; NATIONAL INSTITUTE OF STANDARDS AND TECHNOLOGY) AND APPROVED GRADING RULES AND INSPECTION AGENCIES.
3. COVER WOOD PRODUCTS TO PROTECT AGAINST MOISTURE. SUPPORT STACKED PRODUCTS TO PREVENT DEFORMATION AND TO ALLOW CIRCULATION.
4. DIMENSION LUMBER
   A. GRADING AGENCY: SOUTHERN PINE INSPECTION BUREAU, INC. (SPIB)
   B. SIZES: NOMINAL SIZES AS INDICATED ON DRAWINGS, S4S
   C. MOISTURE CONTENT: S-DRY OR MC19
   D. LUMBER: S4S, SOUTHERN PINE NO. 2
5. PLYWOOD SHEATHING
   A. PS 1 (CONSTRUCTION AND INDUSTRIAL PLYWOOD; NATIONAL INSTITUTE OF STANDARDS AND TECHNOLOGY.
   B. APA RATED SHEATHING EXP
6. ALL FASTENERS TO BE HOT-DIPPED GALVANIZED STEEL FOR HIGH-HUMIDITY AND TREATED WOOD LOCATIONS.
7. PRESSURE TREATMENT OF LUMBER ABOVE GRADE SHALL BE AWPA TREATMENT C2 USING WATERBORNE PRESERVATIVE 0.25 LB/CU FT RETENTION.
8. FASTENINGS (GENERAL): THE NUMBER AND SIZE OF NAILS CONNECTING WOOD MEMBERS SHALL NOT BE LESS THAN THOSE SPECIFIED IN TABLE 2304.9.1OF THE FLORIDA BUILDING CODE 2004.
9. ALL PRESSURE TREATED WINDOW AND DOOR BUCKS SHALL BE LESS THAN 11/2 INCHES. WINDOW AND DOOR ANCHORS SPECIFIED BY MANUFACTURER SHALL BE SECURELY FASTENED INTO THE MASONRY SUBSTRATE.

PREFABRICATED WOOD TRUSSES

1. TRUSSES SHALL BE DESIGNED IN ACCORDANCE WITH THE TRUSS PLATE INSTITUTE (TPI) REQUIREMENTS.
2. TRUSSES SHALL BE DESIGNED SO THAT THE TOTAL DEFLECTION UNDER COMBINED DEAD AND LIVE LOADS WILL NOT EXCEED L/360 (WHERE L = LENGTH OF SPAN), NOR SHALL THE LIVE LOAD DEFLECTION EXCEED L/240.
3. ROOF TRUSSES ARE TO BE DESIGNED BY THE TRUSS MANUFACTURER TO MEET OR EXCEED THE FOLLOWING LOAD CONDITIONS IN ADDITION TO ALL GOVERNING BUILDING CODES, COMPLETE WITH ALL NECESSARY TEMPORARY OR PERMANENT BRACING, ATTACHMENTS, BRIDGING, ETC, AS MAY BE REQUIRED FOR A COMPLETE ROOF SYSTEM.
   TOP CHORD LIVE LOAD.....20.0 PSF
   TOP CHORD DEAD LOAD (SUPERIMPOSED).....10.0 PSF
   BOTTOM CHORD LIVE LOAD.....10.0 PSF
   BOTTOM CHORD DEAD LOAD (SUPERIMPOSED).....15.0 PSF
   TOTAL = 55.0 PSF
4. DESIGN IS TO BE BASED ON FRAMING LAYOUT, DIMENSIONS AND LOAD SHOWN. DEVIATION FROM THIS MUST BE COORDINATED WITH THE PROJECT ARCHITECT AND ENGINEER.
5. TRUSS MANUFACTURER TO MAINTAIN NUMBER OF TRUSS PLIES INDICATED ON DRAWINGS- INCREASE CHORD/WEB MEMBERS TO ACCOMPLISH THIS. ST HE
6. TRUSS MANUFACTURER SHALL PROVIDE CALCULATIONS SIGNED AND SEALED BY AN ENGINEER LICENSED IN THE STATE OF FLORIDA DEMONSTRAITNG THE STRENGTH AND SERVICEABILITY OF THE ROOFING SYSTEM. THESE CALCULATIONS SHALL ALSO SPECIFICALLY IDENTIFY UPLIFT AND SHEAR FORCES AND CONNECTIONS SELECTED TO RESIST THESE FORCES. BOTTOM CHORD BRACING SHALL BE IN COMPLIANCE WITH TPI RECOMMENDATIONS AND DESIGNED TO PROVIDE ADEQUATE
7. THE ARCHITECT/ENGINEER HAS NOT REVIEWED THE PRE-ENGINEERED TRUSS MANUFACTURER'S LAYOUT TO DETERMINE ANY LOAD CONDITIONS AND RESERVES THE RIGHT TO MAKE ANY CHANGES AFTER TRUSS LOAD INFORMATION IS SUPPLIED TO THE ARCHITECT/ENGINEER.

8. SIMPSON STRONG-TIE CONNECTORS

SIMPSON MODEL NO.	DESCRIPTION	SUPPORTING MEMBER	SUPPORTED MEMBER	FLORIDA PRODUCT APPROVAL NO.
HETAL12	EMBEDDED TRUSS ANCHOR	-	(10) 10d x 1-1/2	11473.5
HETAL16	EMBEDDED TRUSS ANCHOR	-	(10) 10d x 1-1/2	11473.5
MGT	GIRDER TRUSS HOLD DOWN	(1) 5/8" TO CMU	(22) 10d TO GIRDER	11470.7
LU24	FACE MOUNT MOUNT	(4) 10d	(2) 10d x 1-1/2	10655.103
H2.5A	HURRICANE TIE	(5) 8d	(5) 8d	10456.12
HGT-2	GIRDER TRUSS HOLD DOWN	(2) 5/8"	(16) 10d	10456.18
H14	HURRICANE STRAP	(12) 8dx1-1/2"	(15) 8d	11478.2
LGUM210-2-SDS	GIRDER TRUSS HOLD DOWN	(8) 3/8"x4"	(8) 1/4"X2-1/2"	11473.12

LIST OF ABRREVIATIONS

@	AT	(L)	LONG
ABUT.	ABUTMENT	LAT.	LATERAL
A.F.F.	ABOVE FINISH FLOOR	L.H.	LEFT HAND
AB.	ANCHOR BOLT	LG.	LIGHT GAUGE
ARCH.	ARCHITECTURAL/ ARCHITECTS(DRAWINGS)	L.W.	LONG WAY
L.	ANGLE	LIN. FT.	LINEAR FOOT
L'S	ANGLES	LLO	LONG LEG OUT
B.	BOTTOM	LLV	LONG LEG VERTICAL
B/	BOTTOM OF	LONG.	LONGITUDINAL
B.B.	BOTTOM BAR	MAT'L.	MATERIAL
B.J.	BAR JOIST	MAX.	MAXIMUM
BCK.	BACK	MECH.	MECHANICAL
℄	BASELINE	MIN.	MINIMUM
BRIDG.	BRIDGING	MSL	MEAN SEA LEVEL
BRNG.	BEARING	MPH	MILES PER HOUR
BOT.	BOTTOM	NO.	NUMBER
BLDG.	BUILDING	N.S.	NON-SHRINK
℄	CENTERLINE	O.C.	ON CENTER
C. TO C.	CENTER TO CENTER	O.C.E.W.	ON CENTER EACH WAY
C.I.P.	CAST IN PLACE	OPNG.	OPENING
CLR.	CLEAR	O.H.	OPPOSITE HAND
C.M.U.	CONCRETE MASONRY UNIT	O.D.	OUTSIDE DIAMETER
COL.	COLUMN	O.F.P.	OUTSIDE FACE OF PANEL
CONC.	CONCRETE	PAVT.	PAVEMENT
CONT.	CONTINUOUS	PL	PLATE
CONST.	CONSTRUCTION	PT.	POINT
C.J.	CONSTRUCTION JOINT	P.T.	PRESSURE TREATED
CU. FT.	CUBIC FOOT	PSF	POUND PER SQUARE FOOT
CU. IN.	CUBIC INCH	PSI	POUNDS PER SQUARE INCH
CU. YD.	CUBIC YARD	P.G.	PROFILE GRADE
DET.	DETAIL	PROP.	PROPOSED
DIA.	DIAMETER	RAD.	RADIUS
ø	DIAMETER STRUC. STL.	REINF.	REINFORCING
DWG.	DRAWING	REQ.	REQUIRE
DWGS.	DRAWINGS	REQ'D.	REQUIRED
EA.	EACH	REQMTS.	REQUIREMENTS
EL.	ELEVATION	R.H.	RIGHT HAND
ELEV.	ELEVATION	(S)	SHORT
EQ.	EQUALLY/EQUAL	SECT	SECTION
E.W.	EACH WAY	SIM.	SIMILAR
EXP.	EXPANSION	SPL.	SPLICE
EXIST.	EXISTING	SP.	SPACE OR SPACING
EXT.	EXTERIOR	S.F.	SQUARE FOOT
F.B.	FIELD BEND	S.W.	SHORT WAY
FIN. FLR.	FINISH FLOOR	S.Y.	SQUARE YARD
F.F.	FINISH FLOOR	STD.	STANDARD
FLR.	FLOOR	STA.	STATION
FLNG.	FLANGE	STL.	STEEL
FT.	FOOT	STFNR.	STIFFENER
FTG.	FOOTING	STRUC.	STRUCTURAL
FND.	FOUNDATION	SYM.	SYMMETRICAL
FRMG.	FRAMING	T.	TOP
GALV.	GALVANIZED	T/	TOP OF
GA.	GAGE	T.B.	TOP BAR
G/B	GIRDER BEARING	T & B	TOP AND BOTTOM
H.S.	HIGH STRENGTH	T/J	TOP OF BAR JOIST
HK.	HOOK	T/P	TOP OF PANEL
HORI

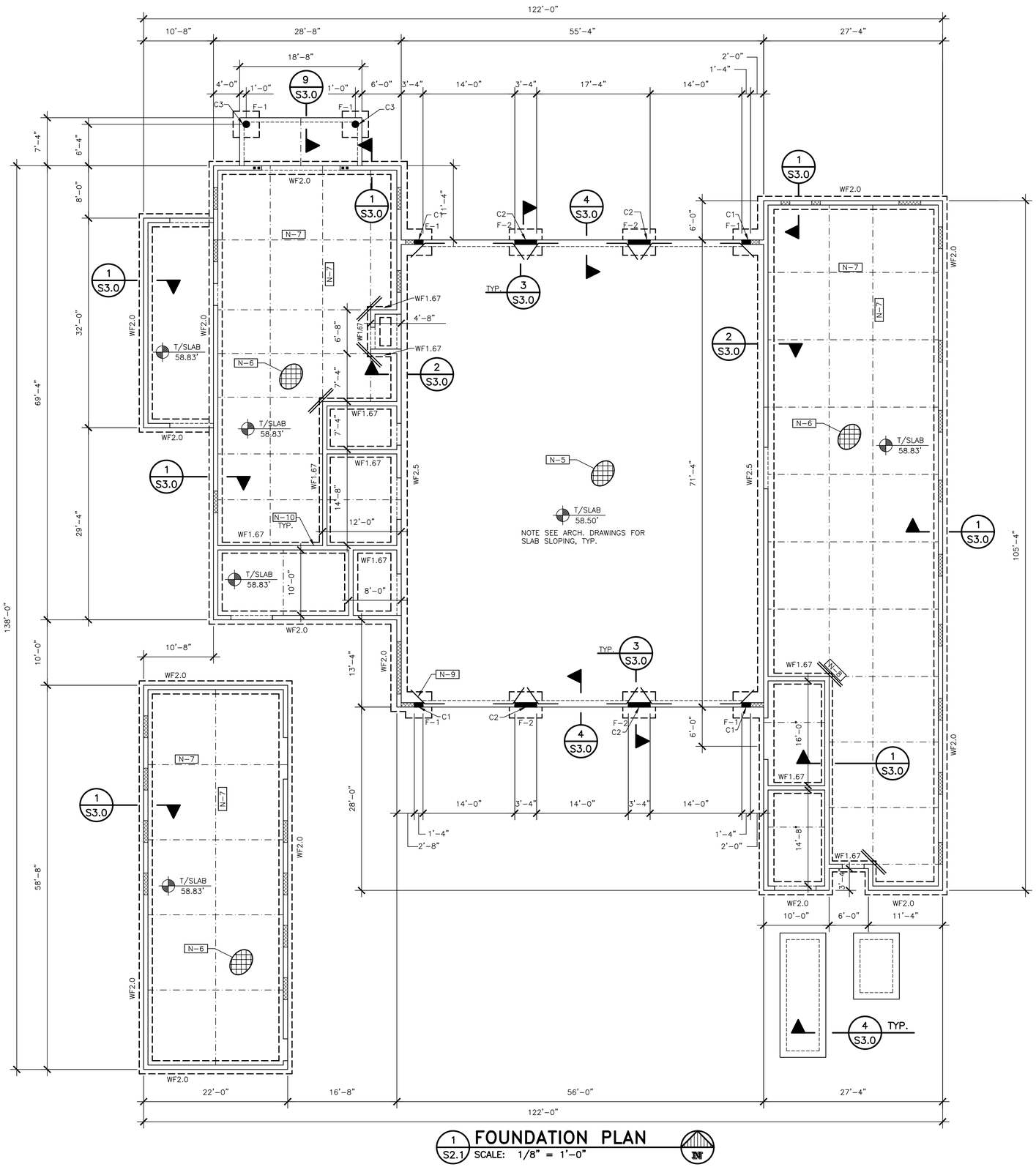

1 S2.1 **FOUNDATION PLAN**
SCALE: 1/8" = 1'-0"

FOUNDATION NOTES

- N-1 FOR GENERAL STRUCTURAL NOTES SEE DRAWINGS S1.0.
- N-2 FOR PLAN DIMENSIONS NOT SHOWN, REFER TO ARCH. DRAWINGS. VERIFY ALL DIMENSIONS WITH ARCH. DRAWINGS.
- N-3 SEE PLAN FOR FINISH FLOOR ELEVATIONS, VERIFY ELEVATIONS WITH CIVIL DRAWINGS.
- N-4 VERIFY TOP OF FOOTINGS WITH PLANS AND SECTIONS.
- N-5 8" CONCRETE SLAB-ON-GRADE WITH #4 @ 12" O.C. E.W. T. & B. ON WELL COMPACTED SOIL. SEE ARCHITECTURAL DRAWINGS FOR VAPOR BARRIER AND SOIL TREATMENT REQUIREMENTS.
- N-6 4" CONCRETE SLAB-ON-GRADE WITH W.W.R. 6 X 6 - W1.4 X W1.4 ON WELL COMPACTED SOIL. SEE ARCHITECTURAL DRAWINGS FOR VAPOR BARRIER, SOIL TREATMENT REQUIREMENTS, AND SLAB STEPS AND SLOPES.
- N-7 SLAB-ON-GRADE CONTROL JOINT. SEE DETAIL 4/S3.1
- N-8 2-#4 X 5'-0 LG. AT MID-DEPTH OF SLAB, TYPICAL AT RE-ENTRANT CORNERS. TYP.
- N-9 1-#5 X 3'-0 X 3'-0 TOP BAR TYPICAL WHERE SHOWN.
- N-10 AT TOP OF INTERIOR NON-LOADBEARING CMU WALLS, PROVIDE 8" KNOCK-OUT BLOCK BOND BEAM WITH 1-#5 CONTINUOUS AND CORNER BARS, TYP.
- N-11 CMU WALL BELOW GRADE SHALL BE FULLY GROUTED

FOUNDATION LEGEND

- CX — INDICATES CAST-IN-PLACE CONCRETE COLUMN (SHEARWALL) SEE DETAIL 7/S3.1 FOR SIZE AND REINFORCEMENT.
- ■ INDICATES #5 BAR IN A FULLY GROUTED CELL WITH STANDARD HOOK IN FOOTING AND BOND BEAM (4'-0" MAXIMUM SPACING)
- INDICATES WINDOW OPENING ABOVE, REFERENCE ARCH. DRAWINGS FOR SIZE AND LOCATION.

FOOTING SCHEDULE

MARK	LENGTH	WIDTH	DEPTH	REINFORCEMENT	COMMENTS
WF1.67	CONT.	1'-8"	1'-0"	2-#5 BARS EQ. SPACED BOTTOM LONG. AND #5 BARS AT 14" O.C. TRANS.	-
WF2.0	CONT.	2'-0"	1'-0"	3-#5 BARS EQ. SPACED BOTTOM LONG. AND #5 BARS AT 14" O.C. TRANS.	-
WF2.5	CONT.	2'-6"	1'-0"	4-#5 BARS EQ. SPACED BOTTOM LONG. AND #5 BARS AT 14" O.C. TRANS.	-
F-1	4'-0"	4'-0"	1'-0"	4-#5 BARS EQ. SPACED EACH WAY TOP AND BOTTOM	-
F-2	5'-0"	4'-0"	1'-0"	5-#5 BARS SHORT WAY TOP AND BOTTOM 4-#5 BARS LONG WAY TOP AND BOTTOM	-
-	-	-	-	-	-

CITY OF TAMPA
CONTRACT ADMINISTRATION DEPARTMENT
PLANNING AND DESIGN DIVISION
306 E. JACKSON STREET 4 NORTH
TAMPA, FLORIDA 33602
p: 813. 274. 8456 - f: 813. 274. 8080
url: www.tampagov.net

James E. Jackson, Jr. AIA, NOMA
City Architect
Edward D. Rice, AIA
Project Architect
Kevin L. Henika, AIA
Project Architect
Thomas A. Hester, Sr., AIA, NOMA
Project Architect
Kinsey C. Tilman
Drafting Technician
Jerry P. Sanders
Drafting Technician
Byron K. Thomas, LEED AP
Drafting Technician

MEP CONSULTANT
GRINER ENGINEERING, INC.
1628 1st. AVENUE NORTH
ST. PETERSBURG, FL 33713

STRUCTURAL CONSULTANT
BILLER REINHART
ENGINEERING GROUP, INC.
3434 COLWELL AVENUE, SUITE 100
TAMPA, FL 33614

CIVIL CONSULTANT
B M CIVIL LLC
12315 WYCLIFF PLACE
TAMPA, FL 33626

LANDSCAPE CONSULTANT
DAVID CONNER & ASSOCIATES
1508 W. SWANN AVENUE,SUITE 255
TAMPA, FL 33606

FIRE STATION 23

20770 TROUT CREEK DR
TAMPA, FLORIDA

DPW FILE NUMBER

DPW NUMBER
FD0116

ISSUE DATE
7-28-17

DRAWN BY
RC, RM

REVISIONS

SEAL
TO THE BEST OF THE ENGINEER'S KNOWLEDGE, THE PLANS AND SPECIFICATIONS COMPLY WITH THE APPLICABLE MINIMUM BUILDING CODES

ROBERT J. REINHART
FL. P.E. NO. 50076

SCALE: VARIES

FOUNDATION PLAN

SHEET NUMBER
S2.0
X OF X

billerreinhart ENGINEERING GROUP INC.
3434 colwell avenue suite 100, tampa, florida 33614
telephone : 813.908.7203 fax : 813.931.5200
email : info@billerreinhart.com
State of Florida Certificate of Authorization No. 9149

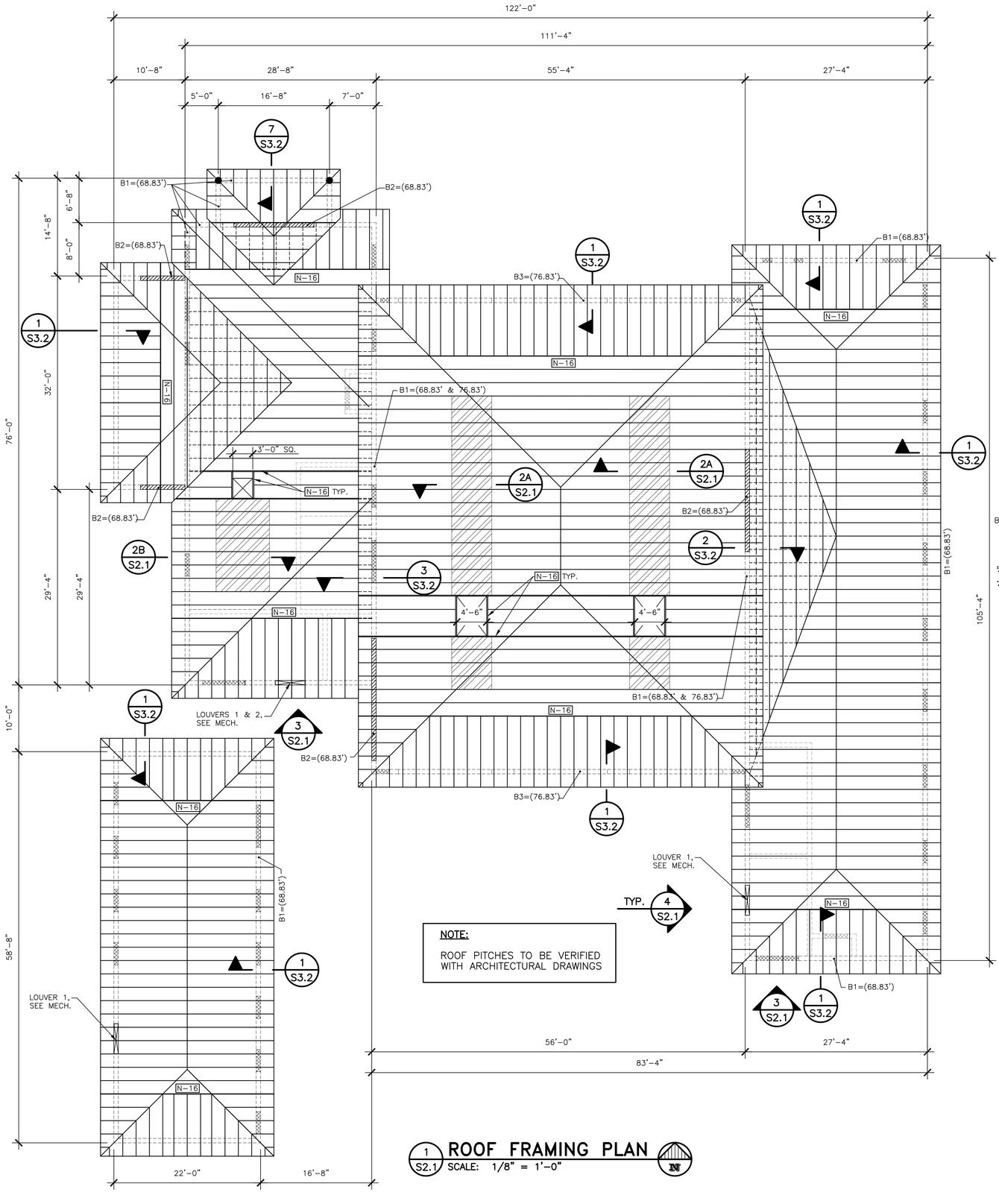

1 S2.1 ROOF FRAMING PLAN
SCALE: 1/8" = 1'-0"

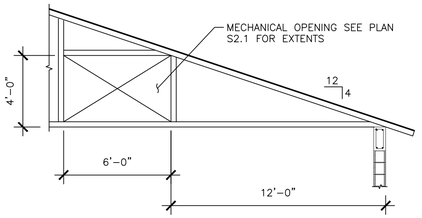

2A

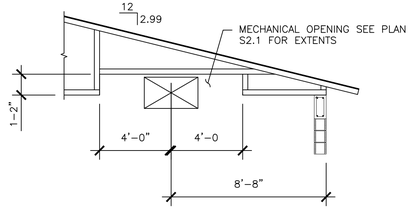

2B

2 S2.1 MODIFIED TRUSS DETAIL
SCALE: 1/4" = 1'-0"

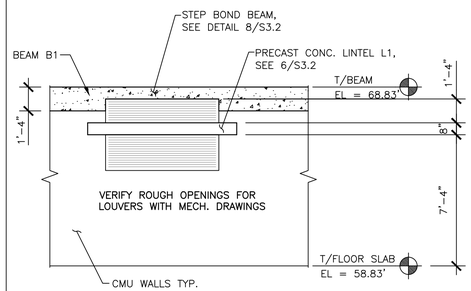

3 S2.1 ELEVATION
SCALE: 1/4" = 1'-0"

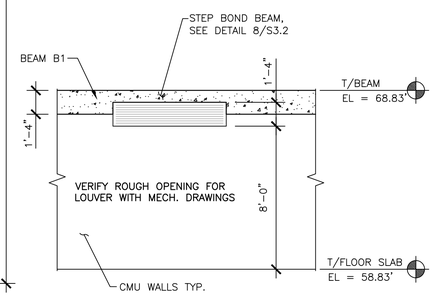

4 S2.1 ELEVATION
SCALE: 1/4" = 1'-0"

ROOF FRAMING NOTES

N-1 FOR GENERAL STRUCTURAL NOTES SEE DRAWINGS S1.0.

N-2 FOR PLAN DIMENSIONS NOT SHOWN, REFER TO ARCHITECTURAL DRAWINGS. VERIFY ALL DIMENSIONS WITH ARCH. DRAWINGS.

N-3 SEE PLAN FOR FINISH FLOOR ELEVATIONS, VERIFY ELEVATIONS WITH CIVIL DRAWINGS.

N-4 ANY MODIFICATION TO THE TRUSS LAYOUT SHOWN ON THIS PLAN SHALL BE REVIEWED BY THE ENGINEER. SUCH MODIFICATIONS MAY ADVERSELY AFFECT THE STRUCTURAL DESIGN OF BEAMS, COLUMNS, FOUNDATIONS, AND CMU WALLS.

N-5 PRE-ENGINEERED TRUSSES SHALL BE DESIGNED SO AS TO NOT EXERT ANY HORIZONTAL THRUST FORCES ON SUPPORTING WALLS AND BEAMS.

N-6 TRUSS LAYOUT PLAN IS DIAGRAMMATIC IN NATURE AND IS PROVIDED FOR ILLUSTRATION PURPOSES ONLY. TRUSS MANUFACTURER SHALL PROVIDE SEPARATE LAYOUT AND TRUSS DESIGN AND CALCULATIONS SIGNED AND SEALED BY FLORIDA REGISTERED PROFESSIONAL ENGINEER.

N-7 PRE-ENGINEERED WOOD TRUSSES SHALL BE PLACED AT 2'-0" UNLESS NOTED OTHERWISE.

N-8 INSTALL FASTENERS PER MANUFACTURER'S SPECIFICATIONS AND DO NOT DRIVE NAILS THOUGH THE TRUSS PLATE ON THE OPPOSITE SIDE OF THE TRUSS WHICH COULD FORCE THE PLATE OFF THE TRUSS.

N-9 ROOF SHEATHING: SHALL BE 24/16 $\frac{15}{32}$" APA RATED EXTERIOR EXPOSURE 1. NAILS SHALL BE 10d WITH A MINIMUM PENETRATION (IN FRAMING) OF $1\frac{1}{8}$", MINIMUM NOMINAL WIDTH OF FRAMING MEMBERS SHALL BE 2" (ONE LINE OF FASTENERS REQUIRED). SHEATHING SHALL BE PLACED OVER A MINIMUM OF 2 SPANS WITH THE LONG DIMENSION PERPENDICULAR TO THE MAIN ROOF FRAMING MEMBERS. NAIL SPACING SHALL BE 6" AT BOUNDARIES AND CONTINUOUS PANEL EDGES, UNLESS OTHERWISE NOTED. NAIL SPACING SHALL BE 6" AT INTERMEDIATE SUPPORTS, UNLESS NOTED OTHERWISE.

N-10 THE ENGINEER HAS NOT REVIEWED THE PRE-ENGINEERED TRUSS MANUFACTURER'S LAYOUT TO DETERMINE ANY LOAD BEARING CONDITIONS AND RESERVES THE RIGHT TO MAKE ANY CHANGES AFTER TRUSS LOAD INFORMATION IS SUPPLIED TO THE ENGINEER.

N-11 THE FINAL TRUSS ENGINEERING AND LAYOUT SHALL BE SUBMITTED TO ENGINEER OF RECORD FOR REVIEW PRIOR TO TRUSS MANUFACTURING.

N-12 PROVIDE BENT BARS OF THE SAME NUMBER AND SIZE AS STRAIGHT BARS AT CORNERS AND INTERSECTIONS OF BOND BEAM TYP.

N-13 TRUSS BRACING SEE DETAIL 4/S3.2.

N-14 CROSS BRACING AT 20'-0" MAX, SEE DETAIL 5/S3.2.

N-15 ROOF OVERHANGS TO BE VERIFIED WITH ARCHITECTURAL DRAWINGS.

N-16 MULTI-PLY GIRDER TRUSS AS REQUIRED BY TRUSS MANUFACTURER. TRUSS TO TRUSS CONNECTION PROVIDED BY TRUSS MANUFACTURER.

N-17 TRUSS TO STRUCTURE HOLD DOWN STRAPS SUBJECT TO CHANGE, DEPENDANT UPON COMPLETION OF TRUSS MANUFACTURER'S CALCULATIONS AND REQUIREMENTS.

ROOF FRAMING LEGEND

INDICATES OPENING WITH L1 LINTEL TYPICAL U.N.O. SEE 6/S3.2 FOR LINTEL SCHEDULE AND VERIFY OPENING WITH ARCHITECTURAL DRAWINGS.

BX=(X') INDICATES CONCRETE BEAM AND TOP OF BEAM ELEVATION. SEE BEAM SCHEDULE.

INDICATES CONCRETE BEAM ABOVE OPENING, BEAM TO SPAN 8" BEYOND OPENING ON EACH SIDE.

INDICATES MODIFIED TRUSS TO ACCOMMODATE MECHANICAL EQUIPMENT. SEE 2/S2.1

BEAM SCHEDULE

MARK	WIDTH	DEPTH	REINFORCEMENT
B1	8"	16"	2-#5 BARS TOP AND BOTTOM W/#3 STIRRUPS AT 12" O.C.
B2	8"	24"	2-#5 BARS TOP AND BOTTOM AND MIDDLE W/#3 STIRRUPS AT 10" O.C.
B3	8"	32"	2-#5 BARS TOP AND BOTTOM AND 2-#5 EACH FACE MIDDLE W/#3 STIRRUPS AT 12" O.C.
–	–	–	–

CITY OF TAMPA
CONTRACT ADMINISTRATION DEPARTMENT
PLANNING AND DESIGN DIVISION
306 E. JACKSON STREET 4 NORTH
TAMPA, FLORIDA 33602
p: 813. 274. 8456 – f: 813. 274. 8080
url: www.tampagov.net

James E. Jackson, Jr. AIA, NOMA
City Architect
Edward D. Rice, AIA
Project Architect
Kevin L. Henika, AIA
Project Architect
Thomas A. Hester, Sr., AIA, NOMA
Project Architect
Kinsey C. Tilman
Drafting Technician
Jerry P. Sanders
Drafting Technician
Byron K. Thomas, LEED AP
Drafting Technician

MEP CONSULTANT
GRINER ENGINEERING, INC.
1628 1st. AVENUE NORTH
ST. PETERSBURG, FL 33713

STRUCTURAL CONSULTANT
BILLER REINHART
ENGINEERING GROUP, INC.
3434 COLWELL AVENUE, SUITE 100
TAMPA, FL 33614

CIVIL CONSULTANT
B M CIVIL LLC
12315 WYCLIFF PLACE
TAMPA, FL 33626

LANDSCAPE CONSULTANT
DAVID CONNER & ASSOCIATES
1508 W. SWANN AVENUE,SUITE 255
TAMPA, FL 33606

FIRE STATION 23

20070 TROUT CREEK DR
TAMPA, FLORIDA

DPW FILE NUMBER

DPW NUMBER
FD0116

ISSUE DATE
7-28-17

DRAWN BY
RC, RM

REVISIONS

SEAL
TO THE BEST OF THE ENGINEER'S KNOWLEDGE, THE PLANS AND SPECIFICATIONS COMPLY WITH THE APPLICABLE MINIMUM BUILDING CODES

ROBERT J. REINHART
FL. P.E. NO. 50076

SCALE: VARIES

ROOF FRAMING PLAN

SHEET NUMBER
S2.1
X OF X

billerreinhart
ENGINEERING GROUP INC.
3434 colwell avenue suite 100, tampa, florida 33614
telephone : 813.908.7203 fax : 813.931.5200
email : info@billerreinhart.com
State of Florida Certificate of Authorization No. 9149

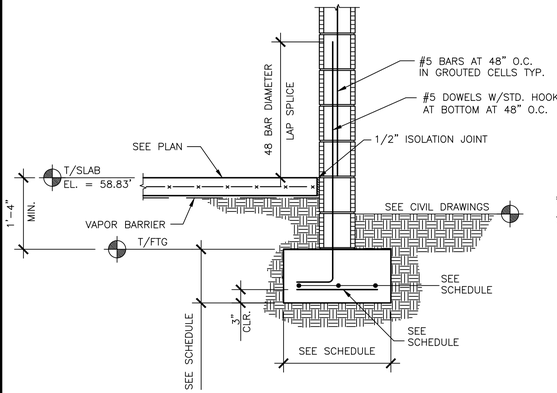

1 S3.0 TYPICAL FOOTING DETAIL
SCALE: 3/4" = 1'-0"

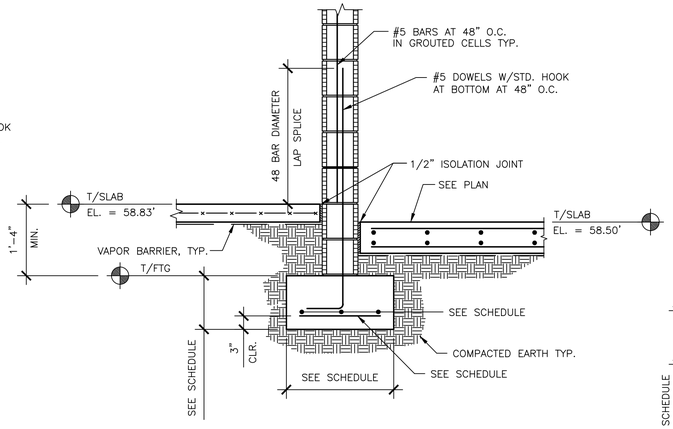

2 S3.0 FOOTING DETAIL
SCALE: 3/4" = 1'-0"

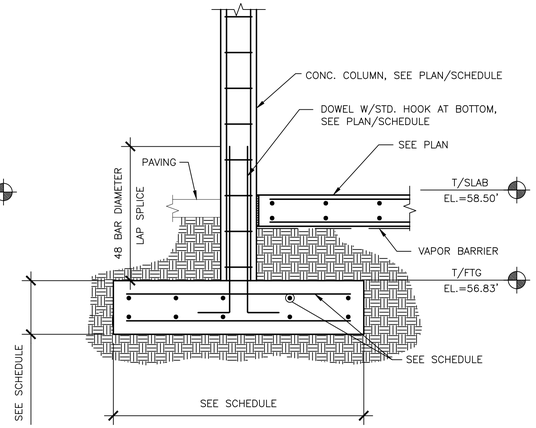

3 S3.0 SECTION
SCALE: 3/4" = 1'-0"

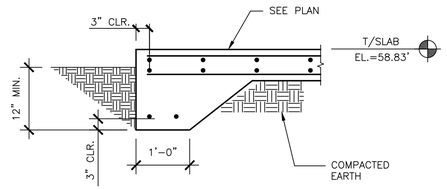

4 S3.0 THICKENED SLAB EDGE
SCALE: 3/4" = 1'-0"

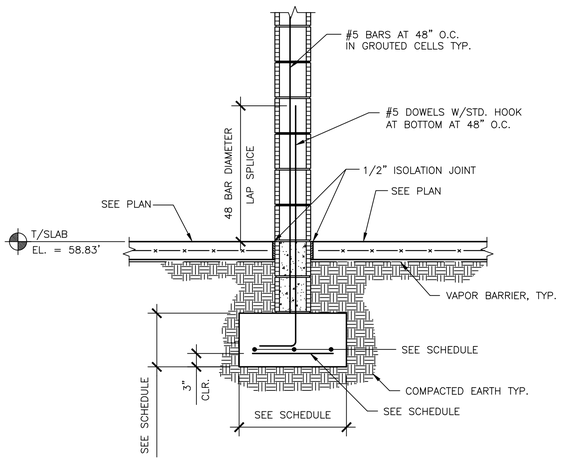

5 S3.0 INTERIOR NON-LOAD BEARING WALL FOOTING DETAIL
SCALE: 3/4" = 1'-0"

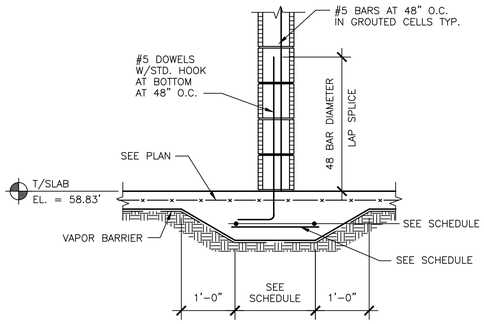

6 S3.0 ALTERNATE INTERIOR NON-LOAD BEARING WALL FOOTING DETAIL
SCALE: 3/4" = 1'-0"

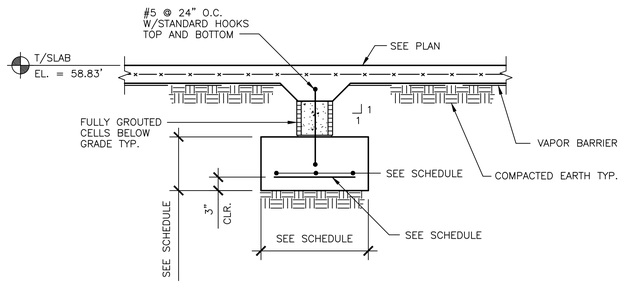

7 S3.0 FOOTING DETAIL @ DOOR OPENING
SCALE: 3/4" = 1'-0"

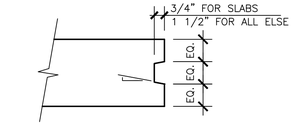

PROVIDE A KEYED JOINT WHERE A CONTINUOUS CONCRETE ELEMENT IS CONSTRUCTED IN PARTS. USE THIS DETAIL FOR A CONSTRUCTION JOINT WHERE REQUIRED, UNLESS NOTED OTHERWISE. EXTEND REINFORCEMENT THE MINIMUM LAP DIMENSION INTO THE NEW CONCRETE POUR.

8 S3.0 KEY JOINT
SCALE: 3/4" = 1'-0"

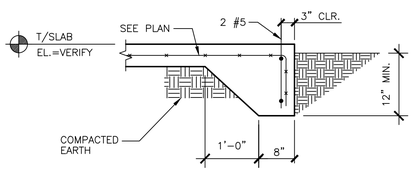

9 S3.0 THICKENED SLAB EDGE
SCALE: 3/4" = 1'-0"

billerreinhart
ENGINEERING GROUP INC.
3434 colwell avenue suite 100, tampa, florida 33614
telephone : 813.908.7203 fax : 813.931.5200
email : info@billerreinhart.com
State of Florida Certificate of Authorization No. 9149

CITY OF TAMPA
CONTRACT ADMINISTRATION
DEPARTMENT
PLANNING AND DESIGN DIVISION
306 E. JACKSON STREET 4 NORTH
TAMPA, FLORIDA 33602
p: 813. 274. 8456 - f: 813. 274. 8080
url: www.tampagov.net

James E. Jackson, Jr. AIA, NOMA
City Architect
Edward D. Rice, AIA
Project Architect
Kevin L. Henika, AIA
Project Architect
Thomas A. Hester, Sr., AIA, NOMA
Project Architect
Kinsey C. Tilman
Drafting Technician
Jerry P. Sanders
Drafting Technician
Byron K. Thomas, LEED AP
Drafting Technician

MEP CONSULTANT
GRINER ENGINEERING, INC.
1628 1st. AVENUE NORTH
ST. PETERSBURG, FL 33713

STRUCTURAL CONSULTANT
BILLER REINHART
ENGINEERING GROUP, INC.
3434 COLWELL AVENUE, SUITE 100
TAMPA, FL 33614

CIVIL CONSULTANT
5 M CIVIL LLC
12315 WYCLIFF PLACE
TAMPA, FL 33626

LANDSCAPE CONSULTANT
DAVID CONNER & ASSOCIATES
1508 W. SWANN AVENUE,SUITE 255
TAMPA, FL 33606

FIRE STATION 23

20770 TROUT CREEK DR
TAMPA, FLORIDA

DPW FILE NUMBER

DPW NUMBER
FD0116

ISSUE DATE
7-28-17

DRAWN BY
RC, RM

REVISIONS

SEAL
TO THE BEST OF THE ENGINEER'S KNOWLEDGE, THE PLANS AND SPECIFICATIONS COMPLY WITH THE APPLICABLE MINIMUM BUILDING CODES

ROBERT J. REINHART
FL. P.E. NO. 50076

SCALE: VARIES

SECTION & DETAILS

SHEET NUMBER
S3.0
X OF X

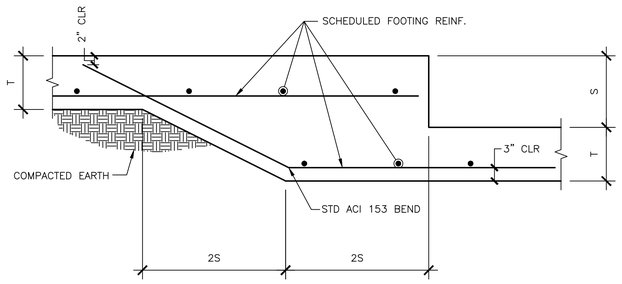

S = STEP DIMENSION (0'-8" MIN., 1'-4" MAX.)
T = FOOTING THICKNESS SEE SCHEDULE

1 S3.1 STEP FOOTING DETAIL
SCALE: 3/4" = 1'-0"

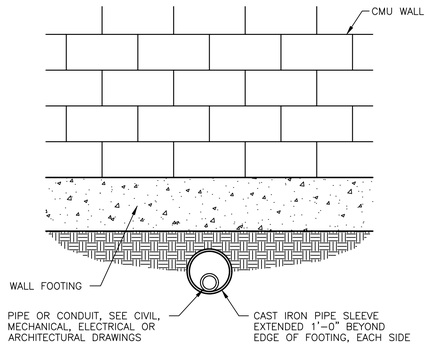

CONTRACTOR SHALL USE THIS DETAIL WHERE PIPE OR CONDUIT MUST PASS BELOW A WALL FOOTING.

2 S3.1 PIPE UNDER FOOTING DETAIL
SCALE: 3/4" = 1'-0"

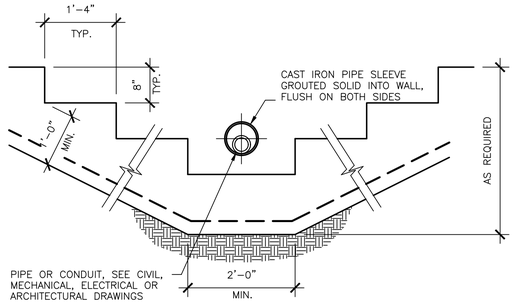

CONTRACTOR SHALL USE THIS DETAIL TO STEP FOOTINGS AS REQUIRED TO RESOLVE UNFORSEEN CONFLICTS WITH UNDERGROUND PIPES OR CONDUITS

3 S3.1 PIPE CONFLICT AT FOOTING DETAIL
SCALE: 3/4" = 1'-0"

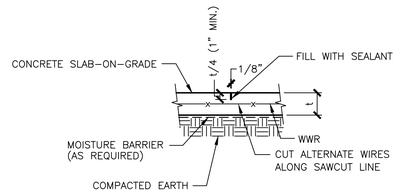

NOTE : MAKE CONTRACTION JOINTS IN SLABS ON GRADE BY SAWING A CONTINUOUS CUT IN THE TOP OF SLAB.

MAXIMUM SPACING OF CONTRACTION JOINTS IN FEET			
SLAB THICKNESS, INCHES	MAXIMUM-SIZE AGGREGATE LESS THAN 3/4 INCHES	MAXIMUM-SIZE AGGREGATE 3/4 INCHES AND LARGER	SLUMP LESS THAN 4 INCHES *
4	8	10	12
5	10	13	15
–	–	–	–

* 3/4 INCHES AND LARGER MAXIMUM SIZE AGGREGATE

4 S3.1 CONTRACTION JOINT DETAIL
SCALE: 1/4" = 1'-0"

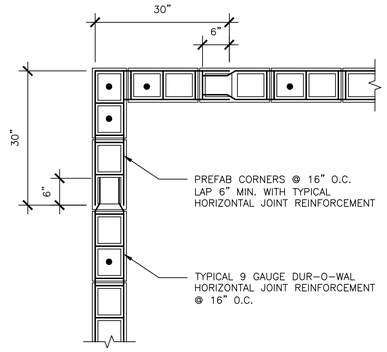

5 S3.1 TYP. CORNER REINFORCING DETAIL
SCALE: 3/4" = 1'-0"

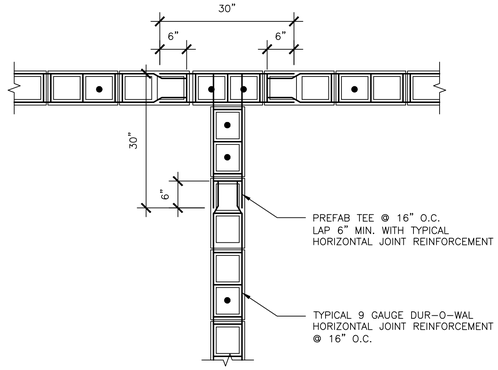

6 S3.1 TYP. INTERSECTION REINFORCING DETAIL
SCALE: 3/4" = 1'-0"

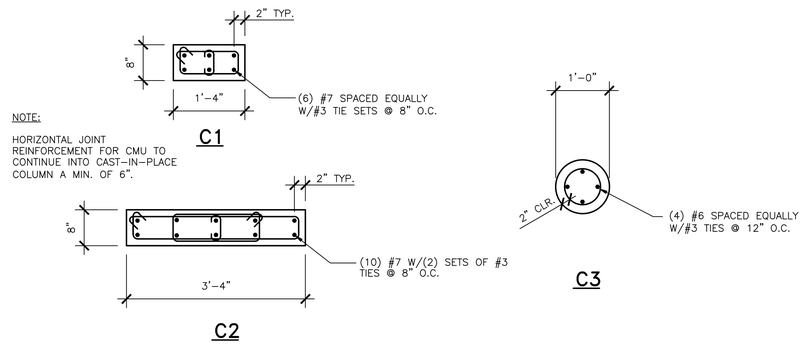

7 S3.1 CONCRETE COLUMN DETAILS
SCALE: 3/4" = 1'-0"

billerreinhart ENGINEERING GROUP INC.
3434 colwell avenue suite 100, tampa, florida 33614
telephone : 813.908.7203 fax : 813.931.5200
email : info@billerreinhart.com
State of Florida Certificate of Authorization No. 9149

CITY OF TAMPA
CONTRACT ADMINISTRATION DEPARTMENT
PLANNING AND DESIGN DIVISION
306 E. JACKSON STREET 4 NORTH
TAMPA, FLORIDA 33602
p: 813. 274. 8456 – f: 813. 274. 8080
url: www.tampagov.net

James E. Jackson, Jr. AIA, NOMA
City Architect
Edward D. Rice, AIA
Project Architect
Kevin L. Henika, AIA
Project Architect
Thomas A. Hester, Sr., AIA, NOMA
Project Architect
Kinsey C. Tilman
Drafting Technician
Jerry P. Sanders
Drafting Technician
Byron K. Thomas, LEED AP
Drafting Technician

MEP CONSULTANT
GRINER ENGINEERING, INC.
1628 1st. AVENUE NORTH
ST. PETERSBURG, FL 33713

STRUCTURAL CONSULTANT
BILLER REINHART ENGINEERING GROUP, INC.
3434 COLWELL AVENUE, SUITE 100
TAMPA, FL 33614

CIVIL CONSULTANT
B M CIVIL LLC
12315 WYCLIFF PLACE
TAMPA, FL 33626

LANDSCAPE CONSULTANT
DAVID CONNER & ASSOCIATES
1509 W. SWANN AVENUE,SUITE 255
TAMPA, FL 33606

FIRE STATION 23

20770 TROUT CREEK DR
TAMPA, FLORIDA

DPW FILE NUMBER

DPW NUMBER
FD0116

ISSUE DATE
7-28-17

DRAWN BY
RC, RM

REVISIONS

SEAL
TO THE BEST OF THE ENGINEER'S KNOWLEDGE, THE PLANS AND SPECIFICATIONS COMPLY WITH THE APPLICABLE MINIMUM BUILDING CODES

ROBERT J. REINHART
FL. P.E. NO. 50076

SCALE: VARIES

SECTION & DETAILS

SHEET NUMBER
S3.1
X OF X

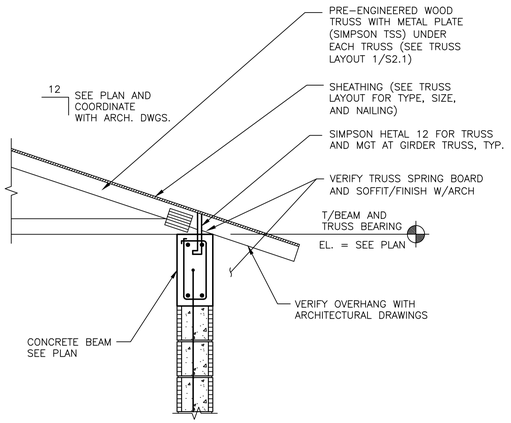

1 S3.2 WALL SECTION
SCALE: 3/4" = 1'-0"

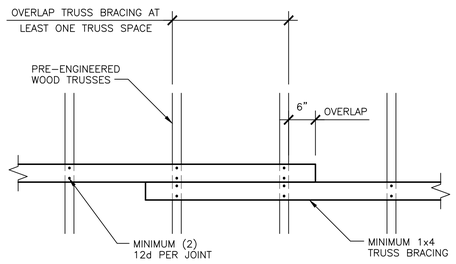

4 S3.2 TRUSS BRACING OVERLAP DETAIL
SCALE: 3/4" = 1'-0"

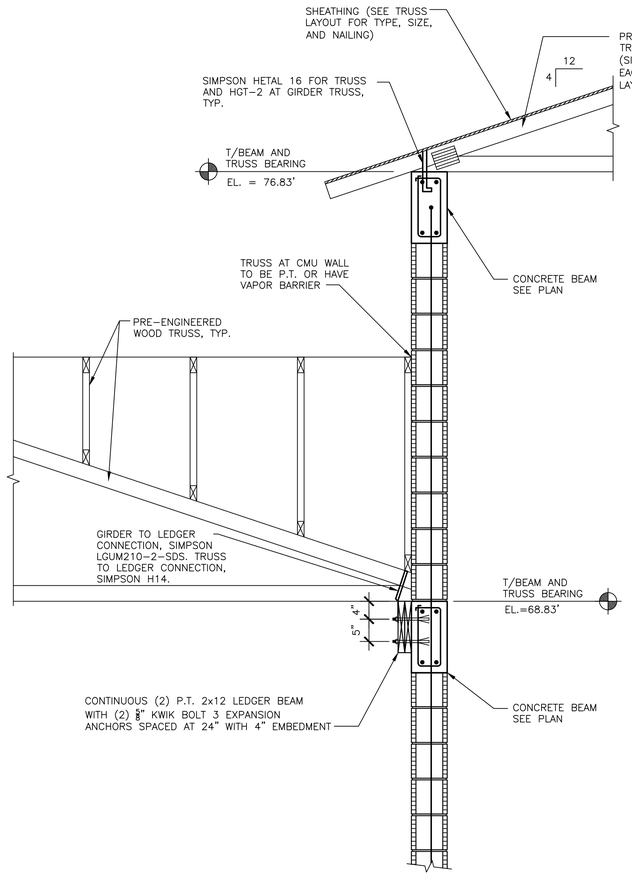

2 S3.2 WALL SECTION
SCALE: 3/4" = 1'-0"

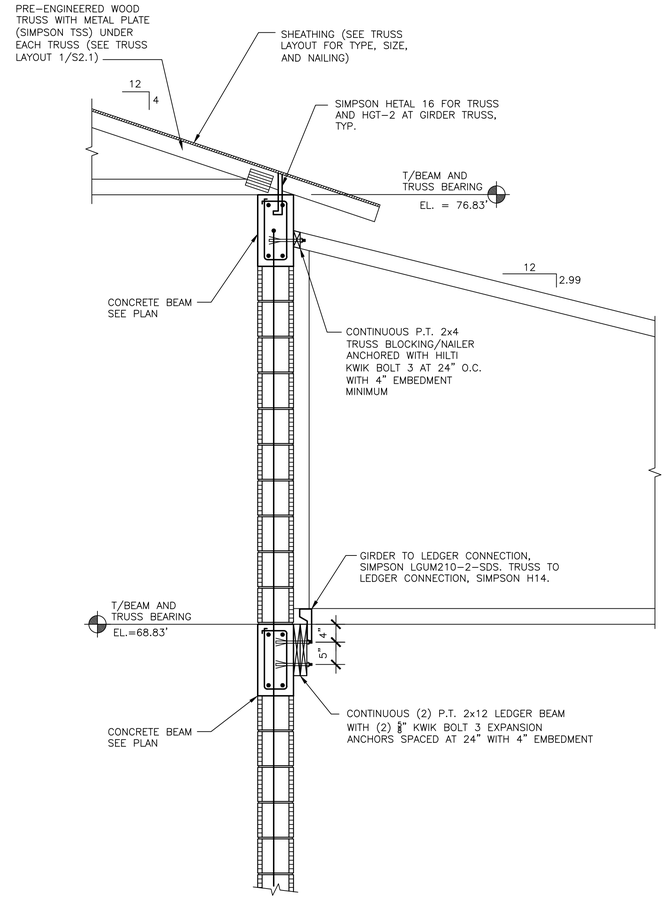

3 S3.2 WALL SECTION
SCALE: 3/4" = 1'-0"

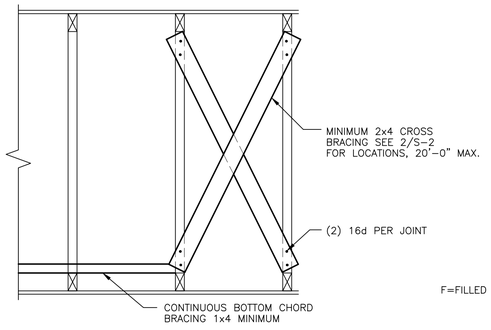

5 S3.2 CROSS BRACING DETAIL
SCALE: 3/4" = 1'-0"

PRECAST LINTEL SCHEDULE

PROVIDE CAST CRETE PRECAST LINTELS FOR OPENINGS IN MASONRY AS INDICATED IN TABLE BELOW. FLORIDA BUILDING COMMISSION PRODUCT APPROVAL #FL 158

MARK	MINIMUM BEARING	LINTEL TYPE	NOTES
L1	4"	8F8-1B	SEE PLAN
-	-		-

NOMINAL HEIGHT — QUANTITY OF #5 BAR AT BOTTOM OF CAVITY
NOMINAL WIDTH — 8 F 16 - 1B / 1T — QUANTITY OF #5 BAR AT TOP
F=FILLED WITH GROUT/U=FILLED

LINTEL TYPE DESIGNATION

6 S3.2 PRECAST LINTEL SCHEDULE
SCALE: N.T.S.

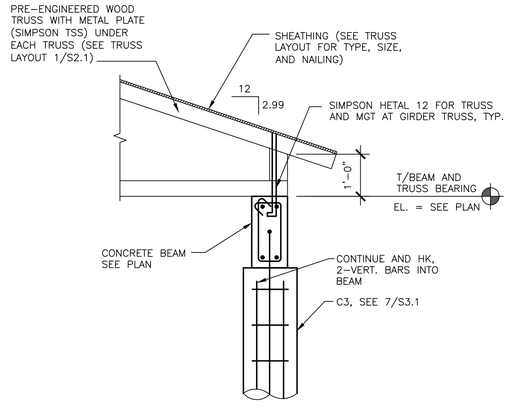

7 S3.2 SECTION
SCALE: 3/4" = 1'-0"

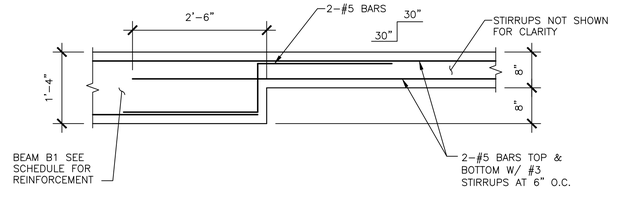

8 S3.2 BOND BEAM STEP DETAIL
SCALE: 3/4" = 1'-0"

CITY OF TAMPA
CONTRACT ADMINISTRATION DEPARTMENT
PLANNING AND DESIGN DIVISION
306 E. JACKSON STREET 4 NORTH
TAMPA, FLORIDA 33602
p: 813. 274. 8456 - f: 813. 274. 8080
url: www.tampagov.net

James E. Jackson, Jr. AIA, NOMA
City Architect
Edward D. Rice, AIA
Project Architect
Kevin L. Henika, AIA
Project Architect
Thomas A. Hester, Sr., AIA, NOMA
Project Architect
Kinsey C. Tillman
Drafting Technician
Jerry P. Sanders
Drafting Technician
Byron K. Thomas, LEED AP
Drafting Technician

MEP CONSULTANT
GRINER ENGINEERING, INC.
1628 1st. AVENUE NORTH
ST. PETERSBURG, FL 33713

STRUCTURAL CONSULTANT
BILLER REINHART ENGINEERING GROUP, INC.
3434 COLWELL AVENUE, SUITE 100
TAMPA, FL 33614

CIVIL CONSULTANT
5 M CIVIL LLC
12315 WYCLIFF PLACE
TAMPA, FL 33626

LANDSCAPE CONSULTANT
DAVID CONNER & ASSOCIATES
1508 W. SWANN AVENUE,SUITE 255
TAMPA, FL 33606

FIRE STATION 23

20770 TROUT CREEK DR
TAMPA, FLORIDA

DPW FILE NUMBER

DPW NUMBER
FD0116

ISSUE DATE
7-28-17

DRAWN BY
RC, RM

REVISIONS

SEAL
TO THE BEST OF THE ENGINEER'S KNOWLEDGE, THE PLANS AND SPECIFICATIONS COMPLY WITH THE APPLICABLE MINIMUM BUILDING CODES

ROBERT J. REINHART
FL. P.E. NO. 50076

SCALE: VARIES

SECTION & DETAILS

SHEET NUMBER
S3.2
X OF X

billerreinhart ENGINEERING GROUP INC.
3434 colwell avenue suite 100, tampa, florida 33614
telephone : 813.908.7203 fax : 813.931.5200
email : info@billerreinhart.com
State of Florida Certificate of Authorization No. 9149

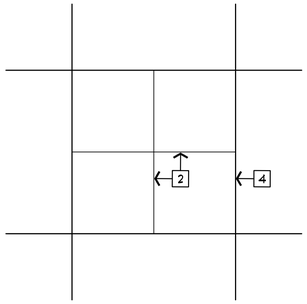

APRON PANEL DETAIL

NTS

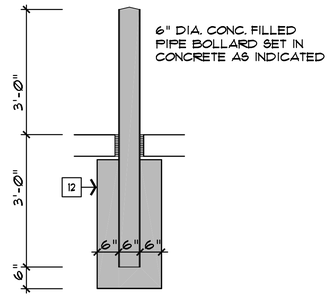

BOLLARD DETAIL

NTS

(SEE SHEET A2.1 FOR LOCATIONS)

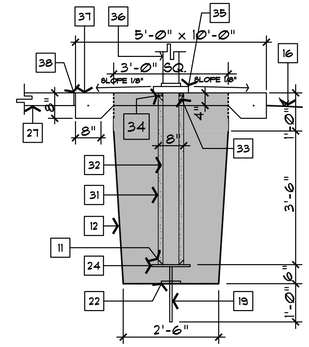

FLAGPOLE DETAIL

NTS

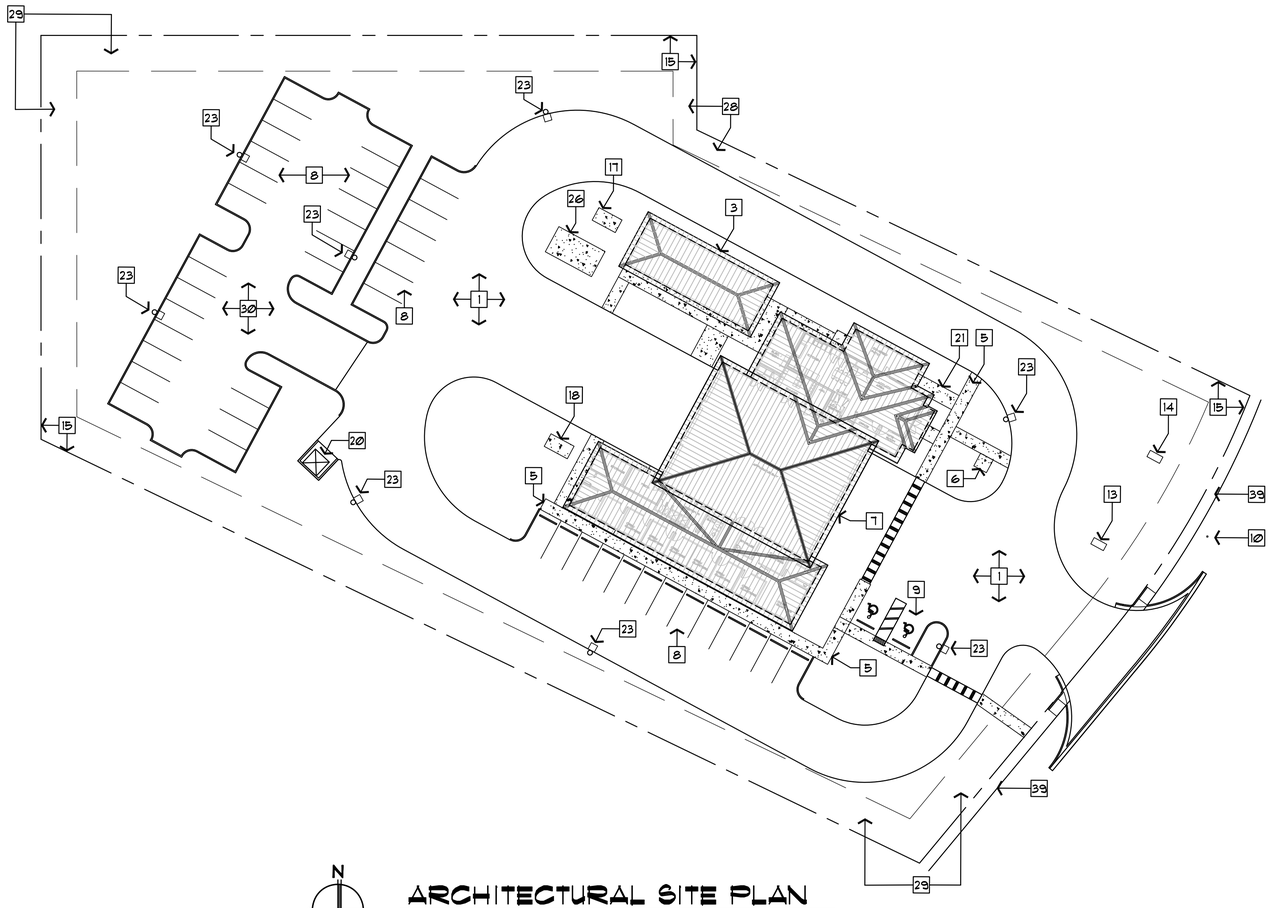

ARCHITECTURAL SITE PLAN

SCALE 1" = 30'-0"

GENERAL NOTES

KEY NOTES

1 CONCRETE APRON WITH EXPANSION JOINTS AS SHOWN, INDICATING PANELS. SEE PANEL DETAIL SHEET A-2.1

2 SAW CUT CONTROL JOINTS IN CROSS PATTERN

3 NEW TRAINING ROOM

4 EXPANSION JOINTS

5 5' SIDEWALK WITH CONTROL JOINTS AT 5'-0" O. C. AND EXPANSION JOINTS AT 25'-0" O. C. - PROVIDE MEDIUM BROOM FINISH WITH 3" SMOOTH TROWEL EDGE AND BROOM FINISH CHECKER BOARD. COORDINATE IN FIELD DURING LAYOUT WITH C.O.T. ARCHITECT.

6 FLAGPOLE. LOCATE IN CENTER OF 5'x10' AREA

7 NEW FIRE STATION

8 REGULAR SPACES. (SEE CIVIL DWGS.)

9 HANDICAP SPACES. (SEE CIVIL DWGS.)

10 INSTALL NEW FIRE HYDRANT (SEE CIVIL DRAWINGS)

11 FOUR STEEL WEDGES WELDED TO SLEEVE EACH 90 DEGREES TO CENTER POLE TYP.

12 ACCESS DRIVE - SEE CIVIL DRAWINGS

13 WATER SERVICE CONNECTION LOCATION - 15' x 20' CLEAR - SEE CIVIL DRAWINGS

14 POWER TRANSFORMER - SEE CIVIL AND ELECTRICAL DRAWINGS

15 PROPERTY LINE

16 FINISH GRADE

17 L.P. TANK FOR EMERGENCY GENERATOR

18 HVAC CHILLER - SEE MECHANICAL DWGS.

19 3/4" DIAMETER STEEL GROUND SPIKE

20 DUMPSTER - SEE CIVIL DWGS.

21 6'-0" SIDEWALK AND 5'-0" SIDEWALK ALONG WEST SIDE, PROVIDE CONTROL JOINTS AT 5'-0" O.C. AND EXPANSION JOINTS AT 25-0" O.C. - VERIFY IN FIELD FOR EXACT LOCATIONS

22 STEEL SUPPORT PLATE 6" SQYARE WELDED TO SPIKE

23 SITE LIGHTING - SEE ELECTRICAL DWGS.

24 EXISTING TREES ON SITE TO REMAIN

25 8" THICK CONCRETE APRON, COORDINATE WITH CIVIL DWGS.

26 EMERGENCY GENERATOR

27 CONCRETE SIDEWALK SEE CIVIL DRAWINGS

28 10' BUFFER

29 15' BUFFER

30 ASPHALT PARKING LOT SEE CIVIL DWGS.

31 16GA. CORRUGATED GALVANIZED STEEL FOUNDATION SLEEVE.

32 DRY SAND TAMPED IN AFTER PLUMBING.

33 FOUR HARDWOOD WEDGES (TYP.).

34 SEALANT (TYP.).

35 SPUN. ALUMINUM FLASH COLLAR

36 35'+- HIGH, CONE TAPERED ALUMINUM FLAG POLE.

37 CONCRETE SLAB WITH 1-#5 REBAR FOUR SIDES. SEE CIVIL DRAWINGS.

38 3/4" EXPANSION JOINT MATERIAL.

39 EXISTING CONCRETE SIDEWALK

ARCHITECTURAL SITE PLAN

CITY OF TAMPA
CONTRACT ADMINISTRATION DEPARTMENT
PLANNING AND DESIGN DIVISION

306 E. JACKSON STREET 4 NORTH
TAMPA, FLORIDA 33602
p. 813. 274. 8456 – f. 813. 274. 8080
url: www.tampagov.net

James E. Jackson, Jr. AIA, NOMA
City Architect

Edward D. Rice, AIA
Project Architect

Kevin L. Henika, AIA
Project Architect

Thomas A. Hester, Sr., AIA, NOMA
Project Architect

Kinsey C. Tillman
Drafting Technician

Jerry P. Sanders
Drafting Technician

Byron K. Thomas, LEED GA
Drafting Technician

MEP CONSULTANT
GRINER ENGINEERING, INC.
1628 1st. AVE. NORTH
ST. PETERSBURG, FL 33713

STRUCTURAL CONSULTANT
BILLER REINHART STRUCTURAL GROUP, INC.
4014 GUNN HWY. SUITE 248
TAMPA, FL 33713

CIVIL CONSULTANT
5 M CIVIL LLC
12315 WYCLIFF PLACE
TAMPA, FL 33626

LANDSCAPE CONSULTANT
DAVID CONNER & ASSOC.
1509 W. SWANN AVE.,SUITE 255
TAMPA, FL 33606

FIRE STATION 23
20770 CROSS CREEK DR.
TAMPA,FL 33647

DPW FILE NUMBER

DPW NUMBER
17-C-00037

ISSUE DATE
JULY 28, 2017

DRAWN BY
KINSEY TILLMAN

REVISIONS

SEAL

SCALE:

SHEET NAME

SHEET NUMBER
A-1.1

x OF x

K:\CAV\Planning & Design Division\Variety\~James Jackson\FIRE\DEPT\FIRE STATION 23 17-C-00037\FIRE STATION 23 17-C-00037 constr. docs\~fire 23 A-1.1 architectural site plan TRAINING revised 4-24-17.dwg, 8/1/2017 8:42:58 AM, Adobe PDF (temporary).pc3

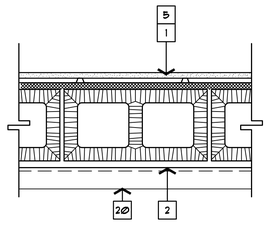

W-1 / A-2.1 — WALL TYPE
SCALE 1 1/2" = 1'-0"
R VALUE OF SYSTEM = R-5

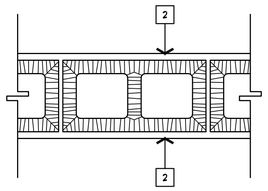

W-5 / A-2.1 — WALL TYPE
SCALE 1 1/2" = 1'-0"

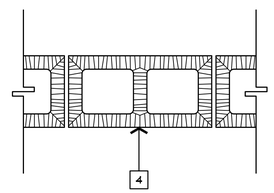

W-2 / A-2.1 — WALL TYPE
SCALE 1 1/2" = 1'-0"
1 HR. RATED U305 MIN.

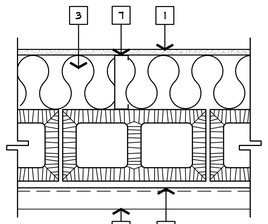

NOTE 20 AND NOTE 2 AT EXTERIOR WALL ONLY FOR WALL TYPE W-6

W-6 / A-2.1 — WALL TYPE
SCALE 1 1/2" = 1'-0"

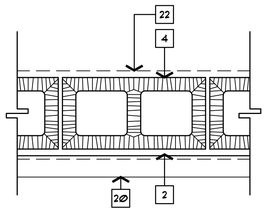

W-3 / A-2.1 — WALL TYPE
SCALE 1 1/2" = 1'-0"

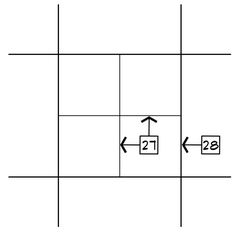

APRON PANEL DETAIL

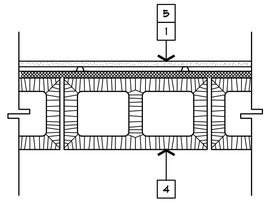

W-4 / A-2.1 — WALL TYPE
SCALE 1 1/2" = 1'-0"
1 HR. RATED U305 MIN.
R VALUE OF SYSTEM = R-5

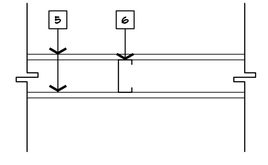

P-1 / A-2.1, P-1A / A-2.1 — PART. TYPE
SCALE 1 1/2" = 1'-0"

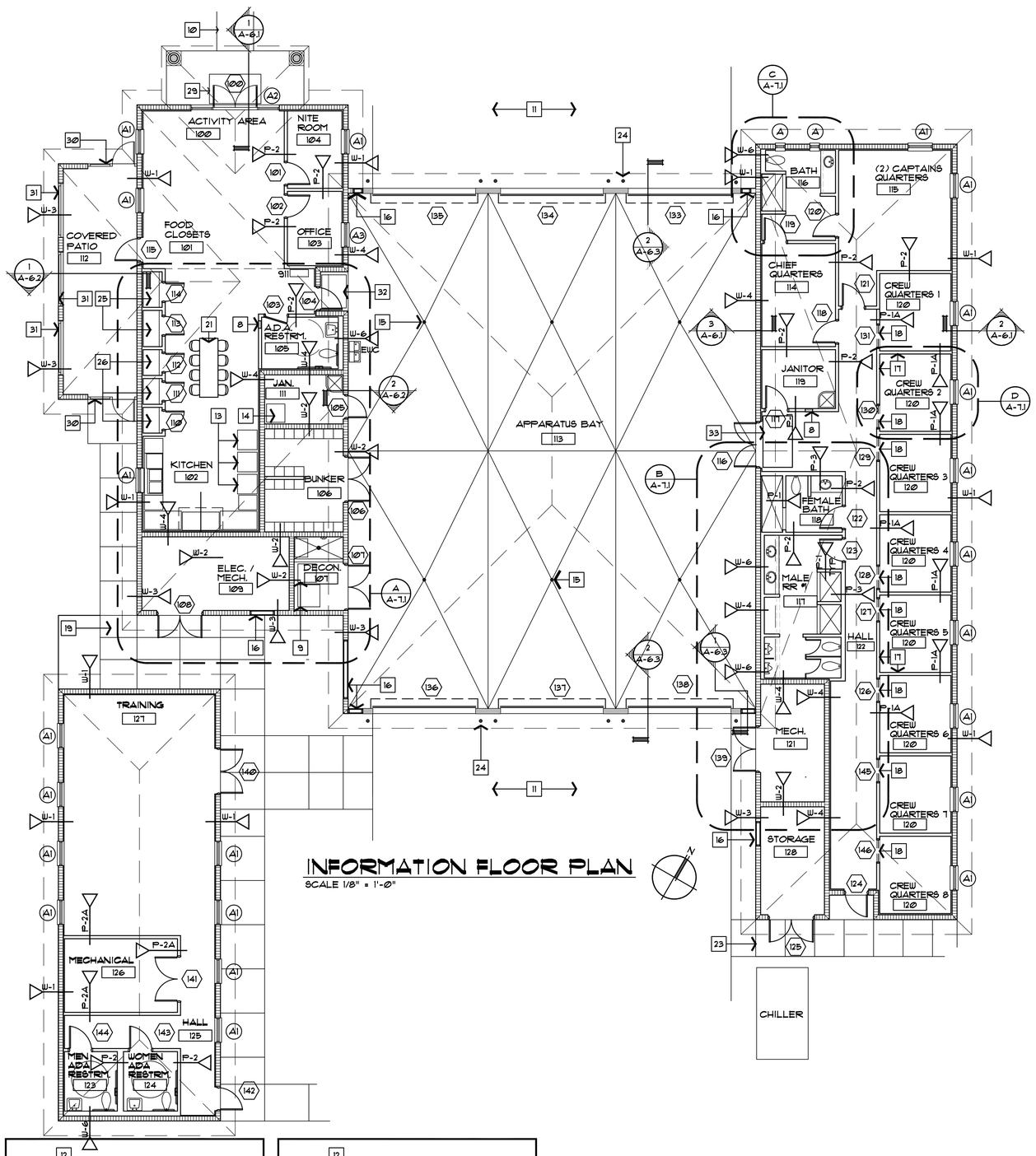

INFORMATION FLOOR PLAN
SCALE 1/8" = 1'-0"

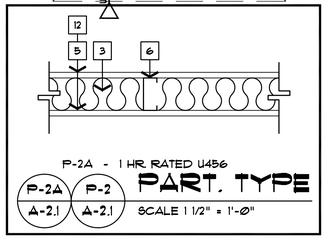

P-2A - 1 HR. RATED U456
P-2A / A-2.1, P-2 / A-2.1 — PART. TYPE
SCALE 1 1/2" = 1'-0"

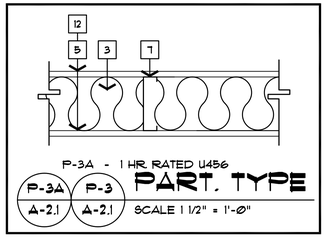

P-3A - 1 HR. RATED U456
P-3A / A-2.1, P-3 / A-2.1 — PART. TYPE
SCALE 1 1/2" = 1'-0"

GENERAL NOTES

1. ALL WINDOWS TO RECEIVE HORIZONTAL BLINDS - SEE SPECIFICATIONS FOR REQUIREMENTS

KEY NOTES

1. 5/8" GYPSUM BOARD ON 3/4" FURRING CHANNELS OVER 3/4" RIGID INSULATION AND 8" CMU
2. 3/4" CEMENT PLASTER WITH SAND FINISH
3. ACOUSTICAL BATT INSULATION
4. EXPOSED 8" CMU, PROVIDE FLUSH JOINTS, PAINTED
5. 5/8" GYPSUM BOARD PROVIDE 5/8" MOISTURE RESISTANT GYPSUM BOARD IN ALL RESTROOMS, JANITOR CLOSET AND KITCHEN AREAS
6. 3-5/8" METAL STUDS AT 16" O.C.
7. 6" METAL STUDS AT 16" O.C.
8. SEMI-RECESSED FIRE EXTINGUISHER CABINET AND FIRE EXTINGUISHER
9. DRYER - WASHING MACHINE ANCHORED TO FLOOR
10. CONCRETE SIDEWALK - SEE CIVIL DRAWINGS & SITE PLAN FOR SCORING
11. CONCRETE DRIVE - SEE CIVIL DRAWINGS
12. PROVIDE 5/8" TYPE X GYPSUM BOARD FOR PARTITION TYPES P - 2A & P - 3A
13. REFRIGERATOR
14. ICE MACHINE
15. FLOOR DRAIN - SEE PLUMBING PLANS
16. LOUVER - SEE MECHANICAL DWGS. FOR LOCATIONS AND SIZES
17. TOP OF PARTITION P-1A AT 72" AFF. PROVIDE 1 x 6 S4S OAK WOOD CAP
18. CREATE DOOR JAMB BY EXTENDING 6" OF PARTITION WALL UP TO 7'-0" AFF. PROVIDE ROD AND CURTAIN TYP AS INDICATED ON TOILET ACCESSORIES. TYP. AT EACH OPENING. STIFFEN JAMBS WITH 1 2x4 STUD AND 2 METAL STUDS EACH SIDE. W/ 3'-0" OPENING
19. 6' SIDEWALK & 5' SIDEWALK ALONG WEST SIDE, PROVIDE CONTRLO JOINTS AT 5' O.C. & EXPANSION JOINTS AT 25' O.C. - VERIFY IN FIELD FOR EXACT LOCATIONS.
20. THIN SET STONE WITH WAINSCOT CAP COORDINATE WITH EXTERIOR ELEVATIONS FOR ALL LOCATIONS
21. TABLE SHOWN FOR CLARITY
22. SEE ELEVATIONS AND SECTIONS FOR CEMENT PLASTER LOCATIONS
23. 5' SIDEWALK WITH CONTROL JOINTS AT 5' O.C. AND EXPANSION JOINTS AT 25 ' O.C. PROVIDE MEDIUM BROOM FINISH WITH 3" SMOOTH TROWEL EDGE AND BROOM FINISH CHECKERBOARD. COORDINATE IN FIELD WITH CITY OF TAMPA, ARCHITECT.
24. 6" DIA. CONC. FILLED PIPE BOLLARD SET IN CONC. - SEE DETAIL THIS SHT.
25. GENERAL STORAGE CLOSET - PAINTED TO MATCH SPACE
26. SHIFT STORAGE CLOSET - PAINTED TO MATCH SPACE
27. CONTROL JOINTS
28. EXPANSION JOINTS
29. 7'-0" x 4'-0" - 1¼ LEVEL BED CAST IN STAINLESS STL. GRILL W/ STAINLESS STL. WIPE OFF MAT. SIMILAR TO BABCOCK DAVIS eleGRILL MODEL BFE58LBC. WWW.babcockdavis.com 1 888 412-3726
30. 3'-0" x 7'-0" ALUMINUM SCREEN DOOR AND SIDE PANEL. SIMILAR OR EQUAL TO SCREEN TIGHT SYSTEM. WWW.screentight.com 1 800 168-7325
31. 4'-0" x 7'-4" ALUMINUM SCREEN WITH FRAME. SIMILAR OR EQUAL TO SCREEN TIGHT SYSTEM. WWW.screentight.com 1 800 168-7325
32. 4'-6" L x 3'-4" W MATRAC WITH VINYL ADHESIVE TREAD SIMILAR TO babcockdavis BMT38B WITH SURFACE MOUNTING FRAME BTF38BAM. WWW.babcockdavis.com 1 888 412-3726
33. 7'-0" L x 4'-0" W MATRAC WITH VINYL ADHESIVE TREAD SIMILAR TO babcockdavis BMT38B WITH SURFACE MOUNTING FRAME BTF38BAM. WWW.babcockdavis.com 1 888 412-3726

INFORMATION PLAN

CITY OF TAMPA
CONTRACT ADMINISTRATION DEPARTMENT
PLANNING AND DESIGN DIVISION
306 E. JACKSON STREET 4 NORTH
TAMPA, FLORIDA 33602
p. 813. 274. 8456 - f. 813. 274. 8080
url: www.tampagov.net

James E. Jackson, Jr. AIA, NOMA
City Architect
Edward D. Rice, AIA
Project Architect
Kevin L. Herlica, AIA
Project Architect
Thomas A. Hester, Sr., AIA, NOMA
Project Architect
Kinsey C. Tillman
Drafting Technician
Jerry P. Sanders
Drafting Technician
Byron K. Thomas, LEED AP
Drafting Technician

MEP CONSULTANT
GRINER ENGINEERING, INC.
1628 1st. AVENUE NORTH
ST. PETERSBURG, FL 33713

STRUCTURAL CONSULTANT
BILLER REINHART
STRUCTURAL GROUP, INC.
4014 GUNN HWY. SUITE 248
TAMPA, FL 33713

CIVIL CONSULTANT
5 M CIVIL LLC
12315 WYCLIFF PLACE
TAMPA, FL 33626

LANDSCAPE CONSULTANT
DAVID CONNER & ASSOCIATES
1509 W. SWANN AVENUE,SUITE 255
TAMPA, FL 33606

FIRE STATION 23
20770 TROUT CREEK DR.
TAMPA, FL 33647

DPW FILE NUMBER

DPW NUMBER
17-C-00037

ISSUE DATE
JULY 28, 2017

DRAWN BY
KINSEY TILLMAN

REVISIONS

SEAL

SCALE: VARIES

SHEET NUMBER
A-2.1

X OF X

K:\CA\Ramsey & Design Division\Ramsey\~James Jackson\FIRE\DEPT\FIRE STATION 23 17-C-00037\FIRE STATION 23 17-C-00037\CONST. docs\~We 23 A-2.1 info ffr plan REVISED 4-24-17.dwg, 8/1/2017 8:45:55 AM, Adobe PDF (temporary).pc3

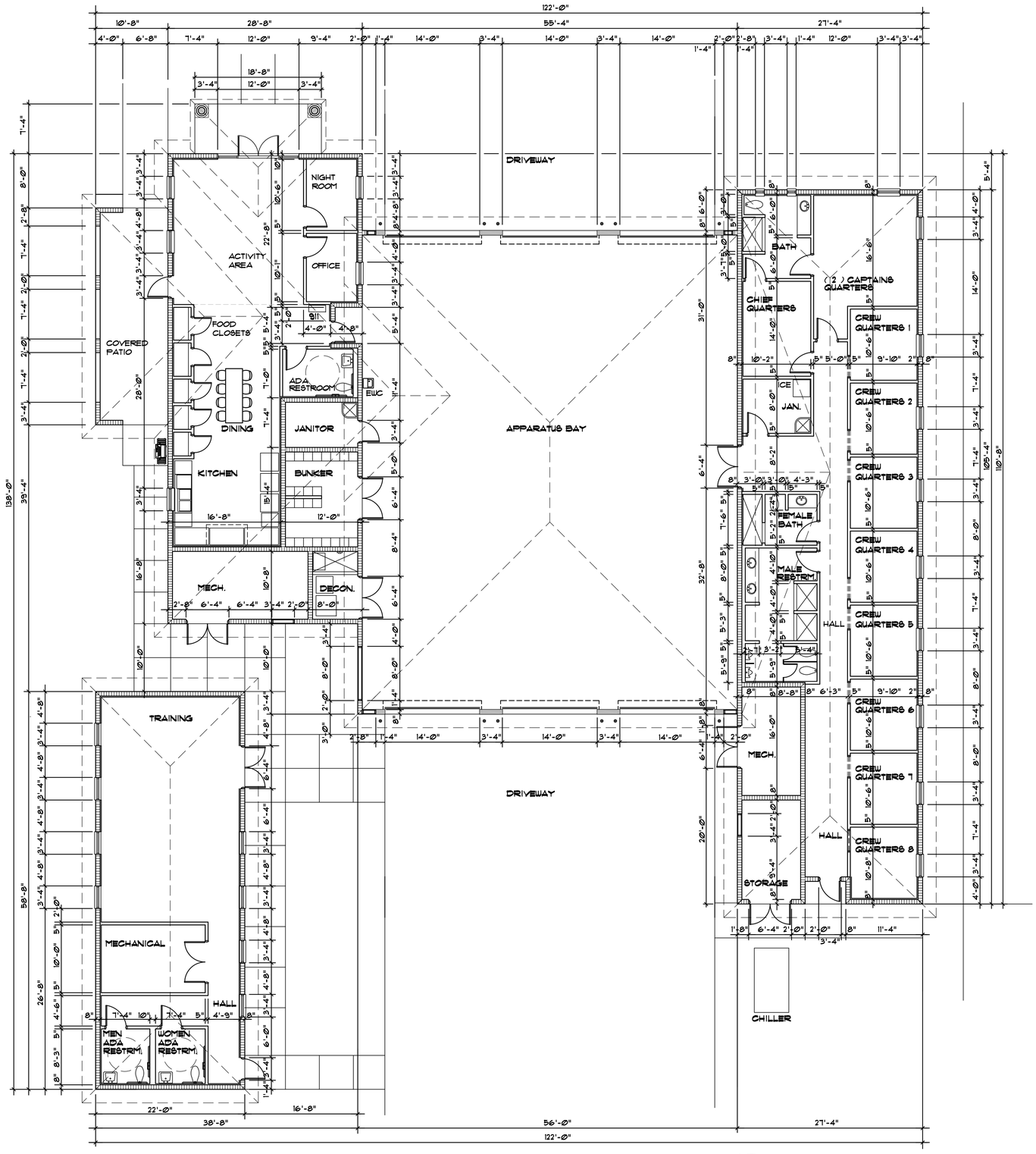

DIMENSION FLOOR PLAN

SCALE 1/8" = 1'-0"

10,103 S.F.

GENERAL NOTES

KEY NOTES

DIMENSION PLAN

CITY OF TAMPA
CONTRACT ADMINISTRATION DEPARTMENT
PLANNING AND DESIGN DIVISION

306 E. JACKSON STREET 4 NORTH
TAMPA, FLORIDA 33602
p. 813. 274. 8456 – f. 813. 274. 8080
url: www.tampagov.net

James E. Jackson, Jr. AIA, NOMA
City Architect

Edward D. Rice, AIA
Project Architect

Kevin L. Henika, AIA
Project Architect

Thomas A. Hester, Sr., AIA, NOMA
Project Architect

Kinsey C. Tillman
Drafting Technician

Jerry P. Sanders
Drafting Technician

Byron K. Thomas, LEED AP
Drafting Technician

MEP CONSULTANT
GRINER ENGINEERING, INC.
1628 1st. AVENUE NORTH
ST. PETERSBURG, FL 33713

STRUCTURAL CONSULTANT
BILLER REINHART
STRUCTURAL GROUP, INC.
4014 GUNN HWY. SUITE 248
TAMPA, FL 33713

CIVIL CONSULTANT
5 M CIVIL LLC
12315 WYCLIFF PLACE
TAMPA, FL 33626

LANDSCAPE CONSULTANT
DAVID CONNER & ASSOCIATES
1509 W. SWANN AVENUE,SUITE 255
TAMPA, FL 33606

FIRE STATION 23
20770 TROUT CREEK DR.
TAMPA, FL 33647

DPW FILE NUMBER

DPW NUMBER
17-C-00037

ISSUE DATE
JULY 28, 2017

DRAWN BY
KINSEY TILLMAN

REVISIONS

SEAL

SCALE: VARIES

SHEET NUMBER
A-2.2

X OF X

K:\CAD\Tanney & Design Division\Tanney\~James Jackson\FIRE\DEPT\FIRE STATION 23 17-C-00037\FIRE STATION 23 17-C-00037 constr. docs\~ fire 23 A-2.2 dim flr plan TRAINING revised 4-24-17.dwg, 8/1/2017 8:47:10 AM, Adobe PDF (temporary).pc3

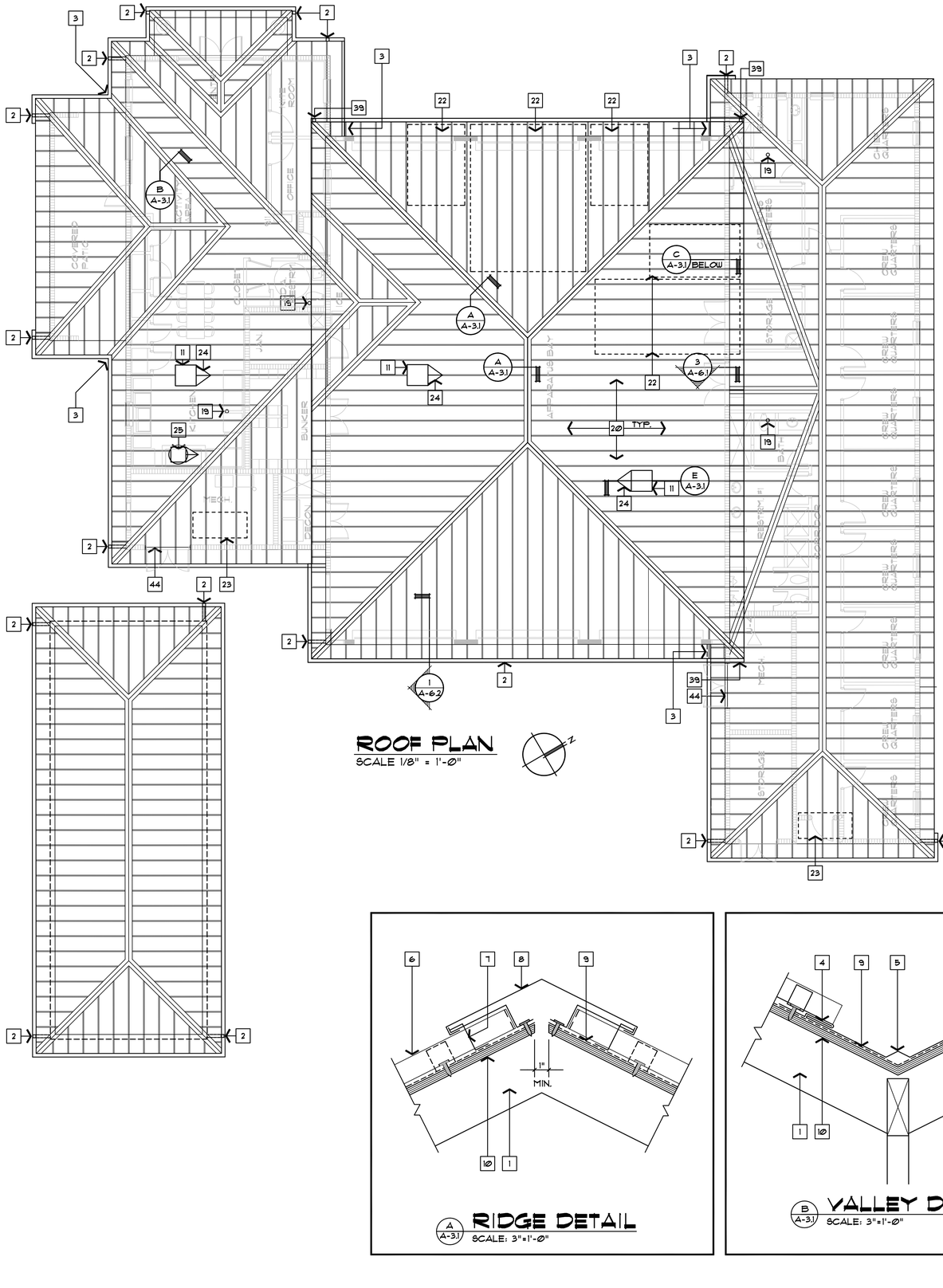

ROOF PLAN

SCALE 1/8" = 1'-0"

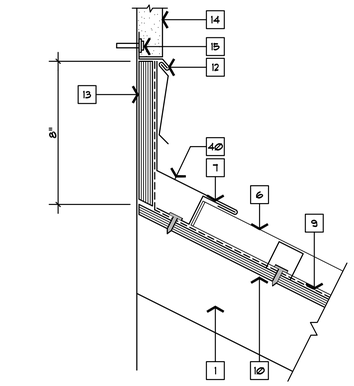

C A-3.1 RAKE WALL DETAIL

SCALE: 3"=1'-0"

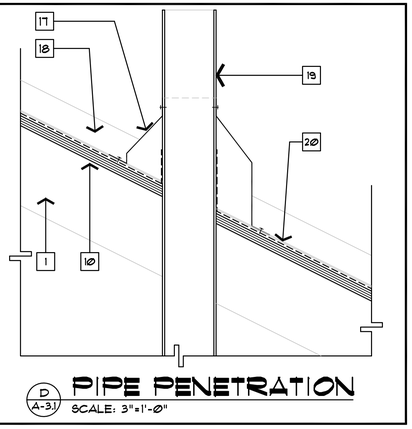

D A-3.1 PIPE PENETRATION

SCALE: 3"=1'-0"

A A-3.1 RIDGE DETAIL

SCALE: 3"=1'-0"

B A-3.1 VALLEY DETAIL

SCALE: 3"=1'-0"

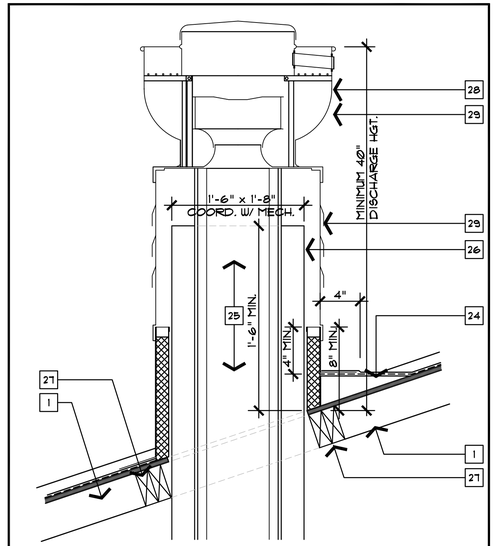

E A-3.1 HOOD DUCT AND EXHAUST FAN CURB DETAIL

SCALE: 1-1/2" = 1'-0"

(SIMILAR AT TOILET ROOM EXHAUST FAN - OMIT CHASE)

GENERAL NOTES

1. PROVIDE 10 DOWNSPOUT LOCATIONS WITH SPLASH BLOCKS. ALL DOWNSPOUTS RETURN AGAINST WALL SURFACE. FIELD COORDINATE ALL LOCATIONS

KEY NOTES

1 PRE-ENGINEERED WOOD TRUSSES
2 5" OGEE GUTTER WITH DOWNSPOUTS.
3 ALUM. SPLASH GUARDS AT VALLEY (TYP.)
4 JOGGLE CLEAT CONTINUOUS
5 VALLEY TRIM
6 1-1/2" HIGH SEAM METAL ROOF (TYP.).
7 ZEE CLOSURE TRIM (TYP.).
8 RIDGE CAP.
9 60 MIL. GRACE ICE AND WATER SHIELD
10 1/2" EXTERIOR GRADE PLYWOOD (TYP.)
11 MECHANICAL FANS ON PREMANUFACTURED CURBS. - SEE MECHANICAL DWGS. FLASHING PER MFGR. INSTRUCTIONS
12 ALUMINUM CEMENT PLASTER SNAPLOCK COUNTER-FLASH TO MATCH STANDING SEAM ROOF.
13 3/4" P.T. PLYWOOD BASEBOARD.
14 STUCCO OR THIN STONE
15 1/4"X1-1/4" DRIVE PIN AT 16" O.C.
16 MTL. DRIP TO MATCH MTL. ROOF
17 ROOF JACK (DECK TILE)
18 1-1/2" STANDING SEAM BEYOND
19 VENT STACK - SEE DETAIL D / A-3.1
20 1-1/2" STANDING SEAM METAL ROOF ON 60 MIL SELF ADHESIVE MEMBRANE, ON 1/2" EXTERIOR GRADE PLYWOOD, ON PRE-ENGINEERED WOOD TRUSSES
21 3/4" CEMENT PLASTER FINISH
22 PHOTOVOLTAIC SYSTEM SEE ELECTRICAL DRAWINGS. COORDINATE WITH METAL ROOFING REQUIREMENTS.
23 PHOTOVOLTAIC SYSTEM FOR PLUMBING SEE PLUMBING DRAWINGS.
24 CRICKET CONSTRUCTED FROM SHT. MTL.
25 RANGE HOOD EXHAUST DUCT - SEE DETAIL E/A-3.1 AND MECH. DWGS.
26 1 HR. FIRE RATED DUCT CHASE (UL DES: U469)
27 P.T. WOOD BLOCKING
28 ROOF EXHAUST FAN - SEE MECH. DWGS.
29 PAINT EXHAUST FAN, CURB EXTENSION AND ROOF CURB TO MATCH COLOR OF MTL. ROOF COLOR TO BE SELECTED BY ARCHITECT - PROVIDE INDUSTRIAL COATING, TWO COMPONENT LOW VOC, ALIPHATIC POLYURETHANE RESIN FINISH
30 3/4" CEMENT PLASTER SOFFIT ON PAPER BACKED RIBLATH
31 P.T. 2 x WOOD TRIM, PAINTED
32 P.T. 2 x 4 WOOD SUB-FASCIA.
33 P.T. 2 x 6 WOOD FASCIA COMPONENT,
34 P.T. 2 x 8 WOOD FASCIA COMPONENT.
35 P.T. 2 x 4 FRAMING, MAX. 24" O.C.
36 PRECAST CONCRETE LINTEL - SEE STRUCTURAL DWGS.
37 C.I.P. CONCRETE TIE BEAM - SEE STRUCTURAL DWGS.
38 ADD P.T. 2 x WOOD BLOCKING TO FASCIA FOR METAL SUPPORT
39 5" OGEE GUTER W/ DOWNSPOUT ONTO ROOF
40 PITCH BREAK TRIM - PROVIDE CLOSURE METAL AT ENDS FOR FASCIA TRANSITION
41 METAL LOUVER - ALIGN WITH RIGHT SIDE OF DOOR AND IN WALL LOCATION. FIELD VERIFY
42 ALUM. BREAKMETAL FLASHING TO MATCH LOUVER
43 PROVIDE ALUM. BREAK METAL FASCIA COVERING. ALUM. SHALL BE THE SAME THICKNESS AS THE METAL ROOFING CONTINUOUS. COLOR TO BE SELECTED FROM FULL RANGE OF COLORS.
44 LOUVER, SEE DETAIL C SHEET A-6.3 COORDINATE WITH MECHANICAL DWGS.

ROOF PLAN / DETAILS

CITY OF TAMPA
CONTRACT ADMINISTRATION DEPARTMENT
PLANNING AND DESIGN DIVISION
306 E. JACKSON STREET 4 NORTH
TAMPA, FLORIDA 33602
p. 813. 274. 8456 – f. 813. 274. 8080
url: www.tampagov.net

James E. Jackson, Jr. AIA, NOMA
City Architect
Edward D. Rice, AIA
Project Architect
Kevin L. Herlica, AIA
Project Architect
Thomas A. Hester, Sr., AIA, NOMA
Project Architect
Kinsey C. Tillman
Drafting Technician
Jerry P. Sanders
Drafting Technician
Byron K. Thomas, LEED AP
Drafting Technician

MEP CONSULTANT
GRINER ENGINEERING, INC.
1628 1st. AVENUE NORTH
ST. PETERSBURG, FL 33713

STRUCTURAL CONSULTANT
BILLER REINHART
STRUCTURAL GROUP, INC.
4014 GUNN HWY. SUITE 248
TAMPA, FL 33713

CIVIL CONSULTANT
5 M CIVIL LLC
12315 WYCLIFF PLACE
TAMPA, FL 33626

LANDSCAPE CONSULTANT
DAVID CONNER & ASSOCIATES
1509 W. SWANN AVENUE,SUITE 255
TAMPA, FL 33606

FIRE STATION 23
20770 TROUT CREEK DR.
TAMPA, FL 33647

DPW FILE NUMBER

DPW NUMBER
17-C-00037

ISSUE DATE
JULY 28, 2017

DRAWN BY
KINSEY TILLMAN

REVISIONS

SEAL

SCALE: VARIES

SHEET NUMBER
A-3.1

X OF X

K:\CA\Benning & Design Division\Jeremy\~James Jackson\FIRE\DEPT\FIRE STATION 23 17-C-00037\FIRE STATION 23 17-C-00037 constr. docs\~fire 23 A-3.1 roof plan.dwg, 8/1/2017 8:48:40 AM, Adobe PDF (temporary).pc3

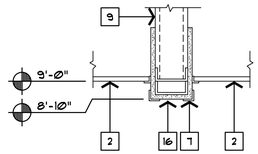

1 A-4.1 SECTION
SCALE: 1 1/2"=1'-0"

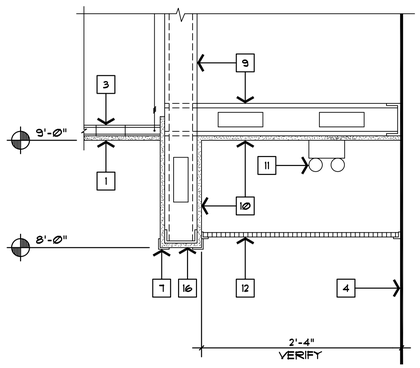

2 A-4.1 SECTION
SCALE: 1 1/2"=1'-0"

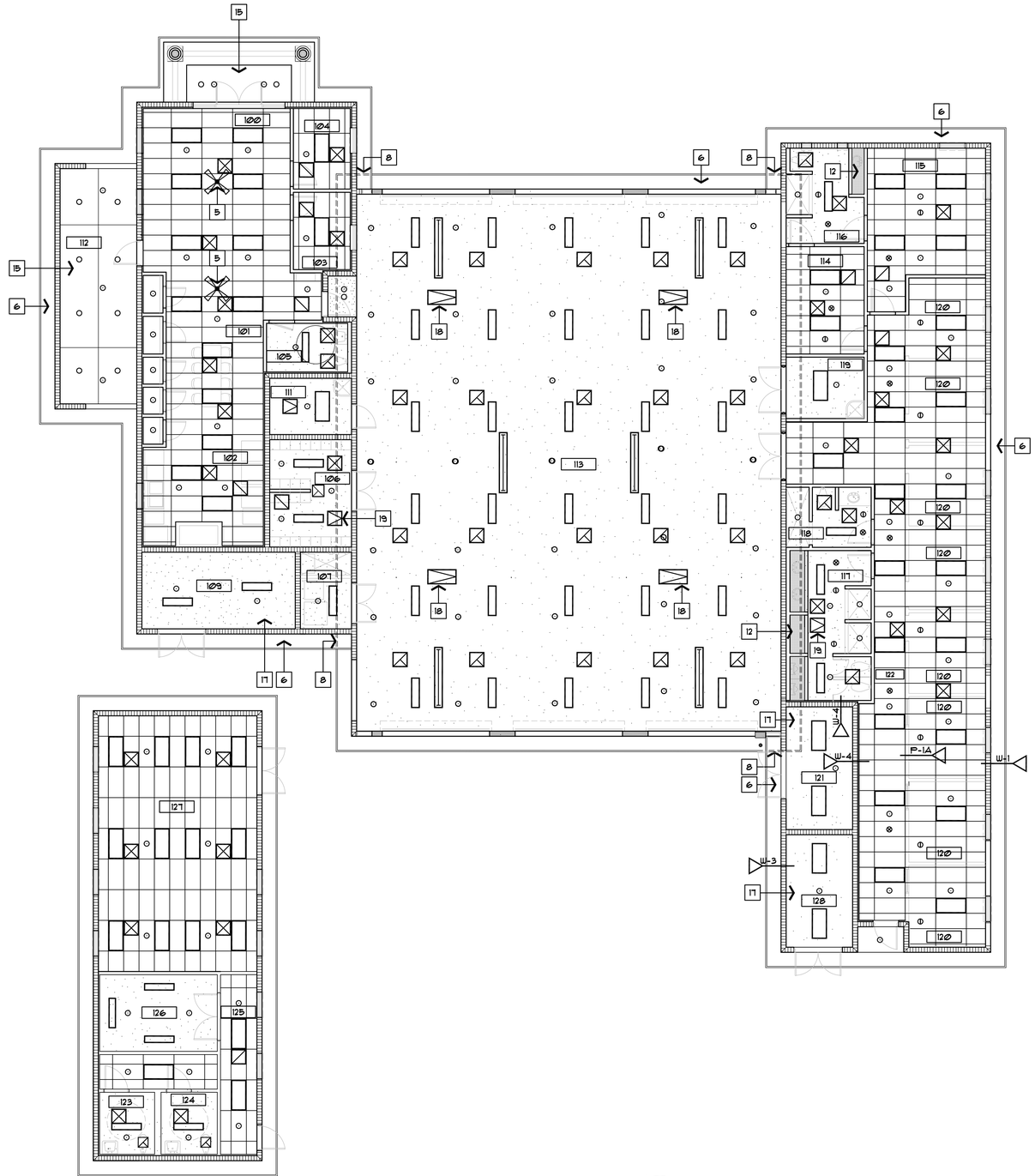

REFLECTED CEILING PLAN
SCALE 1/8" = 1'-0"

GENERAL NOTES

1. COORDINATE LOCATION OF CEILING ACCESS DOORS WITH EXHAUST FAN OR MECHANICAL ITEMS
2. SEE ELECTRICAL FOR EXTERIOR LIGHT REQUIREMENTS, AND LIFE SAFETY DEVICES

KEY NOTES

1. 1/2" GYPSUM BOARD ON SUSPENDED FURRING SYSTEM (TYP.).
2. ACOUSTICAL TILE.
3. MAIN BEAM ADAPTER CLIP.
4. FACE OF WALL.
5. CEILING FAN
6. 3/4" CEM. PLASTER ON RIB LATH SOFFIT
7. CORNER BEAD.
8. SOFFIT DASHED FOR CLAIRITY
9. 3-5/8" METAL STUDS AT 24" O.C.
10. 1/2" GYPSUM BOARD. PAINT WHITE.
11. LIGHT FIXTURE - SEE SCHEDULE.
12. EGG CRATE PARABOLIC LENS - 1/2"x1/2"x1/2" SIM. TO WESTERN ILLUMINATED PLASTIC MODEL # 83-24-EC WWW.WESTERNPLASTICS.COM
13. NOT USED
14. NOT USED
15. CEMENT PLASTER CEILING
16. 5/8" GYPSUM BOARD
17. PROVIDE 2 LAYERS OF TYPE "X" 5/8" GYPSUM BOARD
18. 22" x 36" FLUSH MOUNTED ACCESS DOOR
19. 22" x 24" FLUSH MOUNTED ACCESS DOOR

LEGEND

- 1 x 4 FLUORESCENT LIGHT
- 2 x 4 FLUORESCENT LIGHT
- RECESSED LIGHT FIXTURE
- 2 x 4 SUSPENDED CEILING SYSTEM
- GYPSUM BOARD SUSPENDED CEILING
- CEILING DIFFUSER SUPPLY
- RETURN AIR
- EXHAUST FAN
- 24" x 24" CEILING ACCESS DOOR
- SPRINKLER HEAD

911 LEGEND

- 8" SPEAKERS
- 6" CAN LIGHTS
- 2 LAMP FLOURESCENT 96" WITH COVERS
- 15 WATT HORNS

REFLECTED CEILING PLAN

CITY OF TAMPA
CONTRACT ADMINISTRATION DEPARTMENT
PLANNING AND DESIGN DIVISION
306 E. JACKSON STREET 4 NORTH
TAMPA, FLORIDA 33602
p: 813. 274. 8456 – f: 813. 274. 8080
url: www.tampagov.net

James E. Jackson, Jr. AIA, NOMA
City Architect
Edward D. Rice, AIA
Project Architect
Kevin L. Henika, AIA
Project Architect
Thomas A. Hester, Sr., AIA, NOMA
Project Architect
Kinsey C. Tillman
Drafting Technician
Jerry P. Sanders
Drafting Technician
Byron K. Thomas, LEED AP
Drafting Technician

MEP CONSULTANT
GRINER ENGINEERING, INC.
1628 1st. AVENUE NORTH
ST. PETERSBURG, FL 33713

STRUCTURAL CONSULTANT
BILLER REINHART STRUCTURAL GROUP, INC.
4014 GUNN HWY. SUITE 248
TAMPA, FL 33713

CIVIL CONSULTANT
5 M CIVIL LLC
12315 WYCLIFF PLACE
TAMPA, FL 33626

LANDSCAPE CONSULTANT
DAVID CONNER & ASSOCIATES
1509 W. SWANN AVENUE,SUITE 255
TAMPA, FL 33606

FIRE STATION 23
20770 TROUT CREEK DR.
TAMPA, FL 33647

DPW FILE NUMBER

DPW NUMBER
17-C-00037

ISSUE DATE
JULY 28, 2017

DRAWN BY
KINSEY TILLMAN

REVISIONS

SEAL

SCALE: VARIES

SHEET NUMBER
A-4.1

x OF x

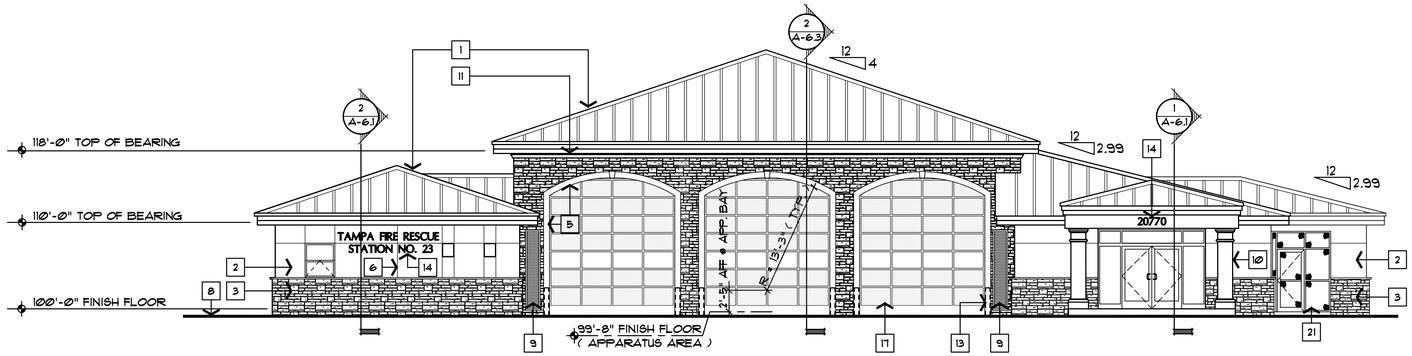

FRONT ELEVATION

SCALE 1/8" = 1'-0"

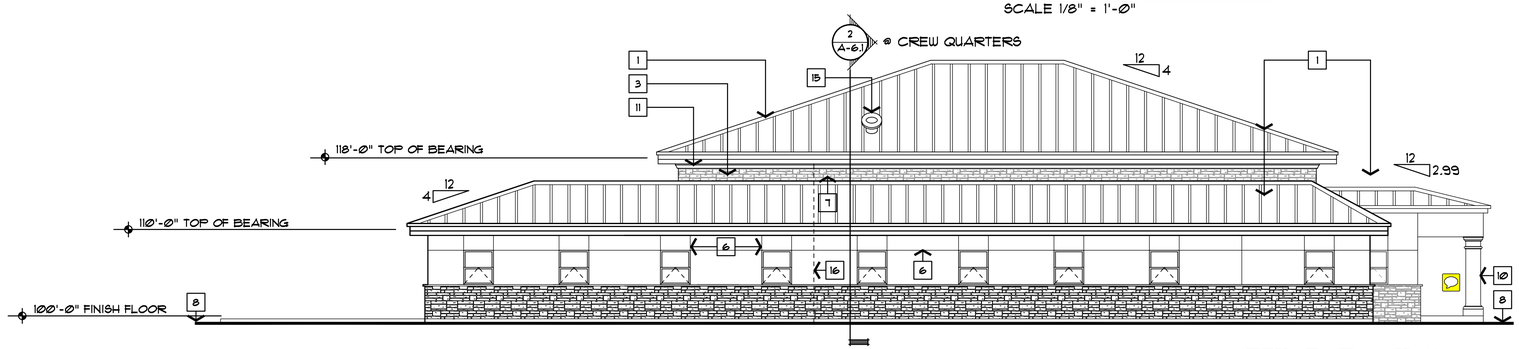

LEFT ELEVATION

SCALE 1/8" = 1'-0"

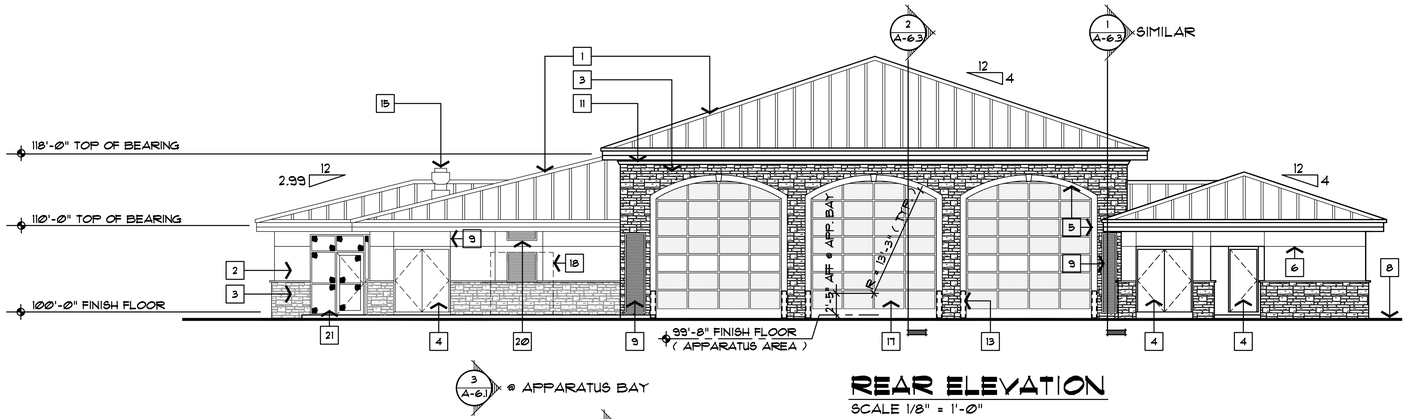

REAR ELEVATION

SCALE 1/8" = 1'-0"

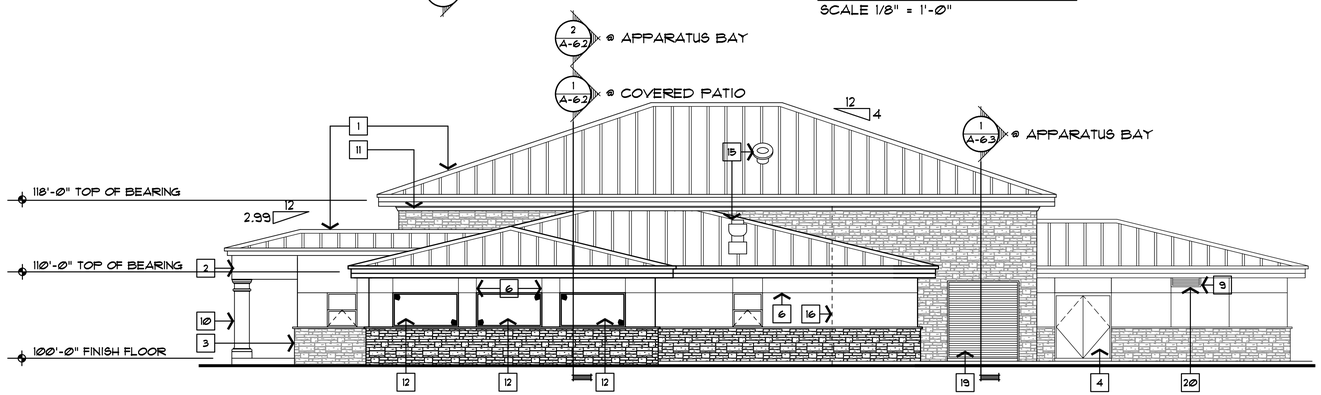

RIGHT ELEVATION

SCALE 1/8" = 1'-0"

GENERAL NOTES

KEY NOTES

1. 1-1/2" STANDING SEAM METAL ROOF
2. CEMENT PLASTER W/ SAND FINISH. PAINTED
3. THIN STONE VENEER WITH WAINSCOT CAP
4. METAL DOOR - PAINTED
5. 8" WIDE CEMENT BAND
6. CONTROL JOINT
7. RAKE WALL SEE DETAIL C/A-3.1
8. FINISH GRADE
9. LOUVER - SEE MECHANICAL DRAWINGS FOR SIZES, LOCATIONS ETC.
10. FIBERGLASS COLUMN - PAINTED
11. 6" FOAM CROWN MOLDING - PAINTED
12. OPENING IN WALL WITH ALUM. SCREEN 4'-0" H x 7'-4" W
13. 6" CONC. FILLED PIPE BOLLARDS DASHED FOR CLARITY
14. 10" CAST METAL LETTERS
15. MECHANICAL HOOD - SEE MECH. DWGS.
16. EXPANSION JOINT
17. O.H. DOOR - PAINTED
18. EMERGENCY GENERATOR DASHED FOR CLARITY
19. LOUVER 8' WIDE x 8' HIGH - SEE MECHANICAL DRAWINGS
20. LOUVER - SEE DETAIL C SHEET A-6.3 COORDINATE WITH MECHANICAL DWGS.
21. 3' x 7' ALUM. SCREEN DOOR WITH ALUM. COORDINATE WITH MECHANICAL DWGS.

EXTERIOR ELEVATIONS

CITY OF TAMPA
CONTRACT ADMINISTRATION DEPARTMENT
PLANNING AND DESIGN DIVISION
306 E. JACKSON STREET 4 NORTH
TAMPA, FLORIDA 33602
p: 813. 274. 8456 – f: 813. 274. 8080
url: www.tampagov.net

James E. Jackson, Jr. AIA, NOMA
City Architect
Edward D. Rice, AIA
Project Architect
Kevin L. Henika, AIA
Project Architect
Thomas A. Hester, Sr., AIA, NOMA
Project Architect
Kinsey C. Tillman
Drafting Technician
Jerry P. Sanders
Drafting Technician
Byron K. Thomas, LEED AP
Drafting Technician

MEP CONSULTANT
GRINER ENGINEERING, INC.
1628 1st. AVENUE NORTH
ST. PETERSBURG, FL 33713

STRUCTURAL CONSULTANT
BILLER REINHART STRUCTURAL GROUP, INC.
4014 GUNN HWY. SUITE 248
TAMPA, FL 33713

CIVIL CONSULTANT
5 M CIVIL LLC
12315 WYCLIFF PLACE
TAMPA, FL 33626

LANDSCAPE CONSULTANT
DAVID CONNER & ASSOCIATES
1509 W. SWANN AVENUE,SUITE 255
TAMPA, FL 33606

FIRE STATION 23
20770 TROUT CREEK DR.
TAMPA, FL 33647

DPW FILE NUMBER

DPW NUMBER
17-C-00037

ISSUE DATE
JULY 28, 2017

DRAWN BY
KINSEY TILLMAN

REVISIONS

SEAL

SCALE: VARIES

SHEET NUMBER
A-5.1

x OF x

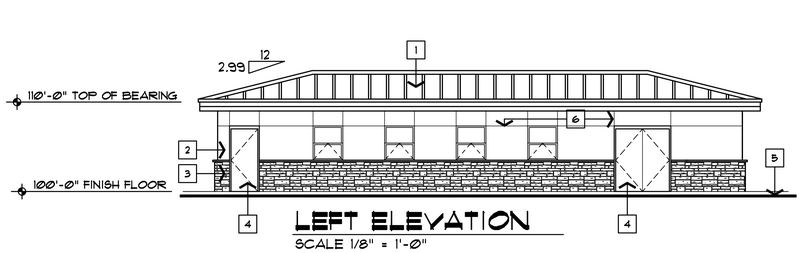

LEFT ELEVATION
SCALE 1/8" = 1'-0"

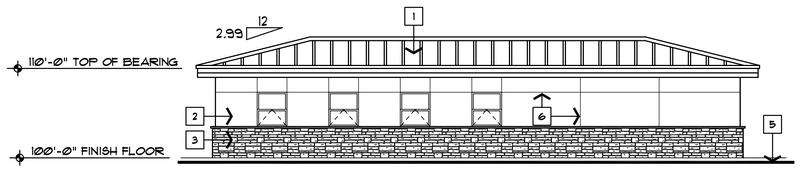

RIGHT ELEVATION
SCALE 1/8" = 1'-0"

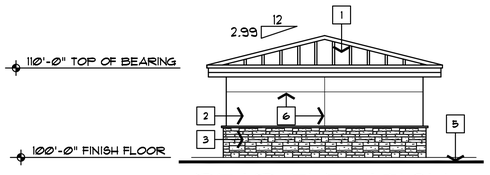

REAR ELEVATION
SCALE 1/8" = 1'-0"

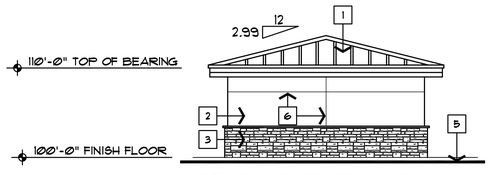

FRONT ELEVATION
SCALE 1/8" = 1'-0"

GENERAL NOTES

KEY NOTES

1. 1-1/2" STANDING SEAM METAL ROOF
2. CEMENT PLASTER W/ SAND FINISH. PAINTED
3. THIN STONE VENEER WITH WAINSCOT CAP
4. METAL DOOR - PAINTED
5. FINISH GRADE
6. CONTROL JOINT

EXTERIOR ELEVATIONS

CITY OF TAMPA
CONTRACT ADMINISTRATION
DEPARTMENT
PLANNING AND DESIGN DIVISION

306 E. JACKSON STREET 4 NORTH
TAMPA, FLORIDA 33602
p. 813. 274. 8456 – f. 813. 274. 8080
url: www.tampagov.net

James E. Jackson, Jr. AIA, NOMA
City Architect
Edward D. Rice, AIA
Project Architect
Kevin L. Henika, AIA
Project Architect
Thomas A. Hester, Sr., AIA, NOMA
Project Architect

Kinsey C. Tillman
Drafting Technician
Jerry P. Sanders
Drafting Technician
Byron K. Thomas, LEED AP
Drafting Technician

MEP CONSULTANT
GRINER ENGINEERING, INC.
1628 1st. AVENUE NORTH
ST. PETERSBURG, FL 33713

STRUCTURAL CONSULTANT
BILLER REINHART
STRUCTURAL GROUP, INC.
4014 GUNN HWY. SUITE 248
TAMPA, FL 33713

CIVIL CONSULTANT
B M CIVIL LLC
12315 WYCLIFF PLACE
TAMPA, FL 33626

LANDSCAPE CONSULTANT
DAVID CONNER & ASSOCIATES
1509 W. SWANN AVENUE,SUITE 255
TAMPA, FL 33606

FIRE STATION 23
20770 TROUT CREEK DR.
TAMPA, FL 33647

DPW FILE NUMBER

DPW NUMBER
17-C-00037

ISSUE DATE
JULY 28, 2017

DRAWN BY
KINSEY TILLMAN

REVISIONS

SEAL

SCALE: VARIES

SHEET NUMBER
A-5.2

X OF X

K:\CAD\Ramsey & Design Division\Kinsey\~James Jackson\FIRE\DEPT\FIRE STATION 23 17-C-00037\FIRE STATION 23 17-C-00037 constr. docs\~ fire 23 A-2.2 ext. elev.TRAINING.dwg, 8/1/2017 8:55:13 AM, Adobe PDF (temporary).pc3

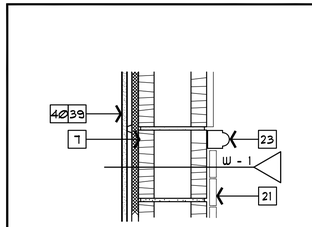

A A-6.1 **DETAIL** SCALE 1-1/2" =1'-0"

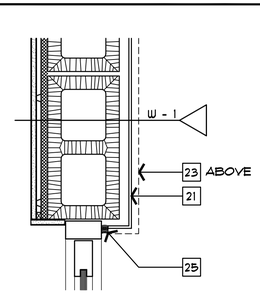

B A-6.1 **DETAIL** SCALE 1-1/2" =1'-0"

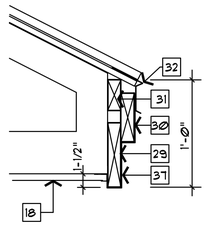

C A-6.1 **DETAIL** SCALE 1-1/2" =1'-0"

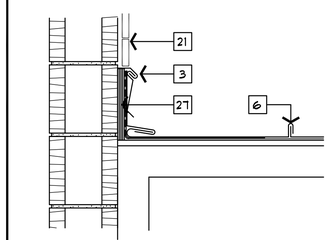

D A-6.1 **DETAIL** SCALE 1-1/2" =1'-0"

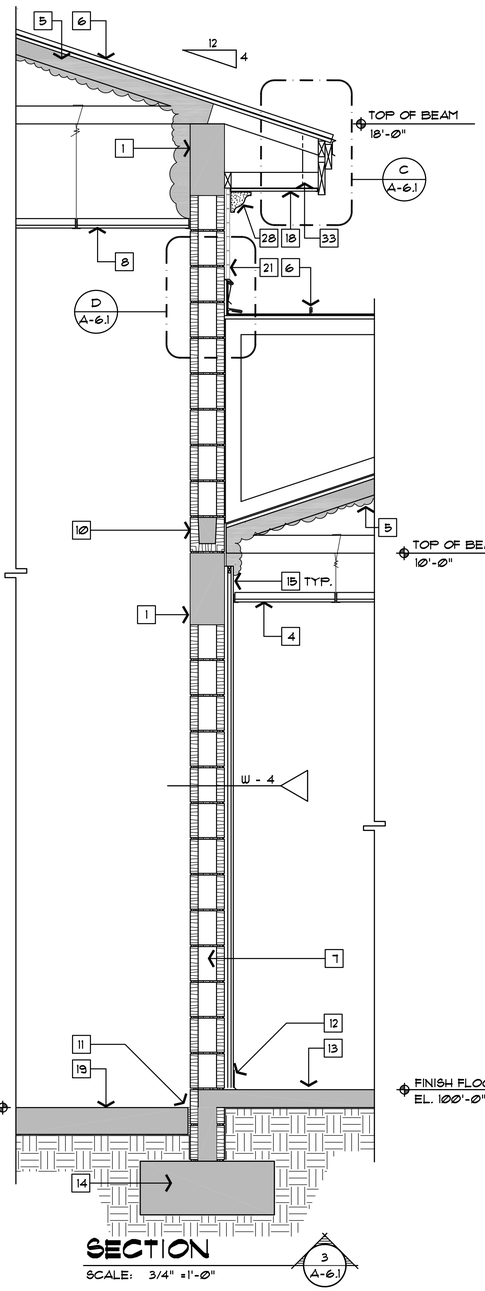

SECTION SCALE: 3/4" =1'-0" 3 A-6.1

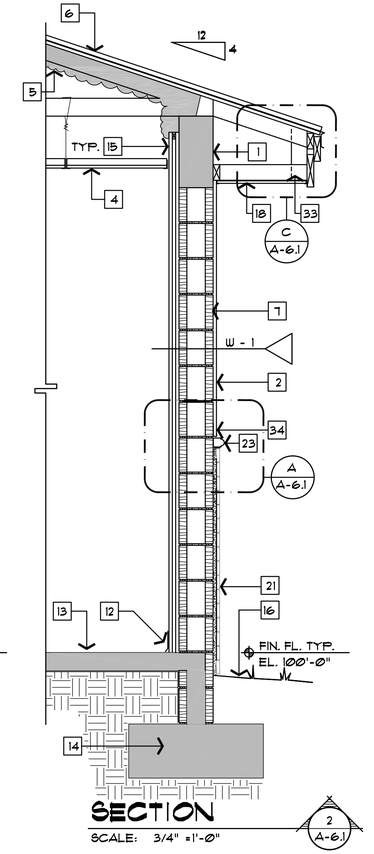

SECTION SCALE: 3/4" =1'-0" 2 A-6.1

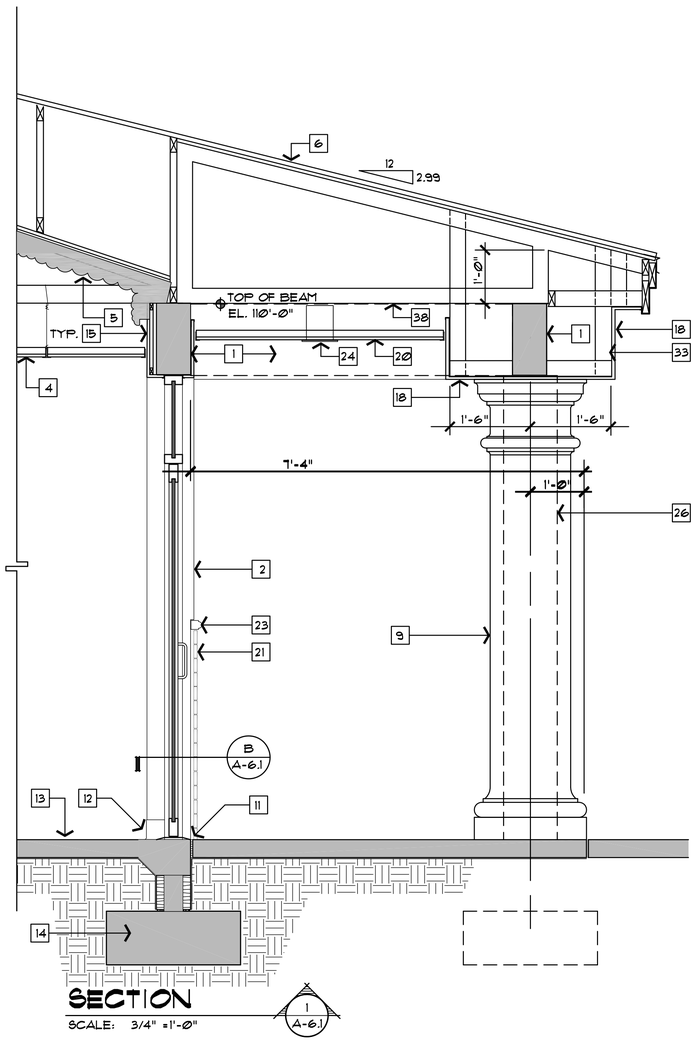

SECTION SCALE: 3/4" =1'-0" 1 A-6.1

GENERAL NOTES

KEY NOTES

1 CONC. TIE BEAM - SEE STRUCT. DWGS.
2 3/4" CEMENT PLASTER FINISH
3 ALUM. COUNTER FLASHING SIMILAR TO FRY REGLET TYPE ST STUCCO REGLET
4 ACCOUSTICAL SUSPENDED CLG.
5 6" FOAM SPRAY INSULATION
6 1-1/2" STANDING SEAM METAL ROOF ON 60 MIL SELF ADHESIVE MEMBRANE, ON 1/2" EXTERIOR GRADE PLYWOOD, ON PRE-ENGINEERED WOOD TRUSSES
7 8" CMU - PROVIDE HORIZ. TRUSS TYPE REINF. AT 16" O.C. , START POINT SHALL BE FINISH FLOOR. SEE STRUCT. DWGS. FOR VERT. REINF. PROVIDE HORIZ. REINF. WITH COMPOSITE HOOK AND FINTEL EYE VENEER REINF. AT 16" O.C. - AT ALL VENEER LOCATIONS
8 5/8" EXT. GRADE GYPSUM BOARD ON SUSPENDED SYSTEM
9 18" FIBERGLASS TUSCAN COLUMN WITH 24" SQ. CAPITAL AND BASE
10 PRECAST LINTEL. SEE STRUCT. DWGS.
11 1/2" EXPANSION JOINT MATERAL
12 4" VINYL BASE
13 4" CONC. SLAB ON 6 MIL. VISQUEEN, ON COMPACTED TERMITE TREATED SOIL
14 CONC. FOOTING. SEE STRUCT. DWGS.
15 EXTEND GYP. BD. 8" ABOVE CLG. TYP. WITH 1 x 2 DRAFT STOP CONTINOUS
16 FINISH GRADE
17 NOT USED
18 3/4" CEMENT PLASTER CEILING ON 3/8" PAPER BACKED RIBLATH ATTACHED DIRECTLY TO WOOD TRUSSES AND WOOD FRAMING AT 24" O. C.
19 6" CONC. SLAB ON 6 MIL. VISQUEEN, ON COMPACTED TERMITE TREATED SOIL
20 3/4" CEMENT PLASTER CEILING ON 3/8" PAPERBACKED RIBLATH ON SUSPENDED SYSTEM
21 THIN SET, STONE VENEER
22 NOT USED
23 2" x 2" PRECAST WAINSCOT WITH BULLNOSE FACE W/ TOP @ 4'-0" A.F.F.
24 RECESSED LIGHT FIXTURE
25 CAULK CONTINUOUS
26 12" DIA. CONC. COLUMN - DASHED FOR CLARITY
27 3/4" EXTERIOR GRADE P.T. PLYWD. BASE
28 6" FOAM CROWN MOLDING - PAINTED
29 P.T. 2 x 8 WOOD FASCIA COMPONENT
30 P.T. 2 x 6 WOOD FASCIA COMPONENT
31 P.T. 2 x 4 WOOD SUBFASCIA
32 METAL DRIP TO MATCH STANDING SEAM METAL ROOF
33 P.T. 2 x 4 BOX FRAMING AT 24" O. C. ATTACHED TO TRUSS AND MASONRY
34 STUCCO 'J' STOP
35 NOT USED
36 CONC. FILLED CELL COVERING. ALUM. SHALL BE THE SAME THICKNESS AS THE METAL ROOFING CONTINUOUS. COLOR TO BE SELECTED FROM FULL RANGE OF COLORS.
37 PROVIDE ALUM. BREAK METAL FASCIA COVERING. ALUM. SHALL BE THE SAME THICKNESS AS THE METAL ROOFING CONTINUOUS. COLOR TO BE SELECTED FROM FULL RANGE OF COLORS.
38 COORDINATE FINAL BEARING HGT. WITH TRUSS MFGR. PLAN.
39 5/8" GYPSUM BOARD ON 3/4" FURRING CHANNELS OVER 3/4" RIGID INSULATION AND 8" CMU
40 PROVIDE 5/8" MOISTURE RESISTANT GYPSUM BOARD IN ALL RESTROOMS, JANITOR CLOSETS AND KITCHEN AREAS

WALL SECTIONS

CITY OF TAMPA
CONTRACT ADMINISTRATION DEPARTMENT
PLANNING AND DESIGN DIVISION
306 E. JACKSON STREET 4 NORTH
TAMPA, FLORIDA 33602
p: 813. 274. 8456 – f: 813. 274. 8080
url: www.tampagov.net

James E. Jackson, Jr. AIA, NOMA
City Architect
Edward D. Rice, AIA
Project Architect
Kevin L. Henika, AIA
Project Architect
Thomas A. Hester, Sr., AIA, NOMA
Project Architect

Kinsey C. Tillman
Drafting Technician
Jerry P. Sanders
Drafting Technician
Byron K. Thomas, LEED AP
Drafting Technician

MEP CONSULTANT
GRINER ENGINEERING, INC.
1628 1st AVENUE NORTH
ST. PETERSBURG, FL 33713

STRUCTURAL CONSULTANT
BILLER REINHART STRUCTURAL GROUP, INC.
4014 GUNN HWY. SUITE 248
TAMPA, FL 33713

CIVIL CONSULTANT
S M CIVIL LLC
12315 WYCLIFF PLACE
TAMPA, FL 33626

LANDSCAPE CONSULTANT
DAVID CONNER & ASSOCIATES
1508 W. SWANN AVENUE, SUITE 250
TAMPA, FL 33606

FIRE STATION 23
20770 TROUT CREEK DR.
TAMPA, FL 33647
TAMPA, FLORIDA

DPW FILE NUMBER

DPW NUMBER
17-C-00037

ISSUE DATE
JULY 28, 2017

DRAWN BY
KINSEY TILLMAN

REVISIONS

SEAL

SCALE: VARIES

SHEET NUMBER
A-6.1

X OF X

K:\CA\Planning & Design Division\Various\~James Jackson\FIRE\DPW\FIRE STATION 23 17-C-00037\CONSTR. DOCS\~fire 23 A-6.1 wall sect.dwg, 8/1/2017 8:57:58 AM, Adobe PDF (temporary).pc3

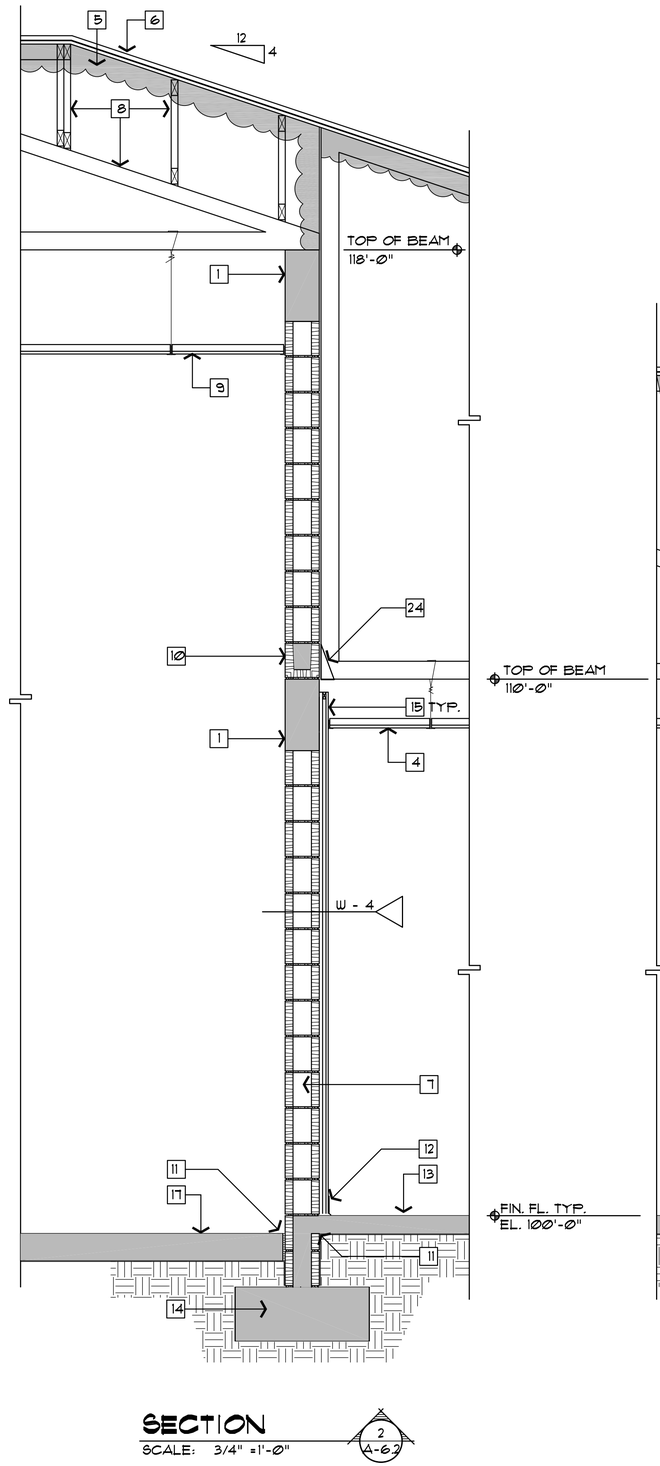

SECTION
SCALE: 3/4" =1'-0"
2 A-6.2

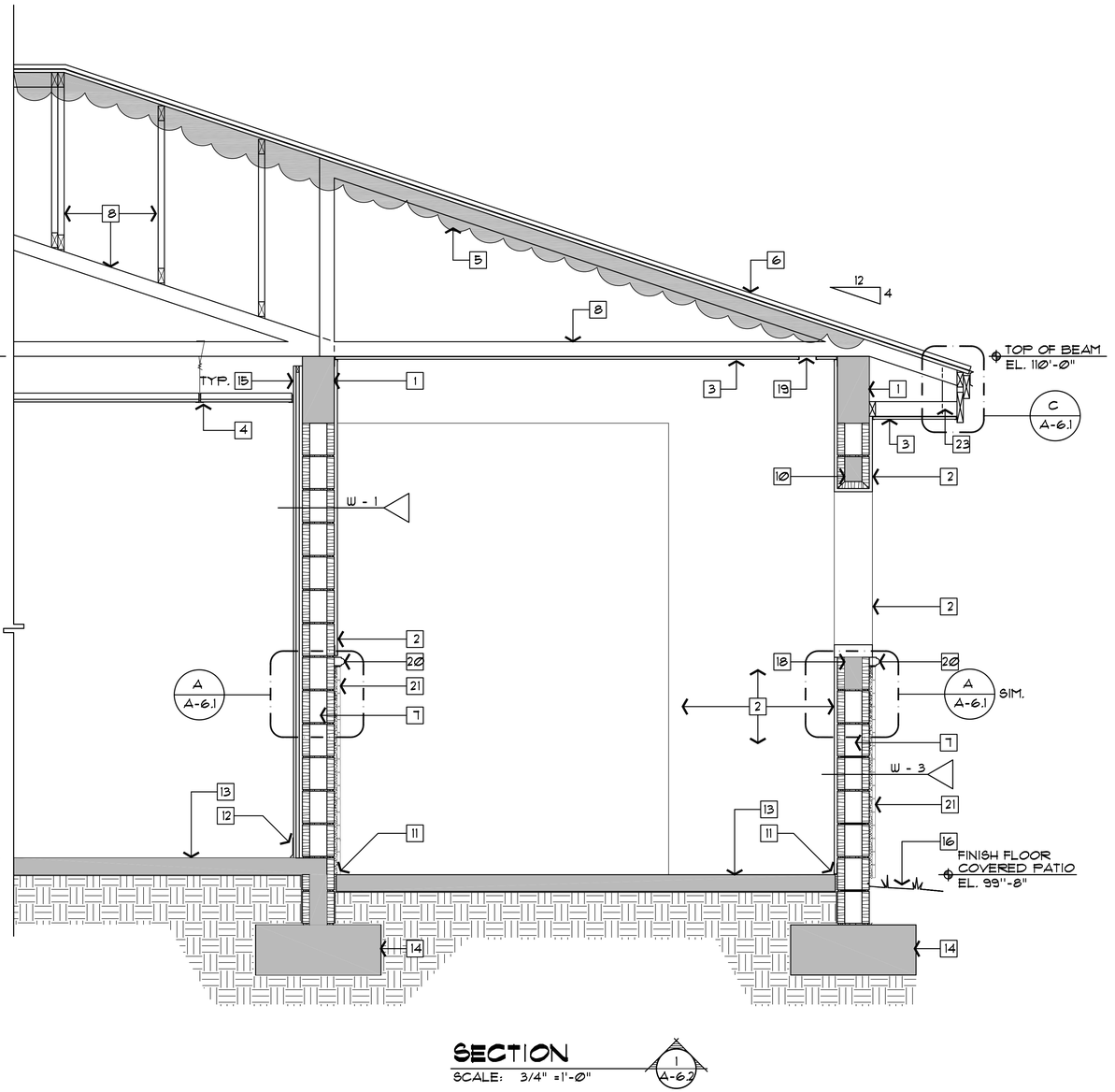

SECTION
SCALE: 3/4" =1'-0"
1 A-6.2

GENERAL NOTES

KEY NOTES

1 CONCRETE TIE BEAM - SEE STRUCTURAL DRAWINGS

2 3/4" CEMENT PLASTER FINISH

3 3/4" CEMENT PLASTER CEILING ON 3/8" PAPER BACKED RIB LATH ATTACHED DIRECTLY TO WOOD TRUSSES AND WOOD FRAMING

4 ACCOUSTICAL SUSPENDED CLG.

5 6" SPRAY FOAM INSULATION

6 1-1/2" STANDING SEAM METAL ROOF ON 60 MIL SELF ADHESIVE MEMBRANE, ON 1/2" EXTERIOR GRADE PLYWOOD, ON PRE-ENGINEERED WOOD TRUSSES

7 8" CMU - PROVIDE HORIZ. TRUSS TYPE REINF. AT 16" O.C., START POINT SHALL BE FIN. FLOOR SEE STRUCTURAL DWGS. FOR VERT. REINF.

8 PRE-ENGINEERED WOOD TRUSSES. SEE STRUCTURAL DWGS.

9 5/8" EXTERIOR GRADE GYPSUM BOARD ON SUSPENDED SYSTEM

10 CONT. KNOCKOUT BLOCK. SEE STRUCT. DWGS.

11 1/2" EXPANSION JOINT MATERAL

12 4" VINYL BASE

13 4" CONC. SLAB ON 6 MIL. VISQUEEN, ON COMPACTED TERMITE TREATED SOIL

14 CONC. FOOTING. SEE STRUCT. DWGS.

15 EXTEND GYP. BD. 8" ABOVE CLG. TYP. WITH 1 x 2P.T. DRAFT STOP CONTINUOUS

16 FINISH GRADE

17 6" CONC. SLAB ON 6 MIL. VISQUEEN, ON COMPACTED TERMITE TREATED SOIL

18 CONC. FILLED CELL - SEE STRUCT.

19 4" SOFFIT VENT CONT. SIM. TO FRY REGLET SOFFIT VENT PCS-75-V-400

20 2" x 2" PRECAST WAINSCOT WITH BULLNOSE FACE

21 THIN SET, STONE VENEER

22 NOT USED

23 P.T. 2 x 4 BOX FRAMING AT 24" O. C. ATTACH TO TRUSS AND MASONRY

24 TRUSS HANGER

WALL SECTIONS

CITY OF TAMPA
CONTRACT ADMINISTRATION DEPARTMENT
PLANNING AND DESIGN DIVISION
306 E. JACKSON STREET 4 NORTH
TAMPA, FLORIDA 33602
p. 813. 274. 8456 – f. 813. 274. 8080
url: www.tampagov.net

James E. Jackson, Jr. AIA, NOMA
City Architect
Edward D. Rice, AIA
Project Architect
Kevin L. Henika, AIA
Project Architect
Thomas A. Hester, Sr., AIA, NOMA
Project Architect

Kinsey C. Tillman
Drafting Technician
Jerry P. Sanders
Drafting Technician
Byron K. Thomas, LEED AP
Drafting Technician

MEP CONSULTANT
GRINER ENGINEERING, INC.
1628 1st AVENUE NORTH
ST. PETERSBURG, FL 33713

STRUCTURAL CONSULTANT
BILLER REINHART STRUCTURAL GROUP, INC.
4014 GUNN HWY. SUITE 248
TAMPA, FL 33713

CIVIL CONSULTANT
B M CIVIL LLC
12315 WYCLIFF PLACE
TAMPA, FL 33626

LANDSCAPE CONSULTANT
DAVID CONNER & ASSOCIATES
1509 W. SWANN AVENUE, SUITE 255
TAMPA, FL 33606

FIRE STATION 23
20770 TROUT CREEK DR.
TAMPA, FL 33647

DPW FILE NUMBER

DPW NUMBER
17-C-00037

ISSUE DATE
JULY 28, 2017

DRAWN BY
KINSEY TILLMAN

REVISIONS

SEAL

SCALE: 3/4" = 1'-0"

SHEET NUMBER
A-6.2

X OF X

K:\CAP\Barney & Design Division\Kinsey\~James Jackson\FIREDEPTFIRE STATION 23 17-C-00037\FIRE STATION 23 17-C-00037 comb docs\~fire 23 A-6.2 wall sect.dwg, 8/1/2017 9:00:03 AM, Adobe PDF (temporary).pc3

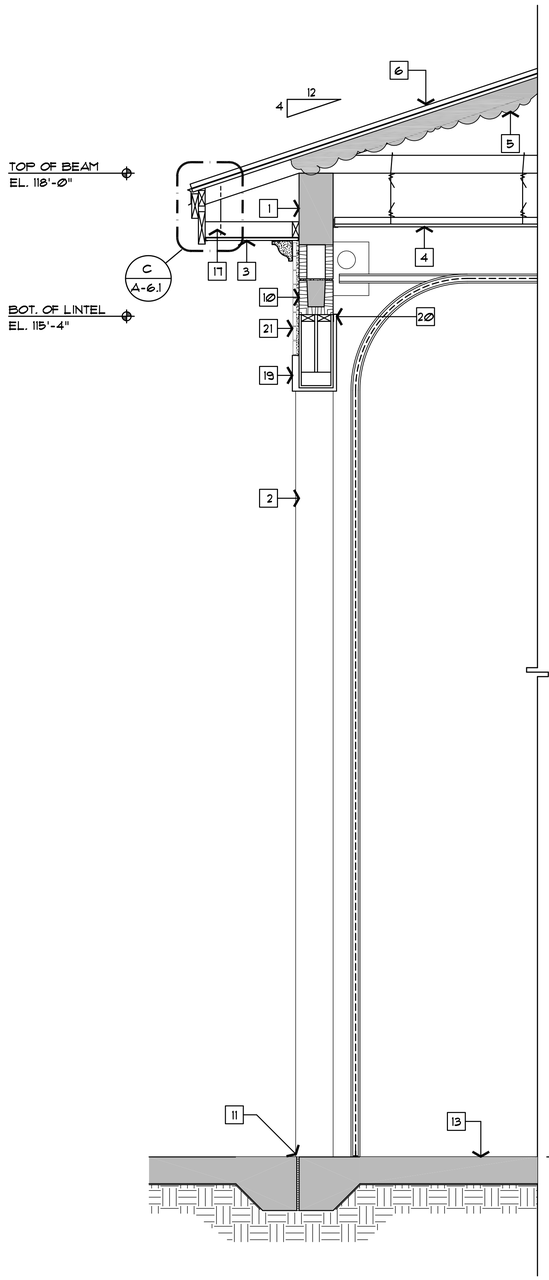

SECTION
SCALE: 3/4" =1'-Ø" 2 A-6.3

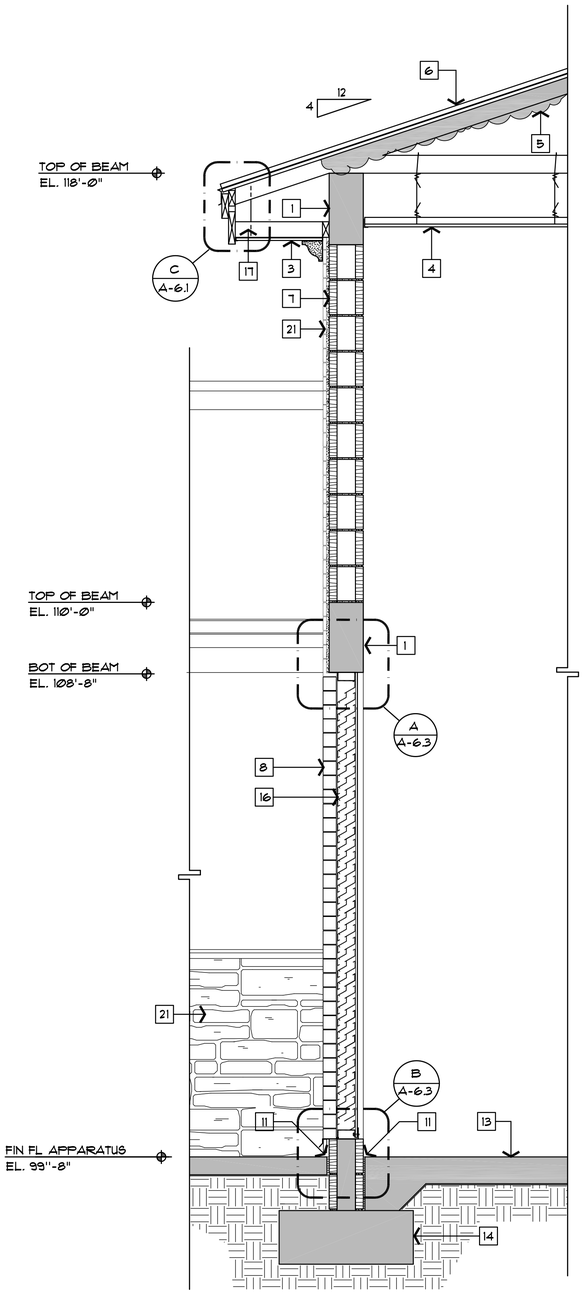

SECTION
SCALE: 3/4" =1'-Ø" 1 A-6.3

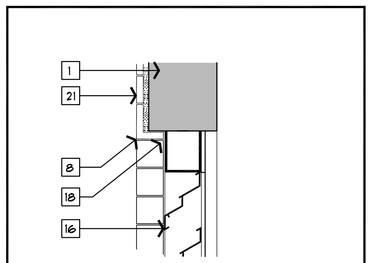

DETAIL
SCALE 1-1/2" =1'-Ø" A A-6.3

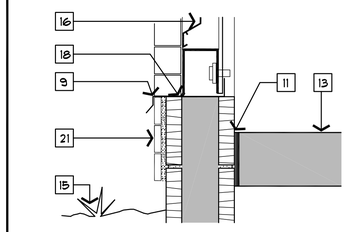

DETAIL
SCALE 1-1/2" =1'-Ø" B A-6.3

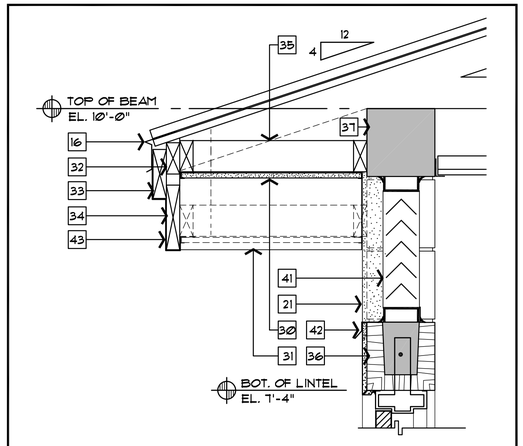

LOUVER DETAIL
SCALE: 1-1/2"=1'-Ø" AT LOUVER OVER DOORS 108 AND 125 C A-6.3

GENERAL NOTES

KEY NOTES

1 CONC. TIE BEAM - SEE STRUCT. DWGS.

2 3/4" CEMENT PLASTER FINISH WITH 'J' STOP AT EDGES

3 3/4" CEMENT PLASTER ON PAPERBACK RIBLATH ATTACHED DIRECTLY TO FRAMING.

4 5/8" EXTERIOR GRADE GYPSUM BOARD ON SUSPENDED SYSTEM

5 6" SPRAY FOAM INSULATION

6 1-1/2" STANDING SEAM METAL ROOF ON 60 MIL SELF ADHESIVE MEMBRANE, ON 1/2" EXTERIOR GRADE PLYWOOD, ON PRE-ENGINEERED WOOD TRUSSES

7 8" CMU - PROVIDE HORIZ. TRUSS TYPE REINF. AT 16" O.C. , START POINT SHALL BE FINISH FLOOR. SEE STRUCT. DWGS. FOR VERT. REINF. PROVIDE HORIZ. REINF. WITH COMPOSITE HOOK AND PINTEL EYE VENEER REINF. AT 16" O.C. - AT ALL VENEER LOCATIONS

8 PROVIDE THINSTONE CORNER UNITS TYP. ON ALL RETURNS

9 ALUM. BREAKMETAL FLASHING TO MATCH LOUVER

10 PRECAST LINTEL. SEE STRUCT. DWGS.

11 1/2" EXPANSION JOINT MATERAL

12 NOT USED

13 6" CONC. SLAB ON 6 MIL. VISQUEEN, ON COMPACTED TERMITE TREATED SOIL

14 CONC. FOOTING. SEE STRUCT. DWGS.

15 FINISH GRADE

16 LOUVER - SEE MECH. DWGS.

17 P.T. 2 x 4 BOX DOWN FRAMING AT 24" O. C. ATTACH TO TRUSS AND MASONRY

18 CAULK CONTINUOUS

19 3/4" CEMENT PLASTER ON METAL LATH OVER 15# FELT ON 1/2" CDX PLYWOOD ON P.T. 2 x 4 BOX DOWN FRAMING FOR ARCH. - SEE ELEVATIONS

20 EXTEND CEMENT PLASTER TO MASONRY STOP WITH 'J' STOP. PAINT

21 THIN SET, STONE VENEER

WALL SECTIONS

CITY OF TAMPA
CONTRACT ADMINISTRATION DEPARTMENT
PLANNING AND DESIGN DIVISION
306 E. JACKSON STREET 4 NORTH
TAMPA, FLORIDA 33602
p. 813. 274. 8456 – f. 813. 274. 8080
url: www.tampagov.net

James E. Jackson, Jr. AIA, NOMA
City Architect
Edward D. Rice, AIA
Project Architect
Kevin L. Henika, AIA
Project Architect
Thomas A. Hester, Sr., AIA, NOMA
Project Architect

Kinsey C. Tillman
Drafting Technician
Jerry P. Sanders
Drafting Technician
Byron K. Thomas, LEED AP
Drafting Technician

MEP CONSULTANT
GRINER ENGINEERING, INC.
1628 1st AVENUE NORTH
ST. PETERSBURG, FL 33713

STRUCTURAL CONSULTANT
BILLER REINHART STRUCTURAL GROUP, INC.
4014 GUNN HWY. SUITE 248
TAMPA,FL 33713

CIVIL CONSULTANT
B M CIVIL LLC
12315 WYCLIFF PLACE
TAMPA, FL 33626

LANDSCAPE CONSULTANT
DAVID CONNER & ASSOCIATES
1509 W. SWANN AVENUE, SUITE 255
TAMPA, FL 33606

FIRE STATION 23
20770 TROUT CREEK DR.
TAMPA, FL 33647
TAMPA, FLORIDA

DPW FILE NUMBER

DPW NUMBER
FD0116

ISSUE DATE
JULY 28, 2017

DRAWN BY
KINSEY TILLMAN

REVISIONS

SEAL

SCALE: VARIES

SHEET NUMBER
A-6.3

X OF X

K:\CA\Banning & Design Division\Jamey\~James Jackson\FIRE\DEPT\FIRE STATION 23 17-C-00037\FIRE STATION 23 17-C-00037 constr. docs\~fire 23 A-6.3 wall sect.dwg, 8/1/2017 9:01:42 AM, Adobe PDF (temporary).pc3

TOILET ACCESSORIES

T1	DOUBLE ROLL SURFACE MOUNTED TOILET TISSUE DISPENSER SIMILAR TO BRADLEY #5234.
T2	SOAP DISPENSER SIMILAR TO BRADLEY #6324.
T3	2' x 3' CHANNEL FRAMED MIRROR SIMILAR TO BRADLEY #181.
T4	2' x 3' FIXED TILT FRAMED MIRROR SIMILAR TO BRADLEY #140.
T5	SURFACE MOUNTED SOAP DISPENSER SIMILAR TO BRADLEY #6542.
T6	4' x 3' CHANNEL FRAMED MIRROR SIMILAR TO BRADLEY #181.
T7	PAPER TOWEL DISPENSER / RECEPTACLE SIM. TO BOBRICK MODEL #B-3942
T8	GRAB BARS - SIMILAR TO BRADLEY 800-001 SERIES WITH 54" BAR AT SIDE OF WATER CLOSET.
T9	GRAB BAR SIMILAR TO BRADLEY 800-001 SERIES 36" IN LENGHT.
T10	CLOTHES HOOK STRIP SIMILAR TO BOBRICK B-985
T11	EXTRA HEAVY DUTY SHOWER CURTAIN ROD SIM. TO BOBRICK B-6047 WITH VINYL SHOWER CURTAIN SIM. TO BOBRICK 204-2 AND SHOWER CURTAIN HOOKS SIM. TO BOBRICK 204-1

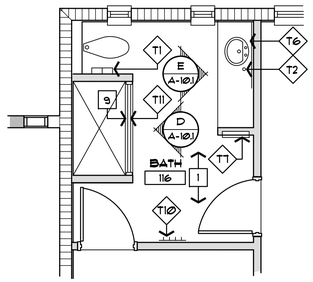

C A-7.1 **ENLARGED FLOOR PLAN**
SCALE 1/4" = 1'-0"

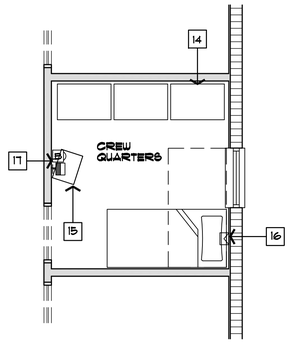

D A-7.1 **PARTIAL ENLARGED FLOOR PLAN**
SCALE 1/4" = 1'-0"

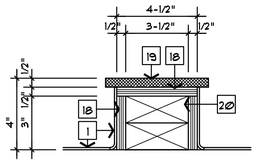

TYPICAL CURB DETAIL
SCALE 3" = 1'-0"

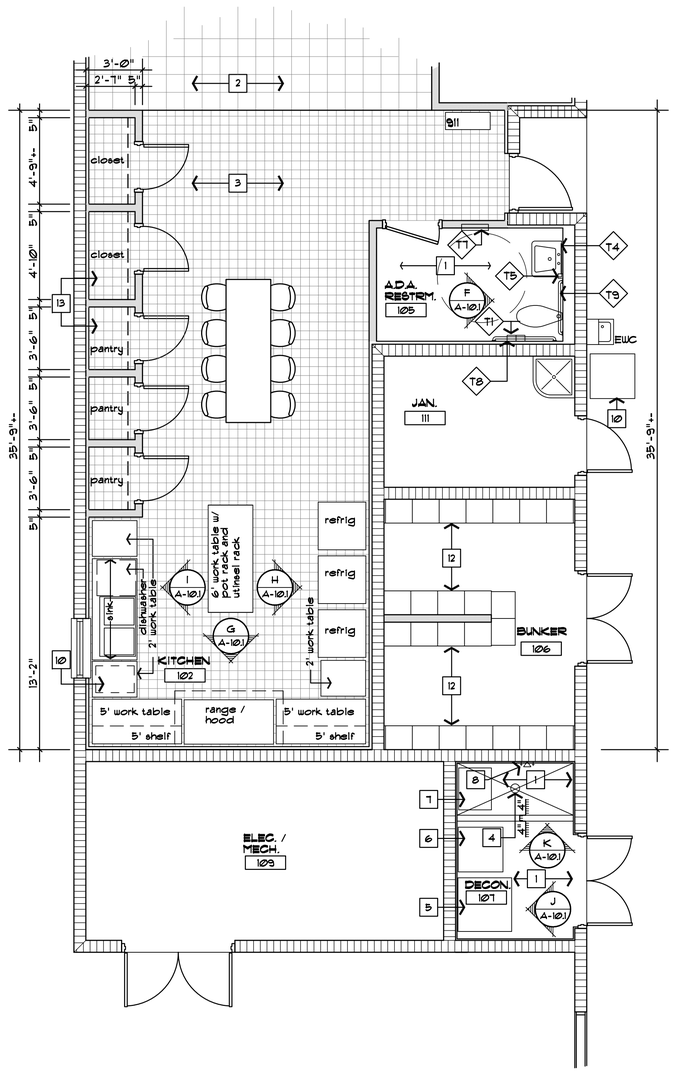

A A-7.1 **ENLARGED FLOOR PLAN**
SCALE 1/4" = 1'-0"

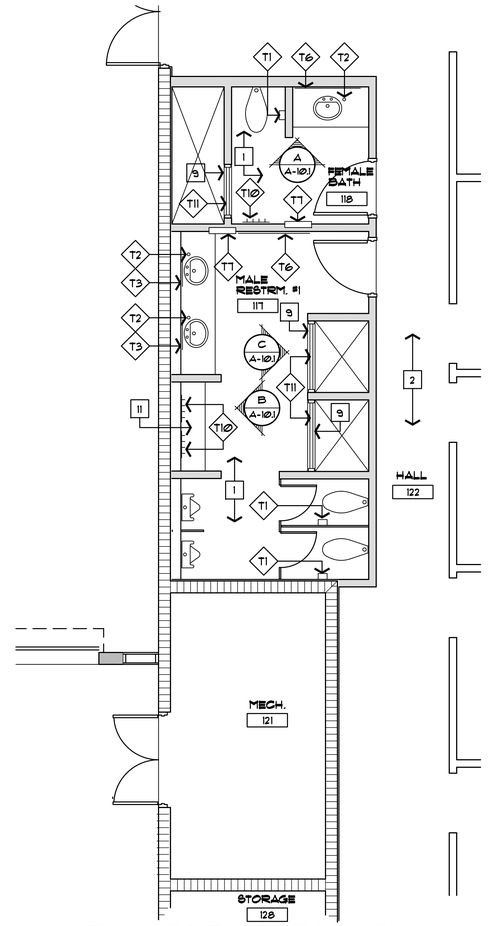

B A-7.1 **ENLARGED FLOOR PLAN**
SCALE 1/4" = 1'-0"

C A-7.1 **ENLARGED FLOOR PLAN**
SCALE 1/4" = 1'-0"

GENERAL NOTES

KEY NOTES

1	2" x 2" MOSAIC FLOOR TILE.
2	12" x 12" VCT ACCENT COLOR TILE.
3	6" x 6" QUARRY TILE
4	FLOOR DRAIN - SLOPE FLOOR TO DRAIN.
5	COMMERCIAL HEAVY DUTY WASHING MACHINE
6	HEAVY DUTY DRYER
7	FIBERGLASS SINK WITH HANDS FREE CONTROLS
8	HAND HELD SHOWER
9	4" CURB
10	ICE MACHINE
11	1-1/2" THICK x 60" LONG SOLID SURFACE BENCH
12	18"Wx21"Dx72"H SOLID WOOD LAMINATE WITH BOTTOM FOOT LOCKER AND TOP LOCK BOX SIMILAR TO THE 30,000 SERIES OPEN ACCESS DESIGNER WOOD LOCKER BY SALSBURG INDUSTRIES COLOR SELECTED FROM STANDARD RANGE. WWW.LOCKERS.COM 1 800 562-5377 EXTENSION 728, MIKE
13	PROVIDE 6 HEAVY DUTY WIRE SHELVES ON HEAVY DUTY BRACKETS FOR EACH CLOSET AND PANTRY TYP.
14	FOR EACH CREW ROOM AND CHIEF AND CAPTAIN QUARTERS PROVIDE 3 SOLID 24" x 24" x 72" WOOD LOCKER WITH BOTTOM FOOT LOCKER, TOP TRAY LOCKER AND LOCKER DOOR, ALL DOORS WITH STANDARD HASP LOCK, SIMILAR TO 30014 DESIGNER GREAT LOCKER BY SALSBURG INDUSTRIES. WWW.LOCKERS.COM 1 800 562-5377 EXTENSION 728 MIKE
15	WALL MOUNTED TV BRACKETS - 65" AFF FIELD VERIFY) NOT IN CONTRACT - TO BE INSTALLED BY CITY OF TAMPA
16	RELOCATE STROBE FIXTURE TO EXTERIOR WALL TYP. ALL SLEEPING ROOMS REFER TO ELEC. DWGS. FOR MOUNTING HEIGHTS
17	911 BELL AND INTERCOM REMOTE STATION AT 58" AFF. (FIELD VERIFY)
18	1/2" CEM. BD. - SIM. TO DUROROCK
19	1/2" x 5" WIDE TRAVERTINE / MARLE
20	P.T. 2x4 CONTINUOUS

ENLARGED FLOOR PLAN

CITY OF TAMPA
CONTRACT ADMINISTRATION DEPARTMENT
PLANNING AND DESIGN DIVISION
306 E. JACKSON STREET 4 NORTH
TAMPA, FLORIDA 33602
p. 813. 274. 8456 - f. 813. 274. 8080
url: www.tampagov.net

James E. Jackson, Jr. AIA, NOMA
City Architect
Edward D. Rice, AIA
Project Architect
Kevin L. Henika, AIA
Project Architect
Thomas A. Hester, Sr., AIA, NOMA
Project Architect

Kinsey C. Tillman
Drafting Technician
Jerry P. Sanders
Drafting Technician
Byron K. Thomas, LEED AP
Drafting Technician

MEP CONSULTANT
GRINER ENGINEERING, INC.
1628 1st. AVENUE NORTH
ST. PETERSBURG, FL 33713

STRUCTURAL CONSULTANT
BILLER REINHART
STRUCTURAL GROUP, INC.
4014 GUNN HWY. SUITE 248
TAMPA, FL 33713

CIVIL CONSULTANT
5 M CIVIL LLC
12315 WYCLIFF PLACE
TAMPA, FL 33626

LANDSCAPE CONSULTANT
DAVID CONNER & ASSOCIATES
1509 W. SWANN AVENUE,SUITE 255
TAMPA, FL 33606

FIRE STATION 23
20770 TROUT CREEK DR.
TAMPA,FL 33647

DPW FILE NUMBER

DPW NUMBER
17-C-00037

ISSUE DATE
JULY 28, 2017

DRAWN BY
KINSEY TILLMAN

REVISIONS

SEAL

SCALE: 1/4" = 1'-0"

SHEET NUMBER
A-7.1

X OF X

K:\CA\Planning & Design Division\Kinsey\-James Jackson\FIREDEPT\FIRE STATION 23 17-C-00037\FIRE STATION 23 17-C-00037 constr. docs\-fire 23 A-7.1 enlarge flr plan-4-24-17.dwg, 8/1/2017 9:03:46 AM, Adobe PDF (temporary).pc3

DOOR SCHEDULE

NO.	EL.	DOOR W	DOOR H	DOOR T	DOOR MATERIAL	FRAME TYP.	FRAME MAT'L	DETAILS HEAD	DETAILS JAMB	DETAILS SILL	FIRE RATED	REMARKS
100	C	2'-3"-Ø"	7'-Ø"	1-3/4"	ALUM.	-	ALUM.	-	-	4	-	
101	F	3'-Ø"	7'-Ø"	1-3/4"	H. M.	1	H. M.	5	5	-	-	
102	F	3'-Ø"	7'-Ø"	1-3/4"	H. M.	1	H. M.	5	5	-	-	
103	A	3'-Ø"	7'-Ø"	1-3/4"	H. M.	1	H. M.	5	5	-	-	
104	F	3'-Ø"	7'-Ø"	1-3/4"	H. M.	1	H. M.	1	1	3	3/4 c	SELF CLOSING DEVICE, PANIC BAR
105	A	3'-Ø"	7'-Ø"	1-3/4"	H. M.	1	H. M.	1	1	3	3/4 c	SELF CLOSING DEVICE
106	B	2'-3"-Ø"	7'-Ø"	1-3/4"	H. M.	2	H. M.	1	1	3	3/4 c	SELF CLOSING DEVICE
107	B	2'-3"-Ø"	7'-Ø"	1-3/4"	H. M.	2	H. M.	1	1	3	3/4 c	SELF CLOSING DEVICE
108	B	2'-3"-Ø"	7'-Ø"	1-3/4"	H. M.	2	H. M.	1	1	3	-	SELF CLOSING DEVICE
NOT USED												
110	A	2'-6"	7'-Ø"	1-3/4"	H. M.	1	H. M.	5	5	-	-	SELF CLOSING DEVICE
111	A	2'-6"	7'-Ø"	1-3/4"	H.M.	1	H. M.	5	5	-	-	SELF CLOSING DEVICE
112	A	2'-6"	7'-Ø"	1-3/4"	H.M.	1	H. M.	5	5	-	-	SELF CLOSING DEVICE
113	A	2'-6"	7'-Ø"	1-3/4"	H.M.	1	H. M.	5	5	-	-	SELF CLOSING DEVICE
114	A	2'-6"	7'-Ø"	1-3/4"	H.M.	1	H. M.	5	5	-	-	SELF CLOSING DEVICE
115	F	3'-Ø"	7'-Ø"	1-3/4"	H.M.	1	H. M.	1	-	3	-	SELF CLOSING DEVICE
116	G	2'-3"-Ø"	7'-Ø"	1-3/4"	H. M.	2	H. M.	1	1	3	3/4 c	SELF CLOSING DEVICE, PANIC BAR
117	A	3'-Ø"	7'-Ø"	1-3/4"	WD. SOLID CORE	1	H. M.	5	5	-	-	SELF CLOSING DEVICE
118	A	3'-Ø"	7'-Ø"	1-3/4"	WD. SOLID CORE	1	H. M.	5	5	-		
119	A	3'-Ø"	7'-Ø"	1-3/4"	WD. SOLID CORE	1	H. M.	5	5	-		
120	A	3'-Ø"	7'-Ø"	1-3/4"	WD. SOLID CORE	1	H. M.	5	5	-		
121	A	3'-Ø"	7'-Ø"	1-3/4"	WD. SOLID CORE	1	H. M.	5	5	-		
122	A	3'-Ø"	7'-Ø"	1-3/4"	WD. SOLID CORE	1	H. M.	5	5	-	-	
123	A	3'-Ø"	7'-Ø"	1-3/4"	WD. SOLID CORE	1	H. M.	5	5	-	-	
124	F	3'-Ø"	7'-Ø"	1-3/4"	H. M.	1	H. M.	1	1	3	-	
125	B	2'-3"-Ø"	7'-Ø"	1-3/4"	H. M.	2	H. M.	1	1	3		
126	-	3'-Ø"	7'-Ø"		CURTAIN	1	WOOD	-	-	-		
127	-	3'-Ø"	7'-Ø"		CURTAIN	1	WOOD	-	-	-		
128	-	3'-Ø"	7'-Ø"		CURTAIN	1	WOOD	-	-	-		
129	-	3'-Ø"	7'-Ø"		CURTAIN	1	WOOD	-	-	-		
130	-	3'-Ø"	7'-Ø"		CURTAIN	1	WOOD	-	-	-		
131	-	3'-Ø"	7'-Ø"		CURTAIN	1	WOOD	-	-	-		
132	NOT USED											NOT USED
133	E	14'-Ø"	16'-Ø"	-	O/H SERVICE	-	STL.	-	-	-		ELECTRIC MOTOR OPERATED W/ PULL CHAIN MANUAL
134	E	14'-Ø"	16'-Ø"	-	O/H SERVICE	-	STL.	-	-	-		ELECTRIC MOTOR OPERATED W/ PULL CHAIN MANUAL
135	E	14'-Ø"	16'-Ø"		O/H SERVICE	-	STL.	-	-	-		ELECTRIC MOTOR OPERATED W/ PULL CHAIN MANUAL
136	E	14'-Ø"	16'-Ø"		O/H SERVICE	-	STL.	-	-	-		ELECTRIC MOTOR OPERATED W/ PULL CHAIN MANUAL
137	E	14'-Ø"	16'-Ø"		O/H SERVICE	-	STL.	-	-	-		ELECTRIC MOTOR OPERATED W/ PULL CHAIN MANUAL
138	E	14'-Ø"	16'-Ø"		O/H SERVICE	-	STL.	-	-	-		ELECTRIC MOTOR OPERATED W/ PULL CHAIN MANUAL
139	B	2'-3"-Ø"	7'-Ø"	1-3/4"	H. M.	2	H. M.	1	1	3		
140	B	2'-3"-Ø"	7'-Ø"	1-3/4"	H. M.	2	H. M.	1	1	3		
141	B	2'-3"-Ø"	7'-Ø"	1-3/4"	WD. SOLID CORE	2	H. M.	5	5	-		
142	F	3'-Ø"	7'-Ø"	1-3/4"	H. M.	1	H. M.	1	1	3	-	
143	A	3'-Ø"	7'-Ø"	1-3/4"	WD. SOLID CORE	1	H. M.	5	5	-	-	
144	A	3'-Ø"	7'-Ø"	1-3/4"	WD. SOLID CORE	1	H. M.	5	5	-	-	
145	-	3'-Ø"	7'-Ø"		CURTAIN	1	WOOD	-	-	-		
146	-	3'-Ø"	7'-Ø"		CURTAIN	1	WOOD	-	-	-		

FINISH SCHEDULE

NO.	ROOM NAME	FLOOR	BASE	WALLS N	WALLS E	WALLS S	WALLS W	CLG.	CLG. HT.	REMARKS
100	ACTIVITY AREA	F1	B1	W1	W1	W1	W1	C1	9'-Ø"	
101	FOOD CLOSETS	F5	B1	W1	W1	W1	W1	C2	9'-Ø"	
102	KITCHEN	F5	B3	W3	W3	W3	W3	C1	9'-Ø"	
103	OFFICE	F1	B1	W1	W1	W1	W1	C1	9'-Ø"	
104	NITE ROOM	F1	B1	W1	W1	W1	W1	C1	9'-Ø"	
105	A. D. A. RESTROOM	F3	B2	W3	W3	W3	W3	C2	9'-Ø"	
106	BUNKER	F4	B1	W3	W3	W3	W3	C2	9'-Ø"	
107	DE-CON	F3	B2	W2	W2	W2	W2	C2	9'-Ø"	
108	NOT USED									NOT USED
109	ELEC. / MECH. ROOM	F4	B1	W3	W3	W3	W3	C2	9'-6"	2 LAYERS 5/8" G.B. , COORDINATE W/ MECH.
110	GENERATOR ROOM	F4	B1	W3	W3	W3	W3	C2	9'-Ø"	
111	JANITOR CLOSET	F4	B1	W3	W3	W3	W3	C2	9'-Ø"	
112	COVERED PATIO	F4	B1	W1	W1	W1	W1	-	10'-Ø"	CEMENT PLASTER CEILING
113	APPARATUS BAY	F4	B1	W3	W3	W3	W3	C2	17'-4"	
114	CHIEF'S QUARTERS	F1	B1	W1	W1	W1	W1	C1	9'-Ø"	
115	CAPTAIN'S QUARTERS	F1	B1	W1	W1	W1	W1	C1	9'-Ø"	
116	BATH	F3	B2	W3	W3	W3	W3	C2	9'-Ø"	CERAMIC TILE FULL HGT. IN SHOWERS
117	MALE RR #1	F3	B2	W3	W3	W3	W3	C2	9'-Ø"	CERAMIC TILE FULL HGT. IN SHOWERS
118	FEMALE BATH	F3	B2	W3	W3	W3	W3	C2	9'-Ø"	CERAMIC TILE FULL HGT. IN SHOWERS
119	JANITOR	F4	B1	W1	W1	W1	W1	C2	9'-Ø"	
120	CREW QUARTERS (1-8)	F1	B1	W1	W1	W1	W1	C1	9'-Ø"	VINYL COMPOSITION TILE IN HALL
121	MECH.	F4	B1	W1	W1	W1	W1	C2	9'-6"	2 LAYERS 5/8" G.B. , COORDINATE W/ MECH.
122	HALL	F1	B1	W1	W1	W1	W1	C1	9'-Ø"	
123	MEN A. D. A. RESTROOM	F3	B2	W3	W3	W3	W3	C2	9'-Ø"	
124	WOMEN A. D. A. RESTROOM	F3	B2	W3	W3	W3	W3	C2	9'-Ø"	
125	HALL	F1	B1	W1	W1	W1	W1	C1	9'-Ø"	
126	MECHANICAL	F4	B1	W3	W3	W3	W3	C2	9'-Ø"	
127	TRAINING	F1	B1	W1	W1	W1	W1	C1	9'-Ø"	
128	STORAGE	F4	B1	W3	W3	W3	W3	C2	9'-6"	2 LAYERS 5/8" G.B. , COORDINATE W/ MECH.

FINISH LEGEND

W1	PAINTED	F1	VINYL COMPOSITION TILE (VCT)	C1	SUSPENDED ACOUSTICAL CEILING	B1	VINYL BASE
W2	CERAMIC TILE	F2	CARPET	C2	SUSPENDED GYPSUM CEILING	B2	CERAMIC TILE BASE
W3	EPOXY PAINT	F3	2 x 2 CERAMIC TILE	C3	CEMENT PLASTER CEILING	B3	QUARRY TILE BASE
		F4	SEALED CONCRETE				
		F5	6 x 6 QUARRY TILE				

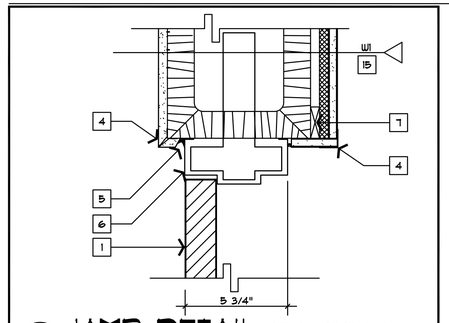

1 JAMB DETAIL (HEAD SIMILAR)
SCALE: 3" = 1'-Ø"

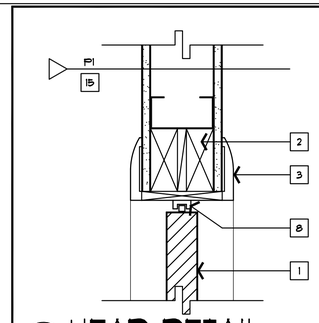

2 HEAD DETAIL
SCALE: 3" = 1'-Ø"

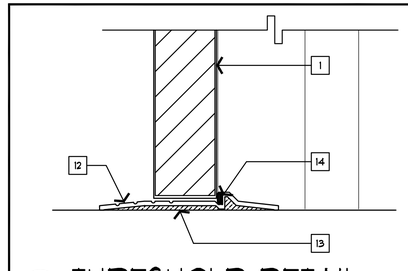

3 THRESHOLD DETAIL
SCALE: 6" = 1'-Ø"

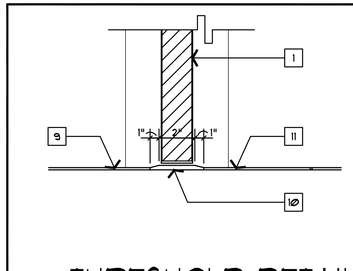

4 THRESHOLD DETAIL
SCALE: 3" = 1'-Ø"

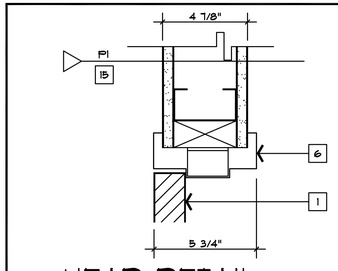

5 HEAD DETAIL (JAMB SIMILAR)
SCALE: 3" = 1'-Ø"

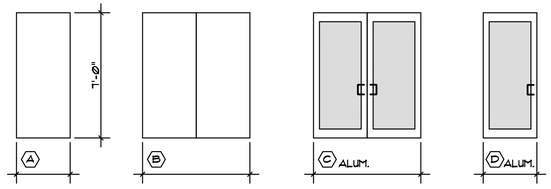

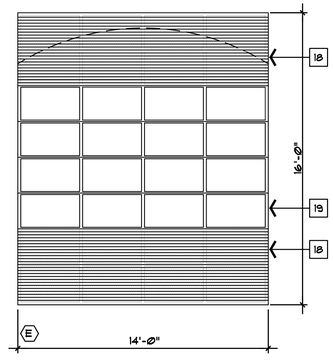

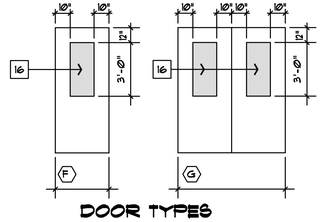

DOOR TYPES

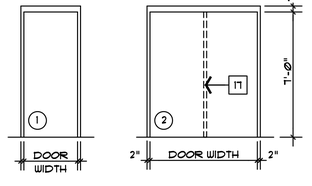

FRAME TYPES

GENERAL NOTES

KEY NOTES

1. DOOR SEE SCHEDULE.
2. 2- 2 x 4 HEADER W/PLYWOOD INFILL.
3. CASING.
4. CORNER BEAD.
5. SEALANT.
6. HOLLOW METAL FRAME PROVIDE G90 GALV. AT ALL EXTERIOR FRAMES.
7. PROVIDE 1 x 2 PT AT ALL CORNERS TYPICAL
8. BI-FOLD TRACK.
9. FLOOR - SEE SCHEDULE.
10. MARBLE THRESHOLD.
11. CERAMIC TILE.
12. ALUMINUM SADDLE.
13. CONTINUOUS BED OF SEALANT.
14. VINYL INSERT.
15. SEE FLOOR PLAN FOR OTHER WALL TYPES FOR VARIOUS LOCATIONS.
16. 1/4" TEMPERED WIRE GLASS
17. ASTRAGAL
18. TWO PANEL HIGH DEEP RIBBED 2" THICK ROLL FORMED 20 GA. PANEL PRE-FINISHED COLOR SELECTED FROM MANUFACTURE STANDARD COLORS
19. FOUR PANEL HIGH 1/2" THICK INSULATED GLASS

SCHEDULES / DETAILS

CITY OF TAMPA
CONTRACT ADMINISTRATION DEPARTMENT
PLANNING AND DESIGN DIVISION
306 E. JACKSON STREET 4 NORTH
TAMPA, FLORIDA 33602
p. 813. 274. 8456 – f. 813. 274. 8080
url: www.tampagov.net

James E. Jackson, Jr. AIA, NOMA
City Architect
Edward D. Rice, AIA
Project Architect
Kevin L. Henika, AIA
Project Architect
Thomas A. Hester, Sr., AIA, NOMA
Project Architect

Kinsey C. Tillman
Drafting Technician
Jerry P. Sanders
Drafting Technician
Byron K. Thomas, LEED AP
Drafting Technician

MEP CONSULTANT
GRINER ENGINEERING, INC.
1628 1st. AVENUE NORTH
ST. PETERSBURG, FL 33713

STRUCTURAL CONSULTANT
BILLER REINHART STRUCTURAL GROUP,INC.
4014 GUNN HWY. SUITE 248
TAMPA, FL 33713

CIVIL CONSULTANT
5 M CIVIL LLC
12315 WYCLIFF PLACE
TAMPA, FL 33626

LANDSCAPE CONSULTANT
DAVID CONNER & ASSOCIATES
1509 W. SWANN AVENUE,SUITE 255
TAMPA, FL 33606

FIRE STATION 23
20770 TROUT CREEK DR.
TAMPA, FL 33647

DPW FILE NUMBER

DPW NUMBER
17-C-00037

ISSUE DATE
JULY 28, 2017

DRAWN BY
KINSEY TILLMAN

REVISIONS

SEAL

SCALE: VARIES

SHEET NUMBER
A-8.1

X OF X

K:\CA\Planning & Design Division\Kinsey\~James Jackson\FIRE\DEPT\FIRE STATION 23 17-C-00037\FIRE STATION 23 17-C-00037 constr. docs\~fire 23 A-8.1 sched&det.dwg, 8/1/2017 1:05:35 AM, Adobe PDF (temporary).pc3

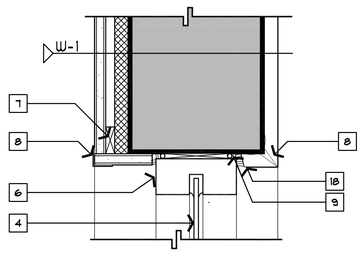

1 A-9.1 **JAMB DETAIL** (HEAD SIMILAR)
SCALE: 3" = 1'-Ø"

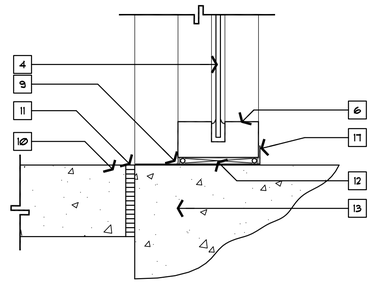

2 A-9.1 **SILL DETAIL**
SCALE: 3" = 1'-Ø"

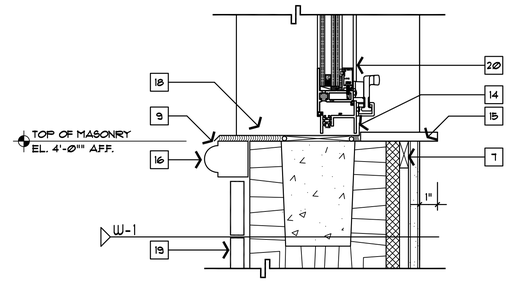

3 A-9.1 **SILL DETAIL**
SCALE: 3" = 1'-Ø"

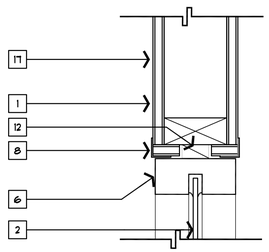

4 A-9.1 **JAMB DETAIL** (HEAD SIMILAR)
SCALE: 3" = 1'-Ø"

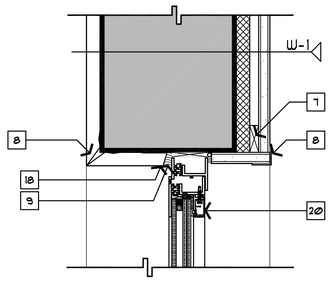

5 A-9.1 **JAMB DETAIL** (HEAD SIMILAR)
SCALE: 3" = 1'-Ø"

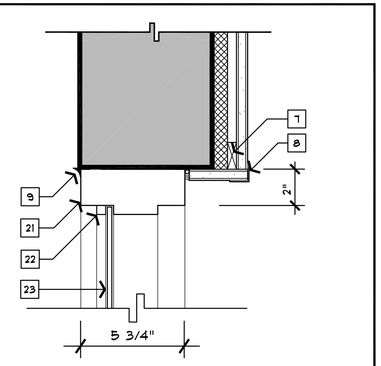

6 A-9.1 **JAMB DETAIL** (HEAD SIMILAR)
SCALE: 1-1/2" = 1'-Ø"

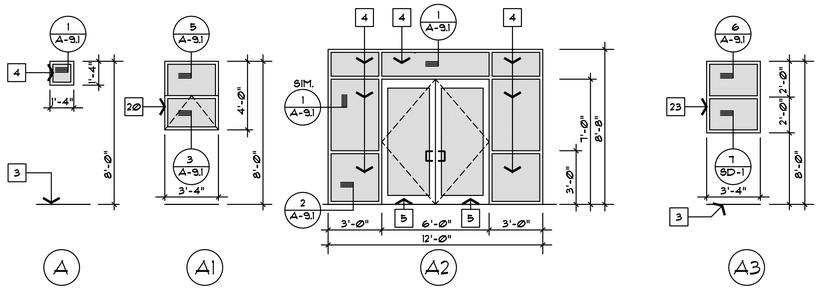

STOREFRONT /WINDOW TYPES

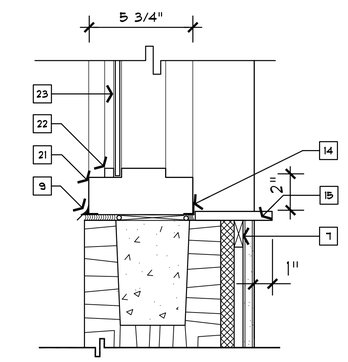

7 A-9.1 **SILL DETAIL**
SCALE: 1-1/2" = 1'-Ø"

GENERAL NOTES

1. ALL WINDOWS HAVE IMPACT RATED GLASS AND FRAME

KEY NOTES

1	5/8" GWB ON 3-5/8" METAL STUDS
2	1/4" CLEAR TEMPERED GLASS
3	FINISH FLOOR
4	1-5/16" TINTED TEMPERED GLASS
5	MEDIUM STYLE STOREFRONT DOOR WITH 1-5/16" TEMPERED GLASS
6	ALUMINUM STOREFRONT
7	P. T. 1 x 2 BLOCKING AT ALL CORNERS. TYP.
8	CORNER BEAD
9	CAULK CONTINUOUS
10	CONC. SIDEWALK - SEE PLAN FOR LOCATION AND PATTERN
11	EXPANSION JOINT, FILL WITH EXPANSION JOINT MATERIAL
12	SHIM (AS REQUIRED)
13	NOT USED
14	ALUMINUM BREAKMETAL FLASHING TO MATCH STOREFRONT
15	MARBLE STOOL
16	2" x 2" PRECAST WAINSCOT W/ BULLNOSE FACE SET IN FULL BED OF MORTAR
17	SEE PLAN FOR PARTITION TYPE
18	"J" STOP
19	THIN SET STONE VENEER
20	FIXED TOP PROJECTED BOTTOM ALUM. WINDOW WITH 1-5/16" GLASS
21	HOLLOW METAL FRAME PAINTED
22	CONTINUOUS STOP, MECHANICALLY FASTENED TO METAL FRAME
23	1/4" WIRE GLASS (CLEAR)

STOREFRONT

CITY OF TAMPA
CONTRACT ADMINISTRATION DEPARTMENT
PLANNING AND DESIGN DIVISION
306 E. JACKSON STREET 4 NORTH
TAMPA, FLORIDA 33602
p. 813. 274. 8456 – f. 813. 274. 8080
url: www.tampagov.net

James E. Jackson, Jr. AIA, NOMA
City Architect
Edward D. Rice, AIA
Project Architect
Kevin L. Henika, AIA
Project Architect
Thomas A. Hester, Sr., AIA, NOMA
Project Architect

Kinsey C. Tillman
Drafting Technician
Jerry P. Sanders
Drafting Technician
Byron K. Thomas, LEED AP
Drafting Technician

MEP CONSULTANT
GRINER ENGINEERING, INC.
1628 1st. AVENUE NORTH
ST. PETERSBURG, FL 33713

STRUCTURAL CONSULTANT
BILLER REINHART
STRUCTURAL GROUP, INC.
4014 GUNN HWY. SUITE 248
TAMPA, FL 33713

CIVIL CONSULTANT
5 M CIVIL LLC
12315 WYCLIFF PLACE
TAMPA, FL 33626

LANDSCAPE CONSULTANT
DAVID CONNER & ASSOCIATES
1509 W. SWANN AVENUE,SUITE 255
TAMPA, FL 33606

FIRE STATION 23
20770 TROUT CREEK DR.
TAMPA, FL 33647

DPW FILE NUMBER

DPW NUMBER
17-C-00037

ISSUE DATE
JULY 28, 2017

DRAWN BY
KINSEY TILLMAN

REVISIONS

SEAL

SCALE: VARIES

SHEET NUMBER
A-9.1

X OF X

K:\CA\Planning & Design Division\Kinsey\~James Jackson\FIRE\DEPT\FIRE STATION 23 17-C-00037\ contr. docs\~Rev 23 A-9.1 storefront.dwg, 8/1/2017 9:07:45 AM, Adobe PDF (temporary).pc3

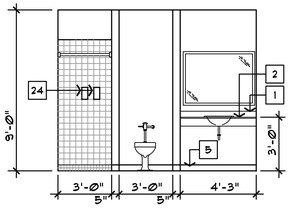

BATH 118 ELEVATION

SCALE 1/4" = 1'-0"

A A-10.1

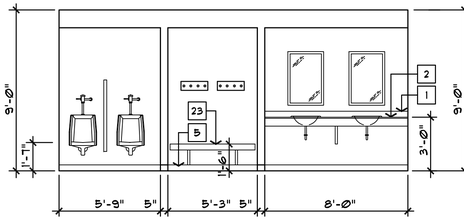

RESTROOM #1 ELEVATION

SCALE 1/4" = 1'-0"

B A-10.1

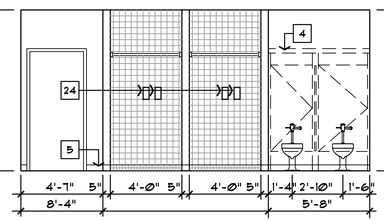

RESTROOM #1 ELEVATION

SCALE 1/4" = 1'-0"

C A-10.1

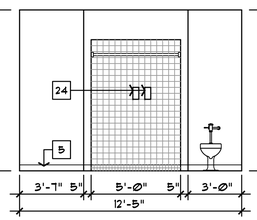

BATH 116 ELEVATION

SCALE 1/4" = 1'-0"

D A-10.1

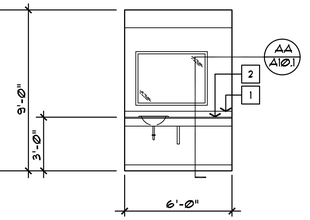

BATH 116 ELEVATION

SCALE 1/4" = 1'-0"

E A-10.1

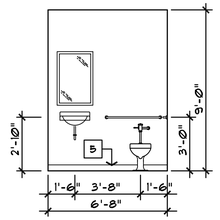

ADA RESTROOM ELEVATION

SCALE 1/4" = 1'-0"

F A-10.1

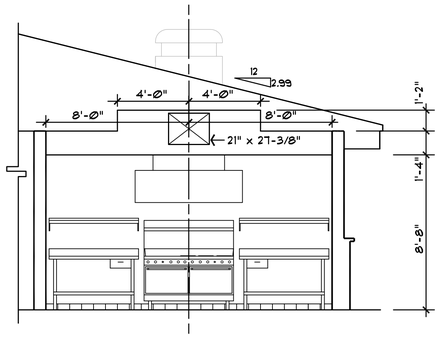

KITCHEN ELEVATION

SCALE 1/4" = 1'-0"

G A-10.1

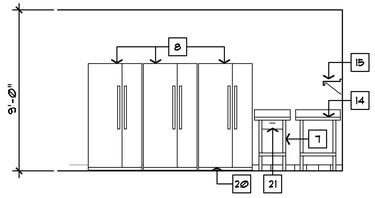

KITCHEN ELEVATION

SCALE 1/4" = 1'-0"

H A-10.1

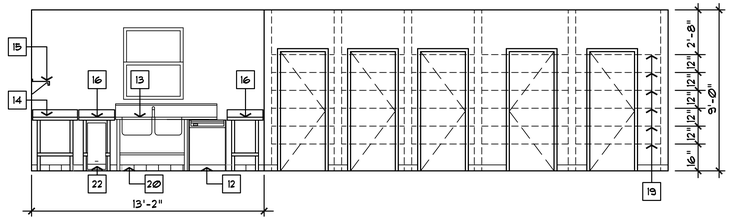

KITCHEN ELEVATION

SCALE 1/4" = 1'-0"

I A-10.1

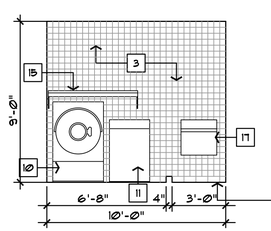

DECON. ELEVATION

SCALE 1/4" = 1'-0"

J A-10.1

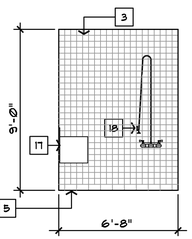

DECON. ELEVATION

SCALE 1/4" = 1'-0"

K A-10.1

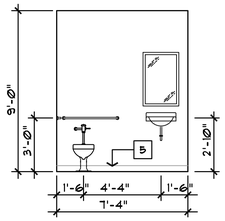

ADA RESTROOM ELEVATION

SCALE 1/4" = 1'-0"

L A-10.1

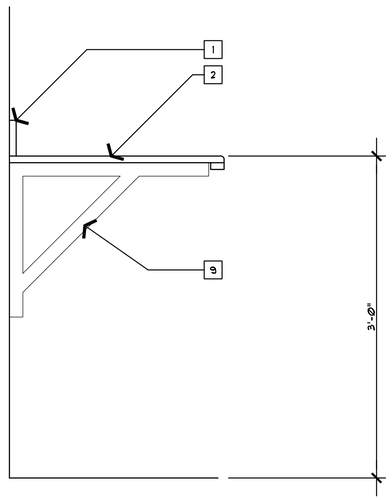

AA A-10.1 COUNTER DETAIL

SCALE: 1 1/2"=1'-0"

GENERAL NOTES

1. SEE ENLARGED FLOOR PLAN SHEET A-7.1 FOR TOILET ACCESSORIES

KEY NOTES

1	4" x 3/4" SOLID SURFACE BACKSPLASH.
2	3/4" SOLID SURFACE COUNTERTOP.
3	4 x 4 CERAMIC WALL TILE, FLOOR TO CEILING
4	TOILET PARTITIONS DASHED FOR CLARITY
5	CERAMIC TILE BASE
6	6' WIDE EXHAUST HOOD, SEE MECHANICAL
7	RANGE / OVEN WITH GRIDDLE
8	REFRIGERATORS
9	HEAVY DUTY SUPPORT BRACKETS EQUALLY SPACED. PROVIDE 2 x 4 ON END OF COUNTERS FOR SUPPORT.
10	COMMERCIAL HEAVY DUTY WASHING MACHINE
11	HEAVY DUTY DRYER
12	STAINLESS STEEL THREE 3 SIDED COVER FOR DISHWASHER (GE PDWT880P3S) PROVIDE STEEL ANGLES AND BRACKETS FOR ANCHORING TO FLOOR. COORDINATE FLOOR MOUNTING REQUIREMENTS OF DISHWASHER AND REQUIRED PLUMBING ACCESS POINTS.
13	6' SS 2 COMPARTMENT SINK
14	5' SS WORK TABLE
15	5' SS SHELF
16	2' SS WORK TABLE, COORDINATE LEGS WITH ICE MACHINE AND DISHWASHER
17	FIBERGLASS SINK WITH HANDS FREE CONTROLS
18	HAND HELD SHOWER
19	PROVIDE 6 HEAVY DUTY SHELVES ON HEAVY DUTY BRACKETS EACH CLOSET AND PANTRY TYPICAL. SHELVES ARE VENTILATED, 12" DEEP WIRE SHELVES SIMILAR TO CLOSETMAID SYSTEM. FOR 3 SMALL PANTRIES, PROVIDE 3 STANDARDS AND 3 BRACKETS EACH SHELF. FOR 2 LARGER CLOSETS, PROVIDE 4 STANDARDS AND 4 BRACKETS EACH SHELF. ALL COMPONENTS SHALL BE PROVIDED BY SAME MANUFACTURER.
20	QUARRY TILE BASE
21	S.S. DRAWER
22	STAINLESS STEEL THREE 3 SIDED COVER FOR ICE MACHINE 15" W x 23-5/8" D x 29" H. PROVIDE STEEL ANGLES AND BRACKETS FOR ANCHORING TO FLOOR. COORDINATE FLOOR MOUNTING REQUIREMENTS OF ICE MACHINE AND REQUIRED PLUMBING ACCESS POINTS.
23	1-1/2" THICK x 60" LONG SOLID SURFACE BENCH
24	PROVIDE 2 TILE SOAP DISHES, PER STALL. MOUNT 48" A.F.F. VERIFY LOCATION IN FIELD WITH ARCHITECT PRIOR TO INSTALLATION

INTERIOR ELEVATIONS

CITY OF TAMPA
CONTRACT ADMINISTRATION DEPARTMENT
PLANNING AND DESIGN DIVISION

306 E. JACKSON STREET 4 NORTH
TAMPA, FLORIDA 33602
p. 813. 274. 8456 - f. 813. 274. 8080
url: www.tampagov.net

James E. Jackson, Jr. AIA, NOMA
City Architect

Edward D. Rice, AIA
Project Architect

Kevin L. Herlica, AIA
Project Architect

Thomas A. Hester, Sr., AIA, NOMA
Project Architect

Kinsey C. Tillman
Drafting Technician

Jerry P. Sanders
Drafting Technician

Byron K. Thomas, LEED AP
Drafting Technician

MEP CONSULTANT
GRINER ENGINEERING, INC.
1628 1st. AVENUE NORTH
ST. PETERSBURG, FL 33713

STRUCTURAL CONSULTANT
BILLER REINHART STRUCTURAL GROUP, INC.
4014 GUNN HWY. SUITE 248
TAMPA, FL 33713

CIVIL CONSULTANT
5 M CIVIL LLC
12315 WYCLIFF PLACE
TAMPA, FL 33626

LANDSCAPE CONSULTANT
DAVID CONNER & ASSOCIATES
1509 W. SWANN AVENUE,SUITE 255
TAMPA, FL 33606

FIRE STATION 23
20770 TROUT CREEK DR.
TAMPA, FL 33647

DPW FILE NUMBER

DPW NUMBER
17-C-00037

ISSUE DATE
JULY 28, 2017

DRAWN BY
KINSEY TILLMAN

REVISIONS

SEAL

SCALE: VARIES

SHEET NUMBER
A-10.1

X OF X

K:\CA\Planning & Design Division\Varney\~James Jackson\FIRE\DPW\FIRE STATION 23 17-C-00037\FIRE STATION 23 17-C-00037 constr. docs\~fire 23 A-10.1 int elev.dwg, 8/1/2017 9:09:14 AM, Adobe PDF (temporary).pc3

ELECTRICAL SYMBOL LEGEND

SYMBOL	DESCRIPTION	MOUNTING
C	1 X 4 FLUORESCENT FIXTURE LETTER INDICATES TYPE	SEE FIXTURE SCHEDULE
	TRACK AND TRACK HEADS LETTER INDICATES TYPE	SEE FIXTURE SCHEDULE
A	2 X 4 FLUORESCENT FIXTURE LETTER INDICATES TYPE	SEE FIXTURE SCHEDULE
	SHADING DENOTES FIXTURE WITH EM BATTERY PACK. 'NL' DENOTES FIXTURE UNSWITCHED FOR NIGHT LIGHT	SEE FIXTURE SCHEDULE
	FLUORESCENT STRIP FIXTURE LETTER INDICATES TYPE	SEE FIXTURE SCHEDULE
C	FLUORESCENT WALL BRACKET FIXTURE LETTER INDICATES TYPE	SEE FIXTURE SCHEDULE
L	PL FLUORESCENT DOWNLIGHT LETTER INDICATES TYPE	SEE FIXTURE SCHEDULE
EX	EXIT–SHADING DENOTES FACEPLATE LOCATION. LETTER INDICATES TYPE. PROVIDE ARROWS AS REQUIRED.	SEE FIXTURE SCHEDULE
S S_3	SINGLE POLE SWITCH (20A–120/277) '3' DENOTES 3–WAY 'D' DENOTES DIMMER	48" AFF OR AS NOTED
IG	DUPLEX RECEPTACLE, 125V, 20A 'IG' DENOTES ISOLATED GROUND	18" AFF OR AS NOTED
	DUPLEX RECEPTACLE, 125V, 20A	18" AFF OR AS NOTED
	DUPLEX RECEPTACLE, 125V, 20A	48" AFF OR AS NOTED
	QUADRAPLEX RECEPTACLE, 125V, 20A	18" AFF OR AS NOTED
	POWER/TELEPHONE POLE	SEE DETAIL OR AS NOTED
	OUTLET BOX OR J–BOX FOR POWER AND DATA SUPPLY TO FURNITURE SYSTEMS	18" AFF OR AS NOTED
	COMBINATION VOICE/DATA OUTLET	18" AFF OR AS NOTED
	DATA OUTLET	18" AFF OR AS NOTED
TV	T.V. OUTLET	18" AFF OR AS NOTED
CR	CARD READER	COORIDANE WITH SECURITY INSTALLER
	INTERCOM CONSOLE	DESK MOUNTED
	INTERCOM REMOTE STATION	46" AFF WALL MOUNTED
	INTERCOM HORN	58" AFF WALL MOUNTED
B	GENERAL CALL BELL	58" AFF WALL MOUNTED
SC	SURVEILLANCE CAMERA	COORDINATE WITH SECURITY INSTALLER
	PANELBOARD 277/480V	SEE PANEL SCHEDULE
	PANELBOARD 120/208V	SEE PANEL SCHEDULE
T	DRY TYPE TRANSFORMER	SIZE AS NOTED
	RACEWAY CONCEALED IN WALL OR ABOVE CEILING	SEE SPECIFICATIONS
	RACEWAY CONCEALED UNDER FLOOR OR BELOW GRADE	SEE SPECIFICATIONS
	HOMERUN TO PANEL. LETTERS INDICATE PANEL, NUMBERS INDICATE CIRCUIT. NOTE: HASH MARKS INDICATES THE NUMBER OF WIRES EXCLUDING THE REQUIRED EQUIPMENT GROUND.	SEE SPECIFICATIONS
1	MOTOR, NUMERAL INDICATES HORSEPOWER	AS NOTED
$	MOTOR RATED SWITCH WITH OVERLOAD RELAYS AS REQUIRED.	MOUNTED ADJACENT TO EQUIPMENT
	NON–FUSIBLE SAFETY SWITCH–SIZE AS NOTED	SEE SPECIFICATIONS
	FUSIBLE SAFETY SWITCH–SIZE AS NOTED	SEE SPECIFICATIONS
RA SA	FIRE ALARM DUCT DETECTOR ('RA' DENOTES RETURN AIR 'SA' DENOTES SUPPLY AIR)	MOUNTED IN HVAC DUCTWORK
R	FIRE ALARM OR AIR HANDLER SHUTDOWN RELAY	MOUNTED ADJACENT TO EQUIPMENT
	FIRE ALARM VISUAL SIGNAL	80" AFF OR AS NOTED
	FIRE ALARM MANUAL PULLSTATION	48" AFF OR AS NOTED
	FIRE ALARM AUDIBLE/VISUAL SIGNAL. ADA COMPATIBLE	80" AFF OR AS NOTED
	FIRE ALARM SMOKE DETECTOR	ON CEILING OR AS NOTED
FACP FAA	FIRE ALARM PANEL ('FACP' DENOTES FIRE ALARM CONTROL PANEL, 'FAA' DENOTES ANNUNCIATOR)	60" AFF OR AS NOTED
	FIRE ALARM TAMPER AND FLOW SWITCH	
	FIRE ALARM HEAT DETECTOR	
3 3	REFER TO LIKE NUMBERED NOTES	

NOTE:

1. ALL MOUNTING HEIGHTS SHOWN ARE TO THE TOP OF THE DEVICE UNLESS NOTED OTHERWISE.
2. NOT ALL SYMBOLS APPEAR ON PLANS.

ELECTRICAL GENERAL NOTES:

1. ALL WORK SHALL CONFORM TO THE REQUIREMENTS OF THE FLORIDA BUILDING CODE, NATIONAL ELECTRIC CODE, CITY OF TAMPA STANDARDS, NFPA CODES, AND ALL LOCAL ORDINANCES LATEST EDITIONS.
2. THE WORK, APPARATUS AND MATERIALS, WHICH SHALL BE FURNISHED UNDER THE SPECIFICATIONS AND ACCOMPANYING DRAWINGS, SHALL INCLUDE ALL ITEMS SPECIFIED HEREINAFTER AND SHOWN ON THE DRAWINGS. ALL OTHER MATERIALS NECESSARY FOR THE COMPLETE INSTALLATION SHALL BE FURNISHED AND INSTALLED BY THE CONTRACTOR. CONTRACTOR TO PROVIDE COMPLETE ELECTRICAL SYSTEMS AS INDICATED ON THE DRAWINGS AND AS SPECIFIED HEREIN.
3. THE CONTRACTOR SHALL EXTEND THE SERVICE FROM THE POINT OF SERVICE ATTACHMENT FURNISHING ALL PROTECTIVE DEVICES, CONDUCTORS, SUPPORTS, RACEWAYS, ETC. TO PROVIDE COMPLETE INTERIOR ELECTRICAL SYSTEMS TO SERVE MOTOR LOADS, LIGHTING LOADS AND MISCELLANEOUS ELECTRICAL LOADS, AS SHOWN ON THE DRAWINGS AND AS SPECIFIED HEREINAFTER. THE WORK SHALL INCLUDE COMPLETE TESTING OF ALL EQUIPMENT AND WIRING AT THE COMPLETION OF THE WORK AND MAKING ANY MINOR CONNECTION CHANGES OR ADJUSTMENTS NECESSARY FOR THE PROPER FUNCTIONING OF THE SYSTEM AND EQUIPMENT. ALL WORKMANSHIP SHALL BE OF THE HIGHEST QUALITY AND NO SUBSTANDARD WORK WILL BE ACCEPTED.
4. CONTRACTOR SHALL PAY FOR ALL FEES FOR INSPECTIONS AND TESTING.
5. ALL REQUIRED INSURANCE TO BE PROVIDED FOR PROTECTION AGAINST PUBLIC LIABILITY OF PROPERTY DAMAGE FOR DURATION OF THE WORK.
6. ELECTRICAL INSTALLATION TO MEET ALL STANDARD REQUIREMENTS OF THE LOCAL POWER AND TELEPHONE COMPANIES. ELECTRICAL CONTRACTOR SHALL CONTACT LOCAL POWER AND TELEPHONE COMPANY PRIOR TO BID AND START OF CONSTRUCTION.
7. THE CONTRACTOR SHALL MEET AND COORDINATE WITH THE LOCAL POWER COMPANY AT THE SITE PRIOR TO CONSTRUCTION. AT THAT TIME, THE CONTRACTOR SHALL COORDINATE ALL RELATED WORK WITH THE UTILITY COMPANY'S RESPONSIBILITIES TO MEET THE OWNER'S SCHEDULE.
8. IN GENERAL, MATERIALS AND APPARATUS SHALL COMPLY WITH ALL APPLICABLE TESTS, RATINGS, SPECIFICATIONS, AND REQUIREMENTS OF THE IEEE AND NEMA AND SHALL BEAR THE APPROVED DEVICE LABEL OF THE UNDERWRITERS' LABORATORIES, INC. OR OTHER TESTING LABORATORY APPROVED BY THE LOCAL AUTHORITY HAVING JURISDICTION.
9. CONTRACTOR SHALL GUARANTEE ALL WORK FOR A PERIOD OF ONE YEAR FROM DATE OF SUBSTANTIAL COMPLETION. CONTRACTOR SHALL RECTIFY ANY DEFECTS DUE TO FAULTY MATERIALS OR WORKMANSHIP AND PAY FOR ANY DAMAGE TO OTHER WORK RESULTING THEREFROM WITHIN SAID PERIOD. THE OWNER WILL GIVE NOTICE OF DEFECTS WITH REASONABLE PROMPTNESS.
10. BIDDERS ARE TO VISIT THE SITE AND FAMILIARIZE THEMSELVES WITH EXISTING SITE CONDITIONS AND SATISFY THEMSELVES AS TO THE NATURE AND SCOPE OF WORK. THE SUBMISSION OF A BID WILL BE EVIDENCED THAT SUCH AN EXAMINATION HAS BEEN MADE. LATER CLAIMS FOR LABOR, EQUIPMENT OR MATERIALS REQUIRED, OR FOR DIFFICULTIES ENCOUNTERED WHICH COULD HAVE BEEN FORESEEN HAD AN EXAMINATION BEEN MADE, WILL NOT BE ALLOWED.
11. ELECTRICAL CONTRACTOR SHALL BE EXPERIENCED IN PERFORMING AND INSTALLING OF WORK SIMILAR TO THAT REQUIRED FOR THIS PROJECT.
12. THE CONTRACTOR SHALL INCLUDE WITHIN THE BID ALL REQUIRED OFF HOUR, OVERTIME, AND NON–BUSINESS HOUR WORK AS REQUIRED TO PERFORM THE WORK.
13. ALL WORK SHALL BE COORDINATED WITH OTHER TRADES FOR ITEMS IN THEIR SCOPE OF WORK WHICH WOULD REQUIRE ELECTRICAL WORK (DISCONNECTION/RECONNECTION ETC.) AND ARE NOT INDICATED ON THE ELECTRICAL PLANS. ALL SUBCONTRACTORS ARE REQUIRED TO COORDINATE THEIR WORK WITH OTHER TRADES. LACK OF THIS COORDINATION RESULTING IN ADDED COST TO THE CONTRACT WILL BE BORNE BY THE SUBCONTRACTOR.
14. THE CONTRACTOR SHALL PROVIDE SHOP DRAWINGS AND SUBMITTALS FOR ELECTRICAL EQUIPMENT SHOWN ON THE PLANS AND SPECIFICATIONS FOR THE ENGINEERS APPROVAL. THE ENGINEER MAY REQUIRE THE CONTRACTOR TO REDO ANY WORK, WHICH WAS NOT APPROVED, OR THE ENGINEER MAY REQUIRE A CREDIT TO THE OWNER. PROVIDE A SET OF AS–BUILTS AFTER THE JOB IS COMPLETED. THIS SET SHALL BE CONTINUOUSLY UPDATED DURING CONSTRUCTION.
15. PROVIDE IDENTIFICATION FOR ALL LIGHT FIXTURES AND ALL ELECTRICAL COVER PLATES WITH PERMANENT MARKER ON A SELF–ADHERING TAG INDICATING PANEL AND CIRCUIT NUMBER. TYPICAL FOR ALL LIGHTING AND POWER DEVICES.
16. ALL WIRING IN CEILING SPACE OR IN AIR HANDLING PLENUMS NOT IN CONDUIT SHALL BE UL LISTED AS SUITABLE FOR PLENUM USE.
17. REFER TO RISER DIAGRAM FOR FEEDER SIZES FOR PANELBOARDS.
18. OVER CURRENT PROTECTION, WIRE SIZE, AND NUMBER OF CONNECTION POINTS FOR MECHANICAL HVAC EQUIPMENT IS FOR ITEMS AS SPECIFIED. COORDINATE WITH MECHANICAL CONTRACTOR AND MAKE NECESSARY CHANGES PRIOR TO INSTALLATION FOR ACTUAL EQUIPMENT FURNISHED AT NO COST TO OWNER. REFER TO MECHANICAL DRAWINGS FOR EXACT LOCATION OF MECHANICAL EQUIPMENT. REFER TO HVAC/ELECTRICAL SCHEDULE FOR WIRING INFORMATION.
19. PROVIDE ARC FLASH LABELING FOR ALL ELECTRICAL EQUIPMENT (SWITCHBOARD, PANELBOARDS, DISCONNECT SWITCHES, METER SOCKET ENCLOSURES, AND MOTOR CONTROL CENTER) PER NFPA 70E.
20. ALL JUNCTION BOXES AND COVER PLATES SHALL BE PAINTED AND LABELED.
21. ALL RECEPTACLES WITHIN (6) FEET OF PLUMBING FIXTURES SHALL BE PROVIDED WITH 5 MILLIAMP GROUND FAULT INTERRUPTERS.
22. EDGE OF LIGHT SWITCH WALL PLATE SHALL BE NOT MORE THAN 4" AWAY FROM METAL/WOOD DOOR FRAME. TYPICAL FOR SINGLE OR MULTIPLE WALL SWITCHES.
23. CONFIRM MOUNTING HEIGHTS AND COORDINATE LOCATION OF ALL OUTLETS, SWITCHES, AND OTHER DEVICES WITH OWNER PRIOR TO ROUGH–IN.
24. PROVIDE SEAL FOR PENETRATION OF FIRE RATED WALLS/CEILINGS BY CONDUIT.
25. BACK TO BACK RECEPTACLES IN ALL ONE HOUR FIRE RATED WALLS SHALL BE LOCATED A MINIMUM OF 24" ON CENTER.
26. BRANCH CIRCUIT CONDUCTORS SHALL NOT BE SMALLER THAN NO. 12 AND WHERE BRANCH CIRCUIT CONDUCTOR RUNS FROM SOURCE (PANEL) TO THE LAST DEVICE ON THE CIRCUIT EXCEEDS 75 FT. IN LENGTH, THE CONDUCTORS SHALL BE NO. 10 MINIMUM AND FOR THE ENTIRE LENGTH OF THE CIRCUIT. FOR RUNS OVER 150 FT. IN LENGTH THE CONDUCTOR SHALL BE NO. 8 MINIMUM AND FOR THE ENTIRE LENGTH OF THE CIRCUIT. THE ABOVE APPLIES TO 120 VOLT CIRCUITS ONLY.
27. REFER TO ELECTRICAL SPECIFICATIONS PROVIDED IN BOOK FORMAT – SECTION 16.
28. UPON COMPLETION OF THE WORK, THE CONTRACTOR SHALL INSURE THAT ALL SYSTEMS OPERATE AS DESIGNED AND REQUIRED AND SHALL REVIEW THEIR OPERATION WITH THE OWNER AND PROVIDE TRAINING OF THE MAINTENANCE PERSONNEL.
29. THE CONTRACTOR SHALL STRICTLY CONFORM TO THE NEC REQUIREMENTS FOR DE–RATING FOR CONDUCTOR CAPACITY AND CONDUIT FILL.
30. MINIMUM CONDUIT SIZE SHALL BE 3/4" C.
31. THIS CONTRACTOR SHALL PROVIDE AUTOCAD AS–BUILT DRAWINGS (PLOTTED VELLUMS) AND COPIES OF EACH AUTOCAD FILE ON COMPACT DISC (CD) TO OWNER.
32. PROVIDE FIRE ALARM SYSTEM IN ACCORDANCE WITH DRAWINGS AND APPLICABLE CODES. PROVIDE CONDUIT AND WIRING IN ACCORDANCE WITH MANUFACTURER'S APPROVED SHOP DRAWINGS. PROVIDE WRITTEN CERTIFICATION FROM MANUFACTURER'S REPRESENTATIVE THAT THE SYSTEM IS FULLY OPERATIONAL AND HAS BEEN CHECKED OUT THOROUGHLY BY A FACTORY TRAINED REPRESENTATIVE. THE CHECK–OUT PROCEDURES SHALL BE AS RECOMMENDED BY THE MANUFACTURER. FORMAL TRAINING OF THE OWNER OR OWNER'S REPRESENTATIVE SHALL BE PERFORMED AND A LETTER CERTIFYING THAT THIS WAS PERFORMED SHALL BE SUBMITTED WITH THE AS–BUILT DRAWINGS. REFER TO FIRE ALARM NOTES ON ELECTRICAL SYSTEM PLAN.

ALL MATERIAL, DEVICES, AND EQUIPMENT MUST COMPLY WITH BUY AMERICAN REQUIREMENTS OF AMERICAN RECOVERY & REINVESTMENT ACT.

ABBREVIATIONS:

AFF	– ABOVE FINISHED FLOOR	HVAC	– HEATING,VENTILATING,A/C
AHU	– AIR HANDLING UNIT	JB	– JUNCTION BOX
BFG	– BELOW FINISHED GRADE	LRA	– LOCKED ROTOR AMPERES
C	– CONDUIT	MCB	– MAIN CIRCUIT BREAKER
CW	– COOL WHITE	MLO	– MAIN LUGS ONLY
DACP	– DOOR ALARM CONTROL PANEL	N	– NEUTRAL
DN	– DOWN	NL	– NIGHT LIGHT
EF	– EXHAUST FAN	OB	– OUTLET BOX
EG	– EQUIPMENT GROUND	PB	– PULL BOX, PUSH–BUTTON
ENCL	– ENCLOSURE	PS	– PAY STATION
EWC	– ELECTRIC WATER COOLER	SF	– SUPPLY FAN
EWH	– ELECTRIC WATER HEATER	SPEC	– SPECIFICATIONS
WX	– EXPLOSION PROOF	TL	– TWISTLOCK
FCU	– FAN COIL UNIT	TTB	– TELEPHONE TERMINAL BOARD
FHP	– FRACTIONAL HORSE POWER	TVTB	– TELEVISION TERMINAL BOARD
FLA	– FULL LOAD AMPERES	UNO	– UNLESS NOTED OTHERWISE
G	– GROUND	VERT	– VERTICAL
GFI	– GROUND FAULT INTERRUPTER	WM	– WATT MISER
HID	– HIGH INTENSISTY DISCHARGE	WP	– WEATHERPROOF
HORIZ	– HORIZONTAL	WW	– WARM WHITE
IG	– ISOLATED GROUND	XFMR	– TRANSFORMER
LW	– LIGHT WHITE		
HP	– HORSEPOWER, HEAT PUMP		

NATIONAL ELECTRIC CODE NOTES:

ALL WORK SHALL CONFORM TO THE REQUIREMENTS OF NFPA 70 - 2008 NATIONAL ELECTRIC CODE

FIRE ALARM GENERAL NOTES:

1. FIRE ALARM WORK SHALL BE AWARDED TO ELECTRICAL/FIRE ALARM CONTRACTOR.
2. THE FIRE ALARM SYSTEM SHALL COMPLY WITH NFPA-101; NFPA-72 AND NFPA-70.
3. ALL FIRE ALARM WORK SHALL BE DONE BY A LICENSED FIRE ALARM CONTRACTOR WITH SEPARATE PLANS.

ELECTRICAL SUBMITTAL NOTES:

SUBMIT ALL ELECTRICAL AND FIRE ALARM SYSTEMS SUBMITTALS AT ONE (1) TIME IN ONE (1) INTEGRAL GROUP. PIECE–BY–PIECE SUBMISSION OF INDIVIDUAL ITEMS WILL NOT BE ACCEPTABLE. ENGINEER MAY CHECK CONTENTS OF EACH SUBMITTAL SET UPON INITIAL DELIVERY; IF NOT COMPLETE AS SET FORTH HEREIN, SUBMITTAL SETS MAY BE RETURNED TO CONTRACTOR WITHOUT REVIEW AND APPROVAL AND WILL NOT BE ACCEPTED UNTIL MADE COMPLETE. SHOP DRAWINGS WILL BE REVIEWED MAXIMUM TWICE AS PART OF THIS CONTRACT. ADDITIONAL SHOP DRAWING REVIEWS SHALL BE INVOICED AT $85.00 PER HOUR, BILLABLE TO THE SUB–CONTRACTOR.

LIGHTNING PROTECTION GENERAL NOTES:

PROVIDE COMPLETE MASTER LABEL UL LISTED, LPI CERTIFIED LIGHTNING PROTECTION SYSTEM IN FULL COMPLIANCE WITH THE LATEST EDITION OF NFPA 780. SUBMIT COMPLETE SHOP DRAWINGS TO SHOWING ROOF LAYOUT, DOWN LOCATIONS, GROUND ROD LOCATIONS, ETC. AND ALL CONNECTION DETAILS TO OWNER FOR REVIEW AND APPROVAL PRIOR TO CONSTRUCTION. CONTACTOR SHALL PERFORM ALL REQUIRED RESISTANCE AND CONTINUITY TESTING AFTER INSTALLATION IS COMPLETE.

ELECTRICAL DRAWING INDEX:

#	SHEET	DESCRIPTION
1	E0.1	ELECTRICAL COVER SHEET
2	E1.1	ELECTRICAL SITE PLAN
3	E2.1	ELECTRICAL LIGHTING PLAN
4	E2.2	ELECTRICAL POWER PLAN
5	E2.3	ELECTRICAL SYSTEM PLAN
6	E2.4	ELECTRICAL HVAC PLAN
7	E2.5	ELECTRICAL ROOF PLAN
8	E3.1	ELECTRICAL RISER DIAGRAM
9	E3.2	ELECTRICAL PANEL SCHEDULES
10	E4.1	ELECTRICAL DETAILS
11	E4.2	ELECTRICAL DETAILS
12	E4.3	ELECTRICAL DETAILS
13	E4.4	ELECTRICAL DETAILS
14	E4.5	GENERATOR DETAILS
15	E5.1	ELECTRICAL LIGHTING FIXTURE SCHEDULE AND CONTROL PANEL DETAILS
16	E5.2	ELECTRICAL LIGHTING SYSTEM RISER AND DETAILS
17	E5.3	ELECTRICAL LIGHTING CONTROL SCHEDULE
18	E6.1	FIRE ALARM RISER DIAGRAM
19	E6.2	FIRE ALARM DETAILS

CITY OF TAMPA
CONTRACT ADMINISTRATION DEPARTMENT
PLANNING AND DESIGN DIVISION
306 E. JACKSON STREET 4 NORTH
TAMPA, FLORIDA 33602
p: 813. 274. 8456 – f: 813. 274. 8080
url: www.tampagov.net

James E. Jackson, Jr. AIA, NOMA
City Architect
Edward D. Rice, AIA
Project Architect
Kevin L. Henika, AIA
Project Architect
Thomas A. Hester, Sr., AIA, NOMA
Project Architect
David R. Pagitt
Supervisor, Architectural Drafting
Kinsey C. Tillman
Drafting Technician
Jerry P. Sanders
Drafting Technician
Byron K. Thomas, LEED AP
Drafting Technician

MEP CONSULTANT
GRINER ENGINEERING, INC.
1628 1st. AVENUE NORTH
ST. PETERSBURG, FL 33713

STRUCTURAL CONSULTANT
BILLER REINHART STRUCTURAL GROUP, INC.
4014 GUNN HWY. SUITE 248
TAMPA, FL 33713

CIVIL CONSULTANT
B M CIVIL LLC
12315 WYCLIFF PLACE
TAMPA, FL 33626

LANDSCAPE CONSULTANT
DAVID CONNER & ASSOCIATES
1509 W. SWANN AVENUE,SUITE 255
TAMPA, FL 33606

FIRE STATION 23
20770 TROUT CREEK DR.
TAMPA, FL 33647

DPW FILE NUMBER

DPW NUMBER
17–C–00037

ISSUE DATE
07–28–2017

DRAWN BY

REVISIONS

SEAL

Jose A Rosario, P.E. FL. 74457

SCALE: N.T.S.

ELECTRICAL COVER SHEET

SHEET NUMBER
E0.1
X OF X

GRINER
GRINER ENGINEERING, INC.
1628 First Avenue North
St. Petersburg, Florida 33713
Phone: (727)-822-2335
Fax: (727)-821-3361
Certificate of Authorization #3173

Date	06-15-2017
Drawn	HH
Designed	HH
EOR	JAR
Job no.	17049

HH

THIS DETAIL REPRESENTS

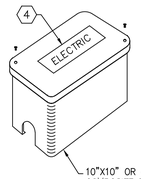

NOTES:

1. PREPARE THE EXCAVATION. EXCAVATE APPROXIMATELY 6" DEEPER THAN DEPTH OF THE ENCLOSURE. ADD 6" OF GRAVEL OR CRUSHED ROCK FOR DRAINAGE.
2. PROVIDE A PVC WP JUNCTION BOX FOR CIRCUIT SPLICES. ALL SPLICES SHALL BE UL LISTED AND MADE WITH WATERTIGHT CONNECTIONS ILSCO PED SERIES OR EQUIVALENT. PROVIDE WP SEALANTS FOR CONDUITS IN THE BOX. ALL TOP OF ENCLOSURE SHOULD BE AT GRADE LEVEL.
3. FILL AND COMPACT SOIL. FILL TO GRADE LEVEL WITH COVER IN ENCLOSURE
4. PROVIDE HAND HOLE WITH COVER LABELED "ELECTRIC"

10"X10" OR AS REQUIRED QUAZITE PG SERIES OR EQUAL COMPOSITE BOX TRAFFIC RATED WITH GASKETS RATED: TIER 15 OR 22 (REFER TO TABLE BELOW)

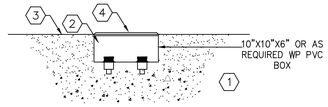

Application	Loading Requirements			
TIER 8 Sidewalk applications with a safety factor for non-deliberate vehicular traffic.	Vertical	Design Load Test Load	35.6 kN 53.4 kN	8000 pounds 12000 pounds
	Lateral	Design Load Test Load	28.7 kPa 43.1 kPa	600 pounds/sq. ft. 900 pounds/sq. ft.
TIER 15 Driveway, parking lot, and off-roadway applications subject to occasional non-deliberate heavy vehicular traffic	Vertical	Design Load Test Load	66.7 kN 100.1 kN	15000 pounds 22500 pounds
	Lateral	Design Load Test Load	38.3 kPa 57.5 kPa	800 pounds/sq. ft. 1200 pounds/sq. ft.
AASHTO H-20 Deliberate vehicular traffic applications	Certified precast concrete, cast iron or AASHTO recognized materials			

Table 1 – Design and Test Loads (From ANSI/SCTE 77-2002 *Specifications for Underground Enclosures Integrity*)

THE ENCLOSURE SHALL BE UL LISTED FOR WET LOCATION AND EXCEED THE PERFORMANCE REQUIREMENTS OF ANSI/SCTE 77 AND NFPA 70 (NATIONAL ELECTRICAL CODE)

IN GROUND PULLBOX DETAIL

NOT TO SCALE

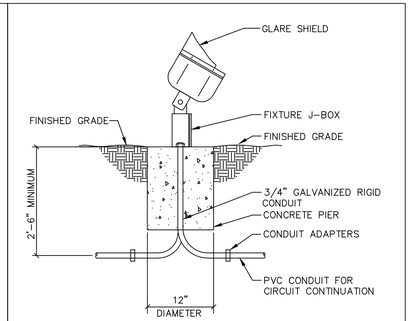

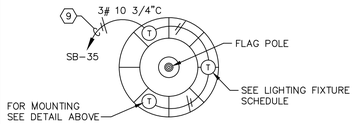

FLAG POLE LIGHTING DETAIL

NOT TO SCALE

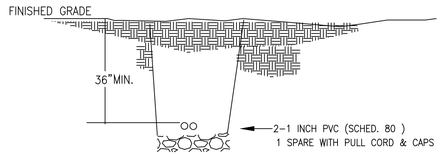

SERVICE TRENCHING NOTES:

1. CONTRACTOR SHALL TRENCH AND INSTALL UNDERGROUND SERVICE AS SHOWN, AS REQUIRED BY UTILITY. CONTRACTOR SHALL HAVE THE LOCATED BY A LOCAL SERVICE, OR THE UTILITY, PRIOR TO ANY DIGGING, ENTIRE TRENCH ROUTE AS INTENDED.

TYPICAL SERVICE TRENCH CONFIGURATION

NOT TO SCALE

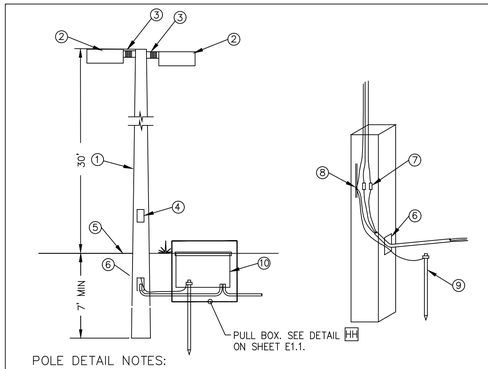

POLE DETAIL NOTES:

1. PROVIDE A 37' DIRECT BURIAL CONCRETE POLE. THE POLE, COMPLETE WITH MOUNTING DEVICE AND LUMINARIES IN PLACE, SHALL BE CAPABLE OF WITHSTANDING A SUSTAINED WIND VELOCITY NOT LESS THAN REQUIRED BY THE FLORIDA BUILDING CODE. CONTRACTOR SHALL PROVIDE AND SUBMIT SIGNED AND SEALED DRAWINGS BY A FLORIDA STATE LICENSED PROFESSIONAL STRUCTURAL ENGINEER.
2. PROVIDE REQUIRED BRACKET ARM AND ACCESSORIES COMPATIBLE WITH POLE DESIGN.
3. PROVIDE GROUND WIRE ATTACHED TO GROUND LUG OR THROUGH BOLT ON BRACKET ARM, AND TO GROUND LUG ON LUMINAIRE.
4. STANDARD HANDHOLE WITH METAL COVER ATTACHED WITH STAINLESS STEEL MACHINE SCREWS. MAKE CIRCUIT SPLICES IN THIS HANDHOLE.
5. BACKFILL AS DIRECTED BY THE STRUCTURAL ENGINEER.
6. PROVIDE CONDUIT ENTRANCE BELOW GRADE.
7. PROVIDE 10 AMP FNQ SLOW BLOW FUSE.
8. SPLICE GROUND WIRES INSIDE HANDHOLE AND SECURELY BOND GROUND WIRES TO A CONTINUOUS STEEL BAR IN THE POLE.
9. PROVIDE 3/4 " DIA. X 10'-0" COPPER GROUND ROD AT EACH POLE. PROVIDE #10 AWG, CU BARE GROUND WIRE FROM EACH LUMINAIRE AND BONDED TO GROUND ROD (TYPICAL). PROVIDE THE CONCRETE POLE WITH A #4 AWG STRANDED BARE COPPER CONDUCTOR BONDED TO STEEL BAR IN POLE AND TO GROUND ROD.
10. PULL BOX. SEE DETAIL THIS SHEET.

SITE LIGHTING POLE DETAIL - 'SA'

NOT TO SCALE

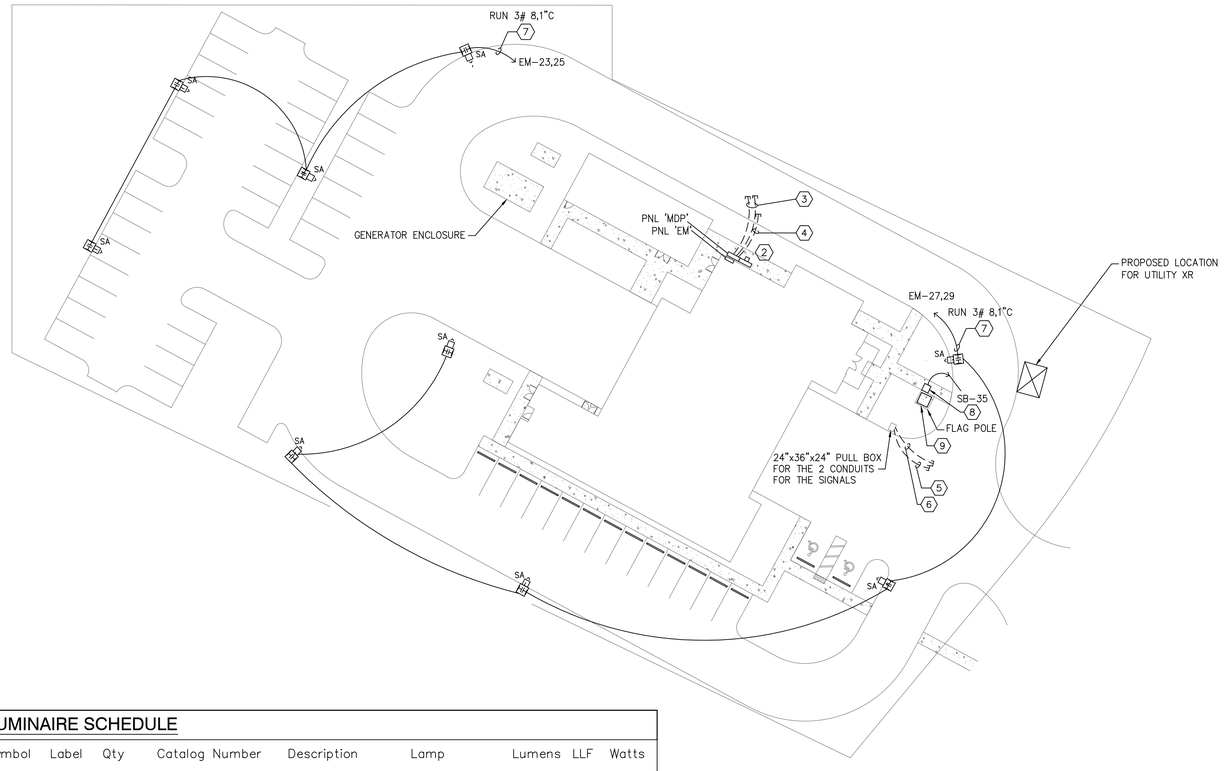

LUMINAIRE SCHEDULE

Symbol	Label	Qty	Catalog Number	Description	Lamp	Lumens	LLF	Watts
	SA	9	POLE MOUNTED AT 30'-0"	AER-II-100LED-NW-350 AEROLUME BY U.S ARCHITECTURAL LIGHTING	100LED	12000	0.85	108

N

ELECTRICAL SITE PLAN

SCALE: 1/32" = 1'-0"

ELECTRICAL SITE PLAN NOTES

1. UTILITY COMPANY HAND HOLE AT UTILITY POLE MOUNTED TRANSFORMER. SECONDARY VOLTAGE TO BE 120/208Y 3 PHASE, 4 WIRE WYE. COORDINATE EXACT LOCATION AND REQUIREMENTS WITH POWER COMPANY PRIOR TO BID AND ROUGH-I. SEE ELECTRICAL SHEETS FOR ADDITIONAL REQUIREMENTS.
2. UTILITY 3PH METER BASE PER UTILITY COMPANY SPEC, WALL MOUNTED.
3. PROVIDE (2)-2" EMPTY CONDUIT WITH PULL-WIRE TO 5' OUTSIDE PROPERTY LINE FOR INCOMING TELEPHONE SERVICE. COORDINATE FINAL LOCATIONS AND EXACT ROUTING OF CONDUIT WITH LOCAL TELEPHONE COMPANY PRIOR TO ROUGH-IN AND MAKE FIELD ADJUSTMENTS AS NECESSARY.
4. PROVIDE (1)-2" EMPTY CONDUIT WITH PULL-WIRE TO 5' OUTSIDE PROPERTY LINE FOR INCOMING CATV BROADBAND SERVICE. COORDINATE FINAL LOCATIONS AND EXACT ROUTING OF CONDUIT WITH LOCAL CATV COMPANY PRIOR TO ROUGH-IN AND MAKE FIELD ADJUSTMENTS AS NECESSARY.
5. PROVIDE (1)-2" EMPTY CONDUIT WITH PULL-WIRE FROM TRAFFIC CONTROL PANEL TO FIRE STATION BUILDING FOR TRAFFIC CONTROL OF THE SIGNAL. COORDINATE FINAL LOCATIONS AND EXACT ROUTING OF CONDUITS WITH OWNER, ARCHITECT AND SIGNAL CONTROL INSTALLER PRIOR TO ROUGH-IN AND MAKE FIELD ADJUSTMENTS AS NECESSARY.
6. PROVIDE (1)-2" C FOR POWER CIRCUITS FROM TRAFFIC CONTROL PANEL TO FIRE STATION BUILDING FOR POWER OF THE SIGNAL (WIRES TO BE SIZED FOR MAXIMUM 2% VOLTAGE DROP). COORDINATE FINAL LOCATIONS, EXACT ROUTING OF CONDUITS AND POWER REQUIREMENTS WITH OWNER, ARCHITECT AND SIGNAL CONTROL INSTALLER PRIOR TO ROUGH-IN AND MAKE FIELD ADJUSTMENTS AS NECESSARY. CONTRACTOR SHALL SUBMIT TO ENGINEER AND OWNER IN WRITING THE REQUIRED INFORMATION FOR FINAL APPROVAL.
7. ROUTE HOMERUN VIA LIGHTING CONTROL PANEL. CONTROL FOR SITE LIGHTS TO BE PHOTOCELL ON AND PHOTOCELL OFF.
8. FLAG POLE LIGHTS. REFER TO FLAG POLE DETAIL ON THIS SHEET. COORDINATE EXACT FLAG POLE LOCATION WITH CIVIL ENGINEER, ARCHITECT AND OWNER. AIM FIXTURE AT NIGHT AS DIRECTED BY THE OWNER.
9. CONTROL FOR FLAG POLE LIGHTS TO BE PHOTOCELL ON AND PHOTOCELL OFF.
10. PROVISIONS IN GROUND PULL BOX FOR EXTERIOR POLE LIGHTING, COORDINATE EXACT LOCATION FOR POLES WITH CIVIL ENGINEER, ARCHITECT AND OWNER.

GENERAL SITE NOTES:

1. ELECTRICAL CONTRACTOR TO COORDINATE ALL ELECTRICAL WORKS WITH OWNER AND ARCHITECT PRIOR TO START ANY WORK. NO EXCEPTION.
2. COORDINATE ALL ELECTRICAL WORK AND REQUIREMENTS WITH POWER COMPANY (TECO) PRIOR TO BID AND ROUGH-IN. THE CONTRACTOR SHALL INCLUDE IN THE BID ALL ELECTRIC UTILITY FEES TO PROVIDE ELECTRICAL SERVICE TO THE PROJECT.
3. CONTRACTOR IS RESPONSIBLE FOR COORDINATING ALL UTILITY SERVICES TO THE BUILDING WITH THEIR RESPECTIVE PROVIDERS. FAILURE TO DO SO WILL NOT RESULT IN ANY EXTRA FINANCIAL COMPENSATION FROM THE OWNER. CONTRACTOR SHALL HAVE ALL UTILITY SERVICE REQUIREMENTS IN BID.
4. THE ELECTRICAL CONTRACTOR SHALL COORDINATE AS NECESSARY ALL UNDERGROUND LOCATIONS WITH OTHER TRADES PRIOR TO DIGGING BEING DONE.
5. EACH CONTRACTOR RESPONSIBLE FOR EXCAVATION WORK SHALL BE REQUIRED TO PROVIDE ALL NECESSARY BARRICADES, FENCING, BRACING, SHORING, SHEET PILING, WARNING SIGNS, PUMPING, ETC., FOR THE PROTECTION OF WORKERS, GENERAL PUBLIC AND PROPERTIES. EXCAVATION WORK SHALL COMPLY WITH ASA STANDARD A10.2 "SAFETY CODE FOR BUILDING CONSTRUCTION" AND AGC STANDARD, "MANUAL OF ACCIDENT PREVENTION IN CONSTRUCTION" AND THE DEPARTMENT OF LABOR OCCUPATIONAL SAFETY AND HEALTH STANDARDS.
6. CONTRACTOR SHALL BE RESPONSIBLE FOR THE PROPER LAYOUT AND THE ESTABLISHMENT OF ALL LINES AND LEVELS REQUIRED FOR THE EXECUTION OF HIS WORK. COORDINATION OF TRADES TO AVOID INTERFERENCE, MEET CLEARANCES, ETC. IS THE CONTRACTOR'S RESPONSIBILITY.
7. PROVIDE ALL EXCAVATION AND BACKFILL REQUIRED FOR THE INSTALLATION OF ELECTRICAL WORK.
8. PROVIDE PROTECTION FOR TREES WITHIN 15 FEET OF UTILITY EXCAVATION.
9. DEBRIS, TRASH OR ROCK NOT USABLE FOR FILL SHALL BE REMOVED FROM THE SITE BY EACH CONTRACTOR.
10. EACH CONTRACTOR SHALL BE RESPONSIBLE FOR IMMEDIATE "CLEAN-UP" OF STREETS, ROADWAYS, AND PRIVATE PROPERTY DUE TO EXCAVATION.
11. ALL BACKFILL MATERIALS SHALL BE CLEAN AND FREE FROM TRASH, DEBRIS, ORGANIC MATERIAL AND ROCKS (OVER 4"). COMPACT IN 6" LIFTS TO 95% OF COMPACTION PER THE PROCTOR TEST. HAND COMPACT ALL MATERIALS WITHIN 18" OF CONDUITS, PIPES, ETC.
12. CONTRACTOR TO ENSURE THAT THE SITE LIGHTING SUBMITTAL IS ACCOMPANIED WITH A PHOTOMETRIC PLAN IF THE SUBMITTAL DEFERS FROM THE ONE SHOWN.

GRINER

GRINER ENGINEERING, INC.
1628 First Avenue North
St. Petersburg, Florida 33713
Phone: (727)-822-2335
Fax: (727)-821-3361
Certificate of Authorization #3173

Date	06-15-2017
Drawn	HH
Designed	HH
EOR	JAR
Job no.	17049

CITY OF TAMPA
CONTRACT ADMINISTRATION DEPARTMENT
PLANNING AND DESIGN DIVISION
306 E. JACKSON STREET 4 NORTH
TAMPA, FLORIDA 33602
p: 813. 274. 8456 - f: 813. 274. 8080
url: www.tampagov.net

James E. Jackson, Jr. AIA, NOMA
City Architect
Edward D. Rice, AIA
Project Architect
Kevin L. Henika, AIA
Project Architect
Thomas A. Hester, Sr., AIA, NOMA
Project Architect
David R. Pagitt
Supervisor, Architectural Drafting
Kinsey C. Tillman
Drafting Technician
Jerry P. Sanders
Drafting Technician
Byron K. Thomas, LEED AP
Drafting Technician

MEP CONSULTANT
GRINER ENGINEERING, INC.
1628 1st. AVENUE NORTH
ST. PETERSBURG, FL 33713

STRUCTURAL CONSULTANT
BILLER REINHART STRUCTURAL GROUP, INC.
4014 GUNN HWY. SUITE 248
TAMPA, FL 33713

CIVIL CONSULTANT
B M CIVIL LLC
12315 WYCLIFF PLACE
TAMPA, FL 33626

LANDSCAPE CONSULTANT
DAVID CONNER & ASSOCIATES
1509 W. SWANN AVENUE,SUITE 255
TAMPA, FL 33606

FIRE STATION 23
20770 TROUT CREEK DR.
TAMPA, FL 33647

DPW FILE NUMBER

DPW NUMBER
17-C-00037

ISSUE DATE
07-28-2017

DRAWN BY

REVISIONS

SEAL

Jose A Rosario, P.E. FL. 74457

SCALE: 1/32" = 1'-0"

ELECTRICAL SITE PLAN

SHEET NUMBER
E1.1
X OF X

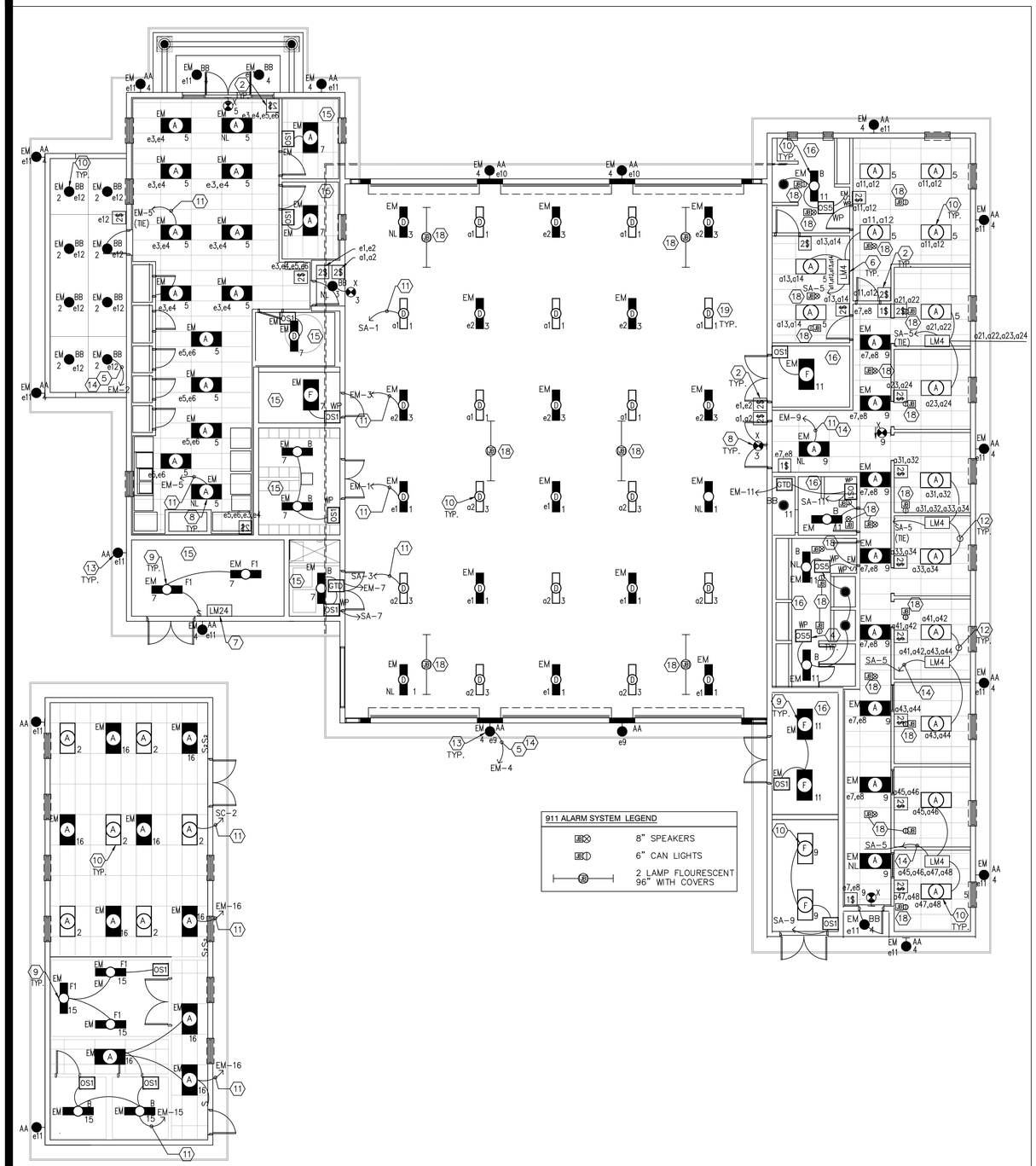

ELECTRICAL LIGHTING PLAN
SCALE: 1/8" – 1'–0"

GENERAL LIGHTING NOTES:

1. COORDINATE ALL ELECTRICAL WORK WITH ARCHITECT AND OWNER AND GENERAL CONTRACTOR PRIOR TO BID AND ROUGH–IN.
2. COORDINATE EXACT LIGHTS AND EQUIPMENT LOCATION WITH ARCHITECT AND OWNER PRIOR TO BID AND ROUGH–IN.
3. EVERY CIRCUIT AND CIRCUIT MODIFICATION SHALL BE LEGIBLY IDENTIFIED AS TO ITS CLEAR, EVIDENT, AND SPECIFIC PURPOSE OR USE, NOT LIMITED TO LIGHTS AND RECEPTACLES.
4. WHEREVER THE WORD "PROVIDE" IS USED, IT SHALL MEAN "FURNISH AND INSTALL COMPLETE AND READY FOR USE."
5. BRANCH CIRCUIT SHALL BE MINIMUM 2# 12 AND 1# 12 E.G IN 3/4" C UNLESS OTHERWISE NOTED.
6. CONNECT ALL EMERGENCY LIGHTS, EXIT SIGNS AND NIGHT LIGHTS TO EMERGENCY PANEL 'EM'.
7. ALL BRANCH CIRCUIT BREAKERS SERVING EMERGENCY, EXIT AND NIGHT LIGHT FIXTURES SHALL BE PROVIDED WITH PERMANENT LOCK ON DEVICES.
8. ALL CONDUITS SHALL BE RUN PARALLELED ABOVE THE DROP CEILING IN CLEAN AND NEAT MANNER. ALL EXPOSE CONDUITS SHALL BE PAINTED. MATCH FINISH IN THE AREA. COORDINATE WITH ARCHITECT AND OWNER FOR FINAL DIRECTIONS.

ELECTRICAL KEY NOTES: ⬡

1. PROPOSED LOCATION FOR LIGHTING CONTROL SYSTEM MASTER OVER–RIDE DIGITAL SWITCH AT CONTROL PANEL IN OFFICE, CONNECT PER MANUFACTURER'S INSTRUCTIONS. THE SWITCH SHALL TURN ON ALL LIGHTS WHICH ARE CONTROLLED BY LIGHTING CONTROL PANELS.
2. PROVIDE DIGITAL LIGHTING SWITCHES AS MANUFACTURED BY LCD WITH CONTROL ZONES AS SHOWN ON DRAWINGS. CONTROL SWITCHES SHALL PROVIDE ON–OFF AND OVER–RIDE FUNCTIONS FOR THIS SPACES HOURS OF OPERATIONS. REFER TO ELECTRICAL LIGHTING PLAN FOR DIGITAL SWITCHES LOCATIONS AND SWITCH LEGEND. COORDINATE PROGRAMMING OF THE LIGHTING CONTROL SYSTEM WITH THE OWNER.
3. NOT USED.
4. PROVIDE CEILING MOUNTED OCCUPANCY SENSOR. LOCATE AND CONNECT OCCUPANCY SENSOR PER M.F.R RECOMMENDATIONS. REFER TO OCCUPANCY SCHEDULE ON THIS SHEET AND ELECTRICAL DETAIL SHEET E4.1.
5. ROUTE HOMERUN: VIA RELAY IN LIGHTING CONTROL SYSTEM PANEL. CONTROL TO BE HOTOCELL–ON, PHOTOCELL–OFF.
6. PROVIDE SLAVE LIGHTING CONTROL PANEL WITH 4 RELAYS MANUFACTURED BY LCD OR APPROVED EQUAL. MOUNT PANEL ABOVE LAY–IN CEILING (TOTAL OF 6). REFER TO ELECTRICAL SHEET E5.2 FOR ADDITIONAL REQUIREMENTS.
7. MASTER LIGHTING CONTROL PANEL WITH 24 RELAYS MANUFACTURED BY LCD OR APPROVED EQUAL. REFER TO ELECTRICAL SHEET E5.2 FOR ADDITIONAL REQUIREMENTS.
8. NIGHT LIGHT (NL) AND EXIT SIGN SHALL BE CONNECTED DIRECT TO EMERGENCY PANEL "EM".
9. COORDINATE FINAL FIXTURE LOCATION WITH MECHANICAL EQUIPMENT AND CONTRACTOR. IF REQUIRED MAKE FIELD ADJUSTMENT.
10. PROVIDE LIGHTING FIXTURE. REFER TO LIGHTING FIXTURE SCHEDULE ON ELECTRICAL SHEET E5.1 FOR ADDITIONAL REQUIREMENTS.
11. ROUTE HOMERUN: VIA RELAY IN LIGHTING CONTROL SYSTEM PANEL. CONTROL DURING NORMAL BUSINESS HOURS. COORDINATE WITH OWNER.
12. TWO SWITCHING LEGS FROM SLAVE PANEL FOR STEP LIGHTING CONTROL (50% AND 100% LIGHT CONTROL). REFER TO PLAN FOR EXACT REQUIREMENTS.
13. EXTERIOR WALL MOUNTED LIGHT FIXTURE. MOUNT FIXTURE AT 7'–8 1/4" (C.L.–AFF). FIELD VERIFY PRIOR TO INSTALLATION.
14. ENTIRE BRANCH CIRCUIT SHALL BE 2 #10 AND 1 #10 E.G. IN 3/4"C.
15. NITE, OFFICE, ADA RESTROOM, STORAGE, BUNKER, ELECTRICAL/MECHANICAL AND DECON ROOMS SHALL BE CONNECTED TO NORMAL BRANCH CIRCUIT SA–7 AND EMERGENCY BRANCH CIRCUIT EM–7 VIA GENERATOR TRANSFER DEVICE (GTD) BY BODINE OR APPROVED EQUAL. REFER TO DETAILS ON SHEET E.4.1 FOR REQUIREMENTS.
16. MECHANICAL, BATHS AND STORAGE ROOMS SHALL BE CONNECTED TO NORMAL BRANCH CIRCUIT SA–11 AND EMERGENCY BRANCH CIRCUIT EM–11 VIA GENERATOR TRANSFER DEVICE (GTD) BY BODINE OR APPROVED EQUAL. REFER TO DETAILS ON SHEET E.4.1 FOR REQUIREMENTS.
17. MECHANICAL, BATHS SHALL BE CONNECTED TO NORMAL BRANCH CIRCUIT SC–15 AND EMERGENCY BRANCH CIRCUIT EM–15 VIA GENERATOR TRANSFER DEVICE (GTD) BY BODINE OR APPROVED EQUAL. REFER TO DETAILS ON SHEET E.4.1 FOR REQUIREMENTS.
18. FOR 911 ALARM SYSTEM, CONTRACTOR SHALL PROVIDE CONDUITS WITH PULL STRINGS AND JUNCTION BOXES. WIRING, SPEAKERS AND LIGHTING FIXTURES BY OTHERS. 911 LIGHTS SHALL BE COORDINATE WITH THE OH DOOR TRACKS.
19. CONTRACTOR TO COORDINATE LIGHTING FIXTURE TYPE (D) IN APPARATUS BAY AREA WITH THE OH DOOR MOTORS AND TRACKS.

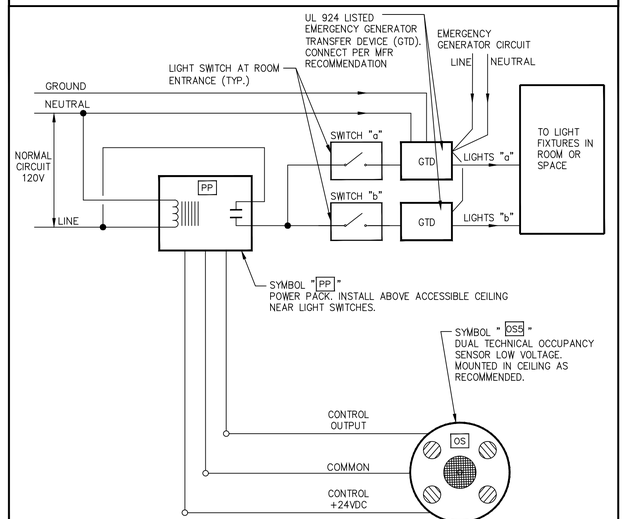

LIGHTING CONTROL DIAGRAM-CEILING MOUNTED SENSOR AND GENERATOR TRANSFER DEVICE (GTD)
NOT TO SCALE

LIGHTING CONTROL PANELS

- LM24 — MASTER CONTORL PANEL 24 RELAYS, UL924 LISTED FOR EMERGENCY LIGHTING MASTER PANEL WITH TIMECLOCK
- LM4 — SLAVE CONTORL PANEL 4 RELAYS SLAVE PANEL (NO TIMECLOCK)
- 1$ — 1–BUTTON DIGITAL SWITCH WITH OVERRIDE
- 2$ — 2–BUTTON DIGITAL SWITCH WITH OVERRIDE
- 4$ — 4–BUTTON DIGITAL SWITCH WITH OVERRIDE
- M$ — MASTER OVER–RIDE BUTTONS

SENSOR LEGEND:

- OS1 — WALL MOUNTED DUAL TECH WALL SWITCH OCCUPANCY SENSOR OCCUPANCY # WSD–PDT–WH BY SENSOR SWITCH. PROVIDE WITH MANUAL OVER RIDE SWITCH.
- OSS — CEILING MOUNTED DUAL TECH LOW VOLTAGE OCCUPANCY SENSOR WITH 2,000 SF COVERAGE #CM–PDT–10 BY SENSOR SWITCH, WITH POWER PACK (PP).

SENSOR NOTES:

1. PROVIDE SENSORS MANUFACTURED BY SENSOR SWITCH OR APPROVED EQUAL.
2. PROVIDE A POWER PACK IF NEEDED. POWER PACK IS CONTROLLED BY LOW VOLTAGE SENSOR. LOCATED PP AT ACCESSIBLE CEILING.
3. ADDITIONAL SENSORS MAY BE REQUIRED TO PROVIDE COMPLETE COVERAGE DEPENDING ON PARTITION HEIGHT/PLACEMENT, FURNITURE PLACEMENT, EQUIPMENT HEIGHT/PLACEMENT AND SHELVING HEIGHT/PLACEMENT. CONSULT MFR REPRESENTATIVE PRIOR TO ROUGH–IN.
4. SENSOR MASKING KITS MAY BE REQUIRED TO LIMIT COVERAGE DEPENDING ON YOUR REQUIREMENTS. CONSULT MFR REPRESENTATIVE PRIOR TO ROUGH–IN.
5. ALL SENSORS AND EQUIPMENT SHALL FAIL SAFE IN ON FUNCTION IN EVENT OF A DEVICE/ELECTRONICS FAILURE
6. ELECTRICAL CONTRACTOR SHALL SUBMIT TO ENGINEER FOR REVIEW AND APPROVAL A COMPLETE OCCUPANCY SENSOR PACKAGE WHICH INCLUDES SENSOR COVERAGE AND LAYOUTS IN FLOOR PLAN, RISER AND WIRING DIAGRAMS, MANUFACTURER CUT SHEETS AND INSTALLATION INSTRUCTIONS.

LIGHTING CONTROL NOTES:

1. PROVIDE LIGHTING CONTROL PANELS MANUFACTURED BY LIGHTING CONTROL DESIGN (LCD) OR APPROVED EQUAL.
2. SINGLE GANG SWITCHES WILL BE LOCATED AT SPECIFIC LOCATIONS FOR LOCAL OVERRIDE OF LIGHTING (SEE PLANS).
5. THE MASTER CONTROL PANEL SHALL BE UL924 LISTED FOR EMERGENCY LIGHTING AND FAIL SAFE IN ON FUNCTION IN EVENT OF A DEVICE/ELECTRONICS FAILURE (EMERGENCY LIGHTS SHALL OPERATE).

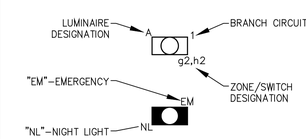

– ALL NORMAL BRANCH CIRCUITS TERMINATED AT PANEL 'SA' OR 'SC'
– ALL EMERGENCY BRANCH CIRCUITS TERMINATED AT PANEL 'EM'

LIGHT FIXTURE DESIGNATIONS
NOT TO SCALE

GRINER ENGINEERING, INC.
1628 First Avenue North
St. Petersburg, Florida 33713
Phone: (727)–822–2335
Fax: (727)–821–3361
Certificate of Authorization #3173

Date	06-15-2017
Drawn	HH
Designed	HH
EOR	JAR
Job no.	17049

CITY OF TAMPA
CONTRACT ADMINISTRATION DEPARTMENT
PLANNING AND DESIGN DIVISION
306 E. JACKSON STREET 4 NORTH
TAMPA, FLORIDA 33602
p: 813. 274. 8456 – f: 813. 274. 8080
url: www.tampagov.net

James E. Jackson, Jr. AIA, NOMA
City Architect
Edward D. Rice, AIA
Project Architect
Kevin L. Henika, AIA
Project Architect
Thomas A. Hester, Sr., AIA, NOMA
Project Architect
David R. Pagitt
Supervisor, Architectural Drafting
Kinsey C. Tillman
Drafting Technician
Jerry P. Sanders
Drafting Technician
Byron K. Thomas, LEED AP
Drafting Technician

MEP CONSULTANT
GRINER ENGINEERING, INC.
1628 1st. AVENUE NORTH
ST. PETERSBURG, FL 33713

STRUCTURAL CONSULTANT
BILLER REINHART STRUCTURAL GROUP, INC.
4014 GUNN HWY. SUITE 248
TAMPA, FL 33713

CIVIL CONSULTANT
B M CIVIL LLC
12315 WYCLIFF PLACE
TAMPA, FL 33626

LANDSCAPE CONSULTANT
DAVID CONNER & ASSOCIATES
1509 W. SWANN AVENUE,SUITE 255
TAMPA, FL 33606

FIRE STATION 23
20770 TROUT CREEK DR.
TAMPA, FL 33647

DPW FILE NUMBER

DPW NUMBER
17–c–00037

ISSUE DATE
07–28–2017

DRAWN BY

REVISIONS
△
△
△

SEAL

Jose A Rosario, P.E. FL. 74457

SCALE: 1/8" – 1'–0"

ELECTRICAL LIGHTING PLAN

SHEET NUMBER
E2.1
X OF X

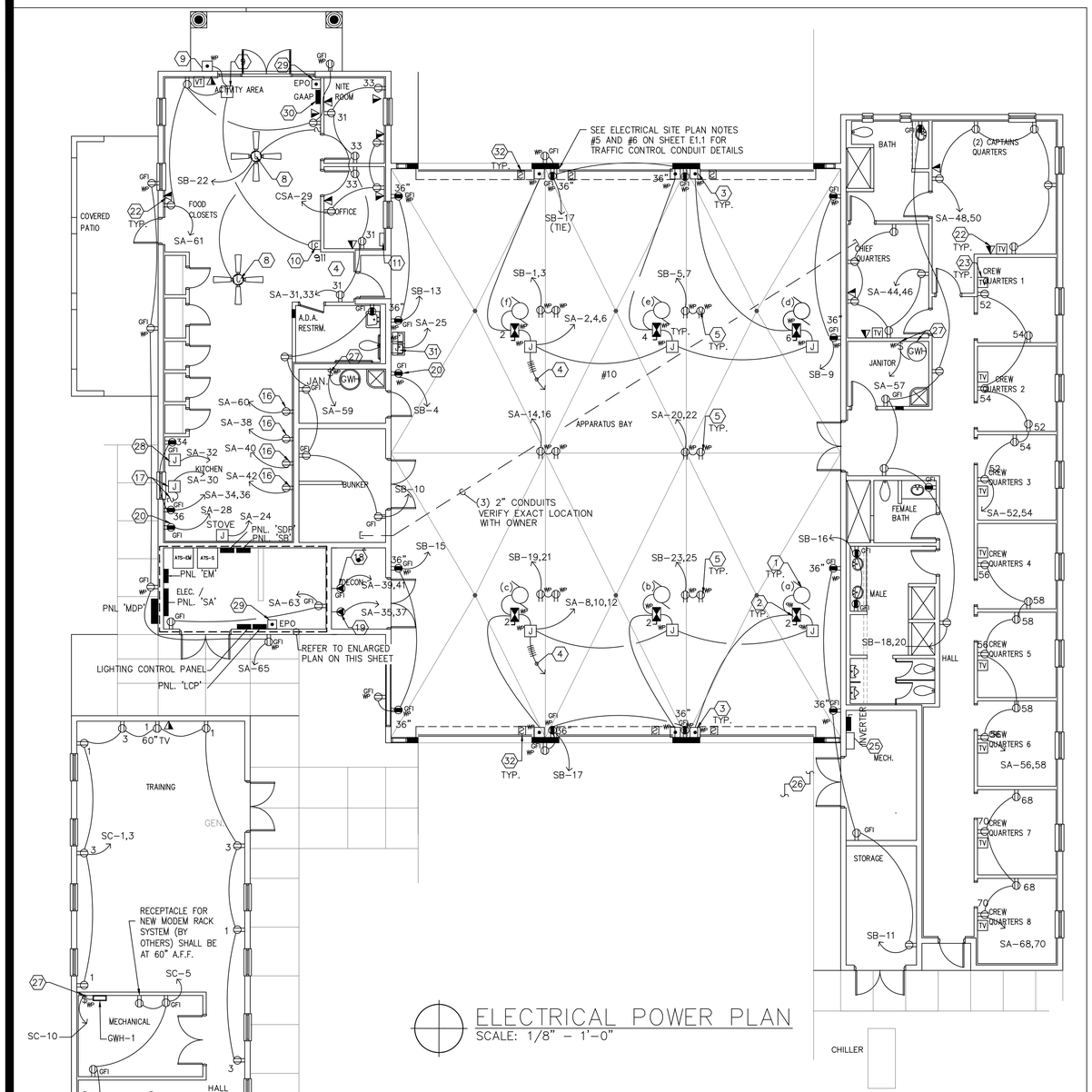

ELECTRICAL POWER PLAN
SCALE: 1/8" – 1'–0"

GENERAL POWER NOTES:

1. COORDINATE ALL ELECTRICAL WORK WITH ARCHITECT AND OWNER PRIOR TO BID AND ROUGH–IN.
2. COORDINATE EXACT DEVICE AND EQUIPMENT LOCATIONS, MOUNTING HEIGHTS AND POWER REQUIREMENTS WITH ARCHITECT/OWNER AND M.F.R CUT SHEETS PRIOR TO ROUGH–IN.
3. ALL POWER/LOW VOLTAGE OUTLETS SHALL BE LABELED WITH PANEL AND CIRCUIT NUMBER. COORDINATE WITH OWNER.
4. EVERY CIRCUIT AND CIRCUIT MODIFICATION SHALL BE LEGIBLY IDENTIFIED AS TO ITS CLEAR, EVIDENT, AND SPECIFIC PURPOSE OR USE, NOT LIMITED TO LIGHTS AND RECEPTACLES.
5. WHEREVER THE WORD "PROVIDE" IS USED, IT SHALL MEAN "FURNISH AND INSTALL COMPLETE AND READY FOR USE."
6. BRANCH CIRCUIT SHALL BE MINIMUM 2# 12 AND 1# 12 E.G IN 3/4" C UNLESS OTHERWISE NOTED.
7. ALL CONVENIENCE OUTLETS IN KITCHEN AREA TO BE GFCI.
8. REFER TO ELECTRICAL DRAWINGS AND PANEL SCHEDULES FOR WIRE SIZES REQUIREMENTS.

ELECTRICAL KEY NOTES:

1. OVERHEAD DOOR MOTOR. COORDINATE FINAL LOCATION PRIOR TO ROUGH–IN.
2. NEMA SIZE "0" REVERSING COMBINATION STARTER IN NEMA 3R ENCLOSURE. CEILING MOUNT ADJACENT TO OVERHEAD DOOR MOTOR. FUSE PER UNIT NAMEPLATE. (TYP. OF 6).
3. OVERHEAD DOOR UP–DOWN PUSH–BUTTON CONTROL STATION MOMENTARY CONTACT. FACTORY PAINT RED (SQUARE D CLASS 90001 – TYPE B) NEMA 3R ENCLOSURE SURFACE MOUNT 46"AFF. (TYP. OF 6).
4. ROUTE CONTROL CONDUCTORS IN 1/2" C TO MOMENTARY CONTACT PUSH BUTTONS IN CONTROL PANEL LOCATED AT OFFICE #113 CONNECT TO DOOR MOTOR STARTER "UP CONTACTS" ONLY. SEE CONTROL PANEL DETAIL.
5. PROVIDE 20A DUPLEX WITH SWIVEL HOOK BY HUBBELL 6'–0"AFF SUSPEND FROM J–BOX MOUNTED AT CEILING WITH #10 "SO" DROP CORD WITH STRAIN RELIEF AT J–BOX AND OUTLET. COORDINATE FINAL LOCATION AND REQUIREMENTS WITH ARCHITECT AND OWNER PRIOR TO ROUGH–IN.
6. PROVIDE EXTERIOR 150 KW GENERATOR, 208/120V, 3PH, DUAL FUEL SOURCE (GAS AND LP) WITH OVERSIZE ALTERNATOR. SEE ELECTRICAL RISER DIAGRAM ON SHEET E3.1. FOR REQUIREMENTS.
7. PROVIDE FINAL CONNECTION TO GENERATOR PANEL. THE GENERATOR PANEL IS PROVIDED BY THE GENERATOR MANUFACTURER, AND SERVES THE GENERATOR BATTERY CHARGER, HEATERS AND LIGHT/RECEPTACLES.
8. PROVIDE 48"PADDLE FAN (HUNTER OR EQUIVALENT) WITH LISTED OUTLET BOX SECURELY MOUNTED TO STRUCTURE. COORDINATE EXACT LOCATION, COLOR AND STYLE WITH ARCHITECT PRIOR TO ROUGH–IN. PRE–WIRE SHALL INCLUDE SWITCH LEG FOR FAN.
9. 120V – 10 VAC TRANSFORMER (EDWARDS #590) MOUNT ABOVE AND PUSH BUTTON (EDWARDS #603) MOUNTED FLUSH IN WALL 50"+AFF.
10. DOOR CHIME 10 VAC (EDWARDS C210W) MOUNTED AT 84" AFF. EXTEND 24V WIRING TO CHIME TRANSFORMER AND PUSH BUTTON. REFER TO NOTE 9.
11. JUNCTION BOX MOUNT IN WALL FOR LIGHTS, BELLS AND OVERHEAD DOOR MOTORS. PROVIDE FLEXIBLE CONNECTIONS TO CONTROL PANEL IN DESKTOP. COORDINATE EXACT LOCATION PRIOR TO ROUGH–IN. SEE CONTROL PANEL DETAIL AND SCHEDULE ON SHEET E5.1.
12. PROVIDE 8'W X 8'H X 3/4" THICK PLYWOOD BACKBOARD WITH BOTTOM AT 18" AFF, PAINT ALL SIDES AND EDGES WITH FIRE RETARDANT PAINT OR PROVIDE FIRE TREATED PLYWOOD. PROVIDE #1/0 CU GROUND TIED INTO BUILDING ELECTRODE GROUNDING SYSTEM.
13. PROVIDE (2)–2" EMPTY CONDUIT WITH PULL–WIRE TO 5' OUTSIDE PROPERTY LINE FOR INCOMING TELEPHONE SERVICE AND CITY COMPUTER SYSTEM. COORDINATE EXACT ROUTING OF CONDUIT WITH LOCAL TELEPHONE COMPANY AND OWNER PRIOR TO ROUGH–IN AND MAKE FIELD ADJUSTMENTS AS NECESSARY.
14. PROVIDE (1)–2" EMPTY CONDUIT WITH PULL–WIRE TO 5' OUTSIDE PROPERTY LINE FOR INCOMING SPECTRUM BROADBAND SERVICE. COORDINATE EXACT ROUTING OF CONDUIT WITH SPRCTRUM COMPANY PRIOR TO ROUGH–IN AND MAKE FIELD ADJUSTMENTS AS NECESSARY.
15. 3 PHASE DISCONNECT SAFETY SWITCH, METER AND CT CABINET PER UTILITY COMPANY SPECS.
16. PROVIDE RECEPTACLE FOR REFRIGERATOR. COORDINATE EXACT LOCATION WITH OWNER PRIOR TO ROUGH–IN.
17. PROVIDE FINAL CONNECTION TO GARBAGE DISPOSAL WITH 1/2" FLEXIBLE METAL CONDUIT. PROVIDE A SINGLE POLE SWITCH ADJACENT TO SINK ABOVE COUNTER FOR CONTROL. COORDINATE WITH PLUMBING CONTRACTOR AND DRAWINGS.
18. PROVIDE 20 AMP, 230 VOLT WASHER RECEPTACLE WITH A SINGLE GANG STAINLESS STEEL COVER PLATE MOUNTED AT 48" AFF. EXTEND 4 #12 IN 3/4" CONDUIT TO PANEL.
19. PROVIDE 30 AMP, 230 VOLT DRYER RECEPTACLE WITH A SINGLE GANG STAINLESS STEEL COVER PLATE MOUNTED AT 48" AFF, EXTEND 4 #10 IN 3/4" CONDUIT TO PANEL.
20. PROVIDE 20 AMP RECEPTACLE FOR ICE MACHINE. COORDINATE EXACT LOCATION AND EXTEND 3#12 IN 3/4" CONDUIT TO PANEL.
21. NEW JUNCTION BOX FOR 911 CIRCUITS FROM 'EM' PANEL. RUN 1 #12, 1 #12 EG –1/2" C AND EXTEND AS NEEDED.
22. PROVIDE A SINGLE GANG BOX AT 18" AND EXTEND A 3/4" CONDUIT TO ACCESSIBLE CEILING SPACE AND TERMINATE WITH A PLASTIC BUSHING. FURNISH WITH PULLSTRING FOR TELCOMM CABLES.
23. PROVIDE A SINGLE GANG BOX AT 70" AND EXTEND A 3/4" C FROM JUNCTION BOX TO ACCESSIBLE CEILING SPACE AND TERMINATE WITH A PLASTIC BUSHING. FURNISH WITH PULLSTRING FOR TV CABLE.
24. NEW 60A., 4 POLE, NEMA 4X DISCONNECT SWITCH MOUNT ADJACENT TO ELECTRIC METER FOR PHOTOVOLTAIC SYSTEM. COORDINATE EXACT REQUIREMENTS WITH UTILITY COMPANY AND PHOTOVOLTAIC SYSTEM INSTALLER.
25. PROVIDE INVERTERS FOR PHOTOVOLTAIC SYSTEM.
26. COORDINATE ELECTRICAL EQUIPMENT IN ELECTRICAL/MECHANICAL ROOMS WITH MECHANICAL CONTRACTOR AND DRAWINGS PRIOR TO ROUGH–IN. CONTRACTOR SHALL FIELD VERIFY THE EXACT EQUIPMENT LAYOUTS PRIOR TO ORDERING OF THE EQUIPMENT AND PROVIDE CLEARANCE AS REQUIRED PER NEC.
27. PROVIDE WP HP RATED DISCONNECT AND FINAL CONNECTION TO GAS WATER HEATER. COORDINATE FINAL REQUIREMENTS WITH PLUMBING CONTRACTOR AND DRAWINGS PRIOR TO ROUGH–IN.
28. PROVIDE FINAL CONNECTION TO DISHWASHER WITH 1/2" FLEXIBLE METAL CONDUIT. EXTEND 3 #12 IN 3/4" CONDUIT TO PANEL.
29. GENERATOR EMERGENCY STOP SWITCH, LOCATE ADJACENT TO FIRE ALARM CONTROL PANEL IN NEMA 3R BOX, ENGRAVED PLATE WITH 1/4" WHITE ENGRAVED LETTERS ON RED LAMINATED PLASTIC UNDER STOP SWITCH TO READ "GENERATOR EMERGENCY STOP". SURFACE MOUNT SWITCH 4'–6". REFER TO SHEET E3.1 FOR ADDITIONAL REQUIREMENTS.
30. GENERATOR ANNUNCIATOR PANEL. REFER TO SHEET E3.1 FOR ADDITIONAL REQUIREMENTS. COORDINATE FINAL LOCATION WITH AUTHORITY HAVING JURISDICTION PRIOR TO ROUGH–IN.
31. PROVIDE FINAL CONNECTION TO ELECTRICAL WATER COOLER. COORDINATE EXACT LOCATION AND REQUIREMENTS WITH PLUMBING CONTRACTOR. REFER TO PLUMBING SCHEDULE.
32. PROVIDE WP JUNCTION BOX AT 12" AFF AND RACEWAY FOR GARAGE DOOR SWITCHES. COORDINATE FINAL LOCATION AND REQUIREMENTS WITH GARAGE DOOR INSTALLER AND OWNER.

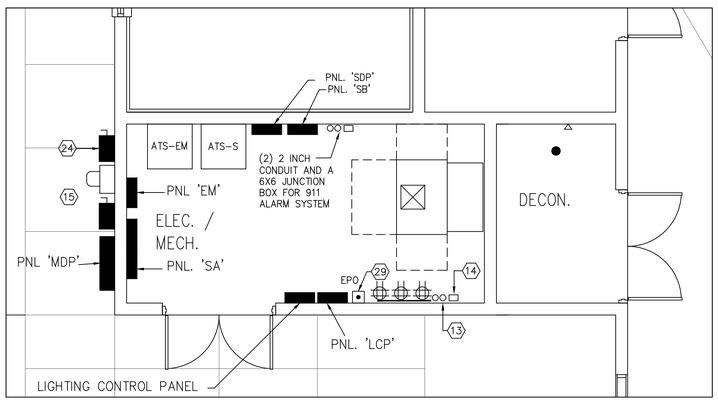

ENLARGED MECH/ELECTRICAL ROOM (109)
SCALE: 1/4" – 1'–0"

GRINER ENGINEERING, INC.
1628 First Avenue North
St. Petersburg, Florida 33713
Phone: (727)-822-2335
Fax: (727)-821-3361
Certificate of Authorization #3173

Date	06-15-2017
Drawn	HH
Designed	HH
EOR	JAR
Job no.	17049

CITY OF TAMPA
CONTRACT ADMINISTRATION DEPARTMENT
PLANNING AND DESIGN DIVISION
306 E. JACKSON STREET 4 NORTH
TAMPA, FLORIDA 33602
p: 813. 274. 8456 – f: 813. 274. 8080
url: www.tampagov.net

James E. Jackson, Jr. AIA, NOMA
City Architect
Edward D. Rice, AIA
Project Architect
Kevin L. Henika, AIA
Project Architect
Thomas A. Hester, Sr., AIA, NOMA
Project Architect
David R. Pagitt
Supervisor, Architectural Drafting
Kinsey C. Tillman
Drafting Technician
Jerry P. Sanders
Drafting Technician
Byron K. Thomas, LEED AP
Drafting Technician

MEP CONSULTANT
GRINER ENGINEERING, INC.
1628 1st. AVENUE NORTH
ST. PETERSBURG, FL 33713

STRUCTURAL CONSULTANT
BILLER REINHART STRUCTURAL GROUP, INC.
4014 GUNN HWY. SUITE 248
TAMPA, FL 33713

CIVIL CONSULTANT
B M CIVIL LLC
12315 WYCLIFF PLACE
TAMPA, FL 33626

LANDSCAPE CONSULTANT
DAVID CONNER & ASSOCIATES
1809 W. SWANN AVENUE,SUITE 255
TAMPA, FL 33606

FIRE STATION 23
20770 TROUT CREEK DR.
TAMPA, FL 33647

DPW FILE NUMBER

DPW NUMBER
17–C–00037

ISSUE DATE
07–28–2017

DRAWN BY

REVISIONS
3 02–21–2014

SEAL

Jose A Rosario, P.E. FL. 74457

SCALE: 1/8" – 1'–0"

ELECTRICAL POWER PLAN

SHEET NUMBER
E2.2
X OF X

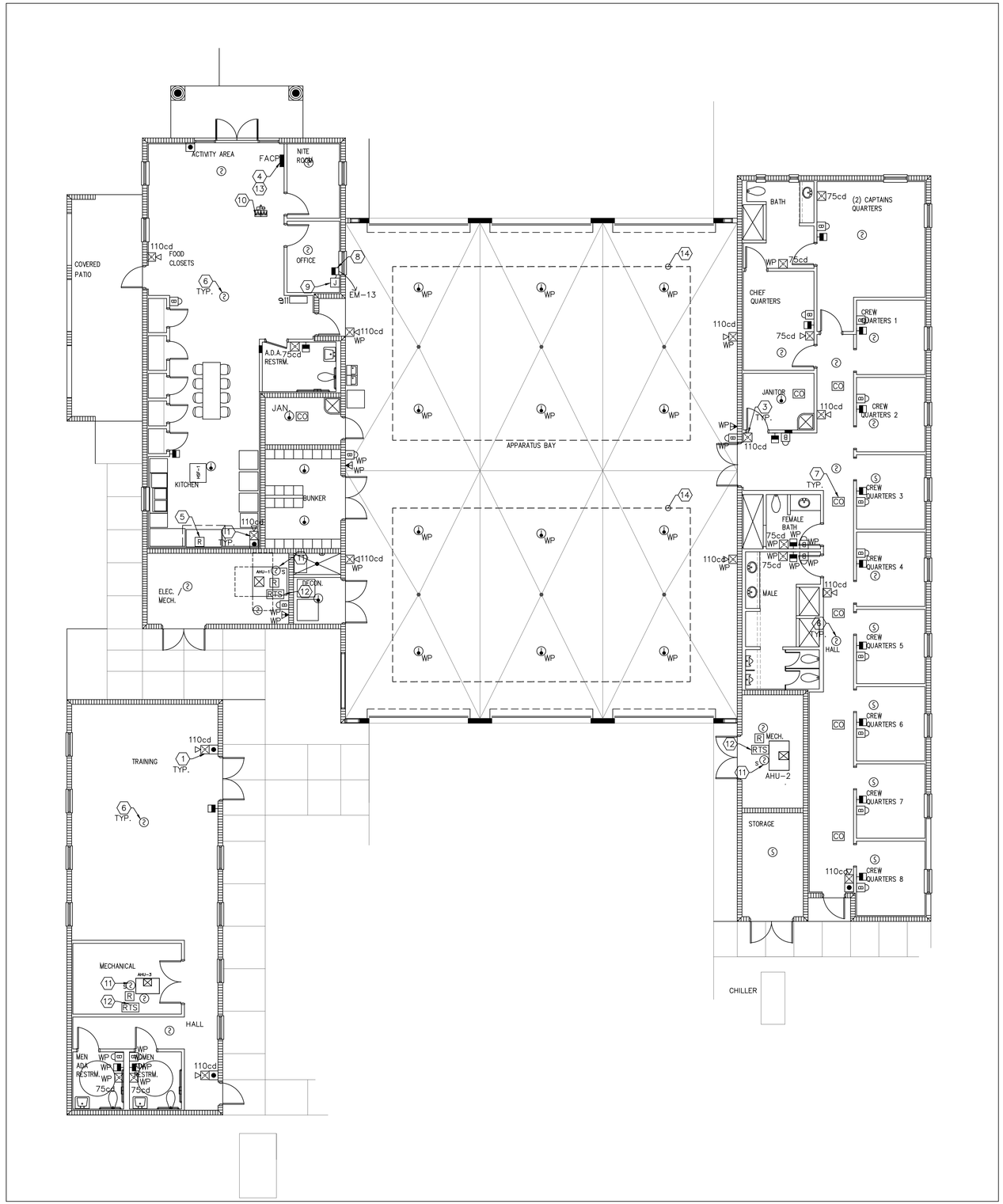

ELECTRICAL SYSTEM PLAN
SCALE: 1/8" – 1'–0"

SYSTEM KEY NOTES:

1. PROVIDE FIRE ALARM AUDIO (HORN)/VISUAL (STROBE) DEVICE MINIMUM 75cd UNLESS NOTE OTHERWISE.
2. PROVIDE FIRE ALARM PULL STATION. CONNECT TO FIRE ALARM CONTROL PANEL.
3. PROVIDE FIRE ALARM VISUAL (STROBE) DEVICE MINIMUM 75cd UNLESS OTHERWISE NOTED.
4. PROVIDE FIRE ALARM CONTROL PANEL. COORDINATE FINAL LOCATION REQUIREMENTS WITH AUTHORITY HAVING JURISDICTION (AHJ).
5. PROVIDE FIRE ALARM CONNECTION TO HOOD SUPPRESSION SYSTEM. COORDINATE WITH HOOD INSTALLER, MECHANICAL CONTRACTOR, ARCHITECT AND OWNER. REFER TO SHEET E2.4 FOR ADDITIONAL REQUIREMENTS.
6. PROVIDE FIRE ALARM SMOKE DETECTOR. CONNECT TO FIRE ALARM CONTROL PANEL.
7. PROVIDE CARBON MONOXIDE DETECTOR PER NFPA 720. THE CARBON MONOXIDE DETECTOR SHALL BE LOCATED OUTSIDE OF EACH SEPARATE SLEEPING AREA IN THE IMMEDIATE VICINITY OF THE BEDROOMS.
8. INTERCOM CONSOLE, DESK MOUNTED BY AIPHONE OR APPROVED BY OWNER AND ENGINEER EQUAL. COORDINATE ALL ASSOCIATED WORK AND REQUIREMENTS WITH OWNER, INTERCOM VENDOR, MFR CUT SHEETS AND INSTRUCTIONS. REFER TO TYPICAL INTERCOM RISER DIAGRAM ON THIS SHEET.
9. PROVIDE JUNCTION BOX MOUNTED FLUSH IN WALL UNDER COUNTER. PROVIDE FLEXIBLE CONNECTION TO INTERCOM CONSOLE ON DESKTOP. REFER TO KEY NOTE #8.
10. PROVIDE FIRE ALARM CONNECTION TO FLOW AND TEMPER SWITCHES. COORDINATE EXACT LOCATION AND QUALITY WITH SPRINKLER CONTRACTOR AND SHOP DRAWINGS PRIOR TO ROUGH-IN.
11. PROVIDE DUCT SMOKE DETECTOR IN SUPPLY AIR DUCT WITH RELAY TO SHUT DOWN HVAC UNIT. DUCT MOUNTED SMOKE DETECTOR TO BE FURNISHED BY THE FIRE ALARM CONTRACTOR, INSTALLED IN THE DUCTWORK BY THE MECHANICAL CONTRACTOR AND CONNECTED TO THE FIRE ALARM SYSTEM BY THE FIRE ALARM ELECTRICAL CONTRACTOR.
12. PROVIDE AND LOCATE REMOTE TEST STATION (RTS) AT 48" AFF AT NEAREST COLUMN OR WALL. LABEL WITH ASSOCIATED HVAC UNIT NAME.
13. INTERLOCK SECURITY SYSTEM WITH FIRE ALARM. ELECTRICALLY LOCKED EGRESS DOOR TO RELEASE UPON FIRE ALARM ONLY TO EGRESS OUTSIDE (INGRESS TO THE BUILDING SHALL NOT BE ALLOWED).
14. PROVIDE HEAT DETECTORS WITH FIX TEMPERATURE IN APPARATUS BAY. THE HEAT DETECTORS SHALL BE CONNECTED TO FIRE ALARM MONITORING MODULE IN A ZONE.

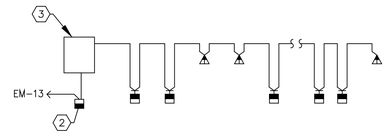

TYPICAL INTERCOM RISER DIAGRAM
NOT TO SCALE

NOTES:

1. REFER TO FLOOR PLANS FOR EXACT DEVICE QUANTITY AND LOCATIONS.
2. INTERCOM CONSOLE, DESK MOUNTED BY AIPHONE OR APPROVED BY OWNER AND ENGINEER EQUAL.
3. PROVIDE 6" X 8" X 3" JUNCTION BOX MOUNTED FLUSH IN WALL UNDER COUNTER OR AS DIRECTED BY ARCHITECT AND OWNER PROVIDE FLEXIBLE CONNECTION TO INTERCOM CONSOLE ON DESKTOP.
4. COORDINATE ELECTRICAL REQUIREMENTS WITH THE APPROVED BY OWNER INTERCOM VENDOR PRIOR TO ROUGH-IN.

GRINER ENGINEERING, INC.
1628 First Avenue North
St. Petersburg, Florida 33713
Phone: (727)-822-2335
Fax: (727)-821-3361
Certificate of Authorization #3173

Date	06-15-2017
Drawn	HH
Designed	HH
EOR	JAR
Job no.	17049

CITY OF TAMPA
CONTRACT ADMINISTRATION DEPARTMENT
PLANNING AND DESIGN DIVISION
306 E. JACKSON STREET 4 NORTH
TAMPA, FLORIDA 33602
p: 813. 274. 8456 – f: 813. 274. 8080
url: www.tampagov.net

James E. Jackson, Jr. AIA, NOMA
City Architect
Edward D. Rice, AIA
Project Architect
Kevin L. Henika, AIA
Project Architect
Thomas A. Hester, Sr., AIA, NOMA
Project Architect
David R. Pagitt
Supervisor, Architectural Drafting
Kinsey C. Tillman
Drafting Technician
Jerry P. Sanders
Drafting Technician
Byron K. Thomas, LEED AP
Drafting Technician

MEP CONSULTANT
GRINER ENGINEERING, INC.
1628 1st. AVENUE NORTH
ST. PETERSBURG, FL 33713

STRUCTURAL CONSULTANT
BILLER REINHART STRUCTURAL GROUP, INC.
4014 GUNN HWY. SUITE 248
TAMPA, FL 33713

CIVIL CONSULTANT
B M CIVIL LLC
12315 WYCLIFF PLACE
TAMPA, FL 33626

LANDSCAPE CONSULTANT
DAVID CONNER & ASSOCIATES
1509 W. SWANN AVENUE,SUITE 255
TAMPA, FL 33606

FIRE STATION 23
20770 TROUT CREEK DR.
TAMPA, FL 33647

DPW FILE NUMBER

DPW NUMBER
17-C-00037

ISSUE DATE
07-28-2017

DRAWN BY

REVISIONS

SEAL

Jose A Rosario, P.E. FL. 74457

SCALE: 1/8" – 1'–0"

ELECTRICAL SYSTEM PLAN

SHEET NUMBER
E2.3
X OF X

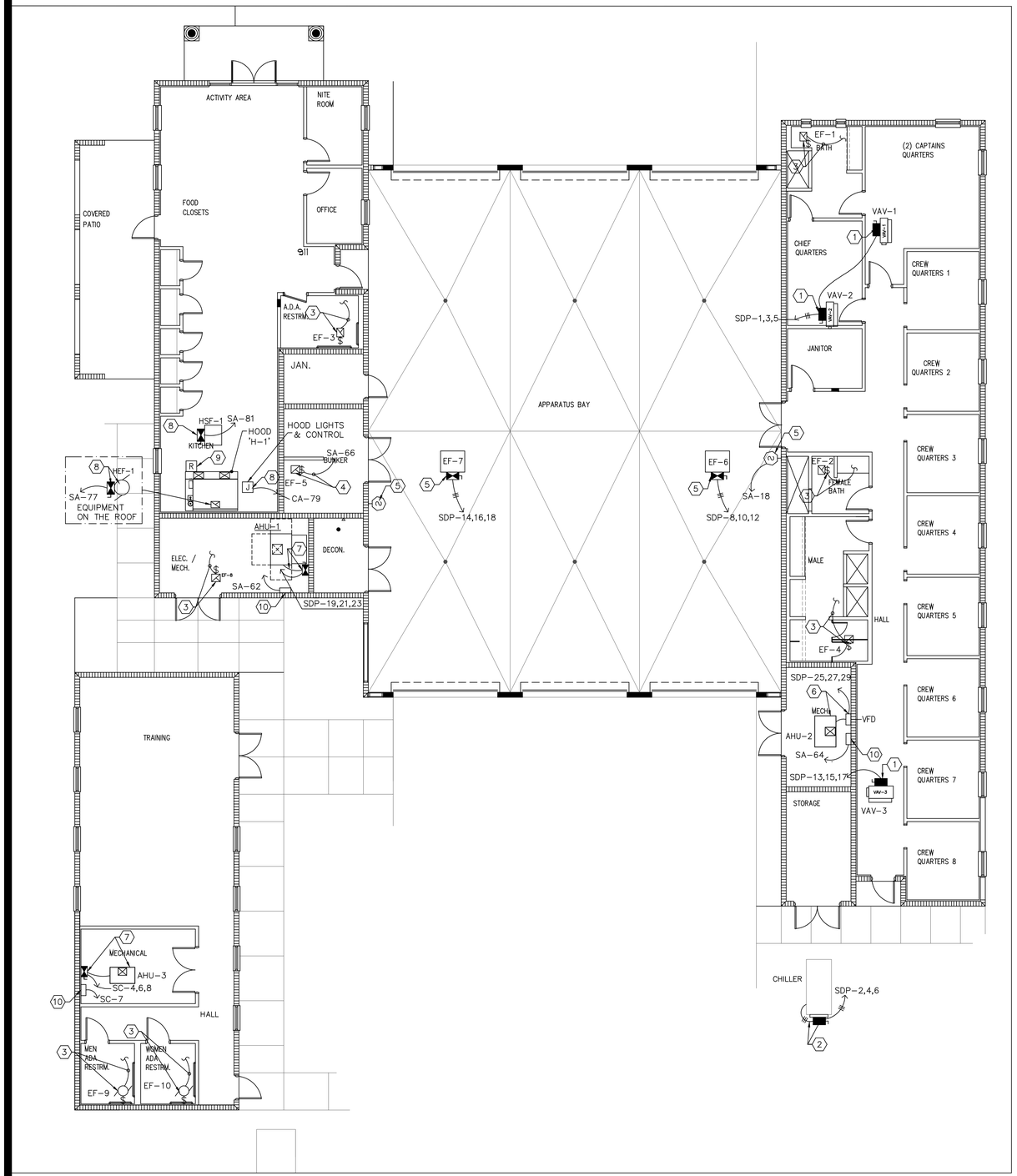

ELECTRICAL HVAC KEY NOTES:

1. PROVIDE FINAL CONNECTION TO HVAC VARIABLE AIR VOLUME (VAV) AND FACTORY INSTALLED FUSED DISCONNECT. REFER TO ELECTRICAL HVAC SCHEDULE. COORDINATE ALL REQUIREMENTS WITH MECHANICAL CONTRACTOR AND DRAWINGS.
2. PROVIDE FUSED DISCONNECT AND FINAL CONNECTION TO HVAC CHILLER UNIT (CH-1). PROVIDE UNISTRUT SUPPORT FOR DISCONNECT, REFER TO ELECTRICAL HVAC SCHEDULE. COORDINATE ALL REQUIREMENTS WITH MECHANICAL CONTRACTOR AND DRAWINGS.
3. PROVIDE FINAL CONNECTION TO EXHAUST FAN. PROVIDE RELAY AND INTERLOCK EXHAUST FAN WITH LIGHT SWITCH SERVING THIS ROOM. REFER TO ELECTRICAL HVAC SCHEDULE. COORDINATE ALL REQUIREMENTS WITH MECHANICAL CONTRACTOR AND DRAWINGS.
4. PROVIDE FINAL CONNECTION TO EXHAUST FAN. EXHAUST FAN SHALL RUN CONTINUOUSLY. REFER TO ELECTRICAL HVAC SCHEDULE. COORDINATE ALL REQUIREMENTS WITH MECHANICAL CONTRACTOR AND DRAWINGS.
5. PROVIDE FINAL CONNECTION TO EXHAUST FAN EF-6 AND EF-7. PROVIDE RELAYS AND INTERLOCK EXHAUST FANS WITH CARBON MONOXIDE SENSORS IN APPARATUS BAY. REFER TO ELECTRICAL HVAC SCHEDULE. COORDINATE ALL REQUIREMENTS WITH MECHANICAL CONTRACTOR AND DRAWINGS.
6. PROVIDE FINAL CONNECTION TO VFD AND AIR HANDLING UNIT. REFER TO ELECTRICAL HVAC SCHEDULE. COORDINATE ALL REQUIREMENTS WITH MECHANICAL CONTRACTOR AND DRAWINGS.
7. PROVIDE DISCONNECT/STARTER AND FINAL CONNECTION TO AIR HANDLING UNIT. REFER TO ELECTRICAL HVAC SCHEDULE. COORDINATE ALL REQUIREMENTS WITH MECHANICAL CONTRACTOR AND DRAWINGS.
8. PROVIDE FINAL CONNECTION TO KITCHEN HOOD CABINET, CONTROL SWITCH AND FANS. REFER TO CONTROL MFR PANEL DIAGRAM AND HOOD FAN AND DISC. SWITCHES SCHEDULE. INTERLOCK KITCHEN HOOD, FANS AND WITH FIRE ALARM SYSTEM. CONFIRM FINAL REQUIREMENTS WITH KITCHEN HOOD INSTALLER, AND MECHANICAL CONTRACTOR.
9. PROVIDE RELAY TO SHUT DOWN GAS SOLENOID. FIELD VERIFY EXACT GAS SOLENOID LOCATION. INTERLOCK WITH KITCHEN HOOD AND FIRE ALARM SYSTEM.
10. PROVIDE FINAL CONNECTION TO HVAC CONTROL. PROVIDE CIRCUIT BREAKER ON THE PANEL WITH PERMANENT LOCK OFF DEVICE

HOOD GENERAL NOTES:

1. PROVIDE FINAL CONNECTION TO KITCHEN HOOD CABINET, CONTROL SWITCH AND FAN. REFER TO CONTROL MFR PANEL DIAGRAM AND HOOD FAN AND DISC. SWITCHES SCHEDULE. INTERLOCK KITCHEN HOOD WITH FIRE ALARM SYSTEM
2. PROVIDE RELAY TO SHUT DOWN GAS SOLENOID. FIELD VERIFY EXACT GAS SOLENOID LOCATION. INTERLOCK WITH KITCHEN HOOD AND FIRE ALARM SYSTEM.
3. SHUNT TRIP NOTES : EXTEND 3 #12 TO SHUNT TRIP BREAKERS FROM DRY CONTACTS (N.O.) UTILIZE CONTROL CIRCUIT FOR POWER SOURCE AND EXTEND 3 #12 TO SHUT DOWN GAS SOLENOID.
4. THIS DRAWING SHALL BE USED AS AN INSTRUMENT OF REFERENCE BY ALL TRADES AND CONTRACTORS. ALL TRADES SHALL VERIFY THE INFORMATION AS SHOWN ON THESE PLANS.
5. ALL NATIONAL, STATE, AND LOCAL CODES SHALL APPLY.
6. ALL NECESSARY ELECTRICAL DISCONNECTS, SHUNT TRIP BREAKERS, AND STARTERS TO BE FURNISHED AND INSTALLED BY EC, UNLESS PROVIDED AS A STANDARD COMPONENT OF THE EQUIPMENT BY THE MANUFACTURER.
7. ALL ELECTRICAL ITEMS SUPPLIED UNDER EXHAUST HOOD- TO SHUT DOWN WITH SHUNT TRIP TIED IN TO HOOD SYSTEM.
8. KITCHEN HOOD SHALL BE WIRED IN STRICT CONFORMANCE WITH THE MANUFACTURER'S INSTRUCTIONS AND/OR SHOP DRAWINGS.
9. STARTERS, RELAYS, HEATERS, AND SWITCHES REQUIRED FOR EXHAUST FAN ARE TO BE PROVIDED AND INSTALLED BY THE ELECTRICAL CONTRACTOR.

KITCHEN HOOD SEQUENCE OF OPERATION:

NORMAL: SUPPLY AND EXHAUST FANS ARE OPERATIONAL.

FIRE ALARM: UPON ACTIVATION OF HOOD FIRE SUPPRESSION SYSTEM, THE SUPPLY FAN SHALL BE "OFF" AND THE EXHAUST FAN SHALL BE "OFF".

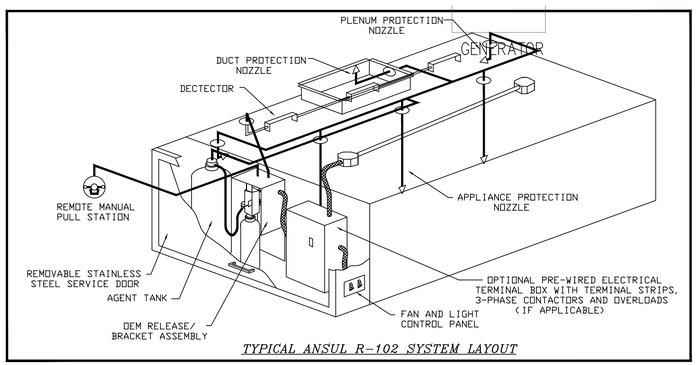

TYPICAL ANSUL R-102 SYSTEM LAYOUT

ELECTRICAL HVAC PLAN
SCALE: 1/8"=1'-0"

CITY OF TAMPA
CONTRACT ADMINISTRATION DEPARTMENT
PLANNING AND DESIGN DIVISION
306 E. JACKSON STREET 4 NORTH
TAMPA, FLORIDA 33602
p: 813. 274. 8456 - f: 813. 274. 8080
url: www.tampagov.net

James E. Jackson, Jr. AIA, NOMA
City Architect
Edward D. Rice, AIA
Project Architect
Kevin L. Henika, AIA
Project Architect
Thomas A. Hester, Sr., AIA, NOMA
Project Architect
David R. Pagitt
Supervisor, Architectural Drafting
Kinsey C. Tillman
Drafting Technician
Jerry P. Sanders
Drafting Technician
Byron K. Thomas, LEED AP
Drafting Technician

MEP CONSULTANT
GRINER ENGINEERING, INC.
1628 1st. AVENUE NORTH
ST. PETERSBURG, FL 33713

STRUCTURAL CONSULTANT
BILLER REINHART STRUCTURAL GROUP, INC.
4014 GUNN HWY. SUITE 248
TAMPA, FL 33713

CIVIL CONSULTANT
B M CIVIL LLC
12315 WYCLIFF PLACE
TAMPA, FL 33626

LANDSCAPE CONSULTANT
DAVID CONNER & ASSOCIATES
1509 W. SWANN AVENUE,SUITE 255
TAMPA, FL 33606

FIRE STATION 23
20770 TROUT CREEK DR.
TAMPA, FL 33647

DPW FILE NUMBER

DPW NUMBER
17-C-00037

ISSUE DATE
07-28-2017

DRAWN BY

REVISIONS

SEAL

Jose A Rosario, P.E. FL. 74457

SCALE: 1/8" - 1'-0"

ELECTRICAL HVAC PLAN

SHEET NUMBER
E2.4
X OF X

GRINER
GRINER ENGINEERING, INC.
1628 First Avenue North
St. Petersburg, Florida 33713
Phone: (727)-822-2335
Fax: (727)-821-3361
Certificate of Authorization #3173

Date	06-15-2017
Drawn	HH
Designed	HH
EOR	JAR
Job no.	17049

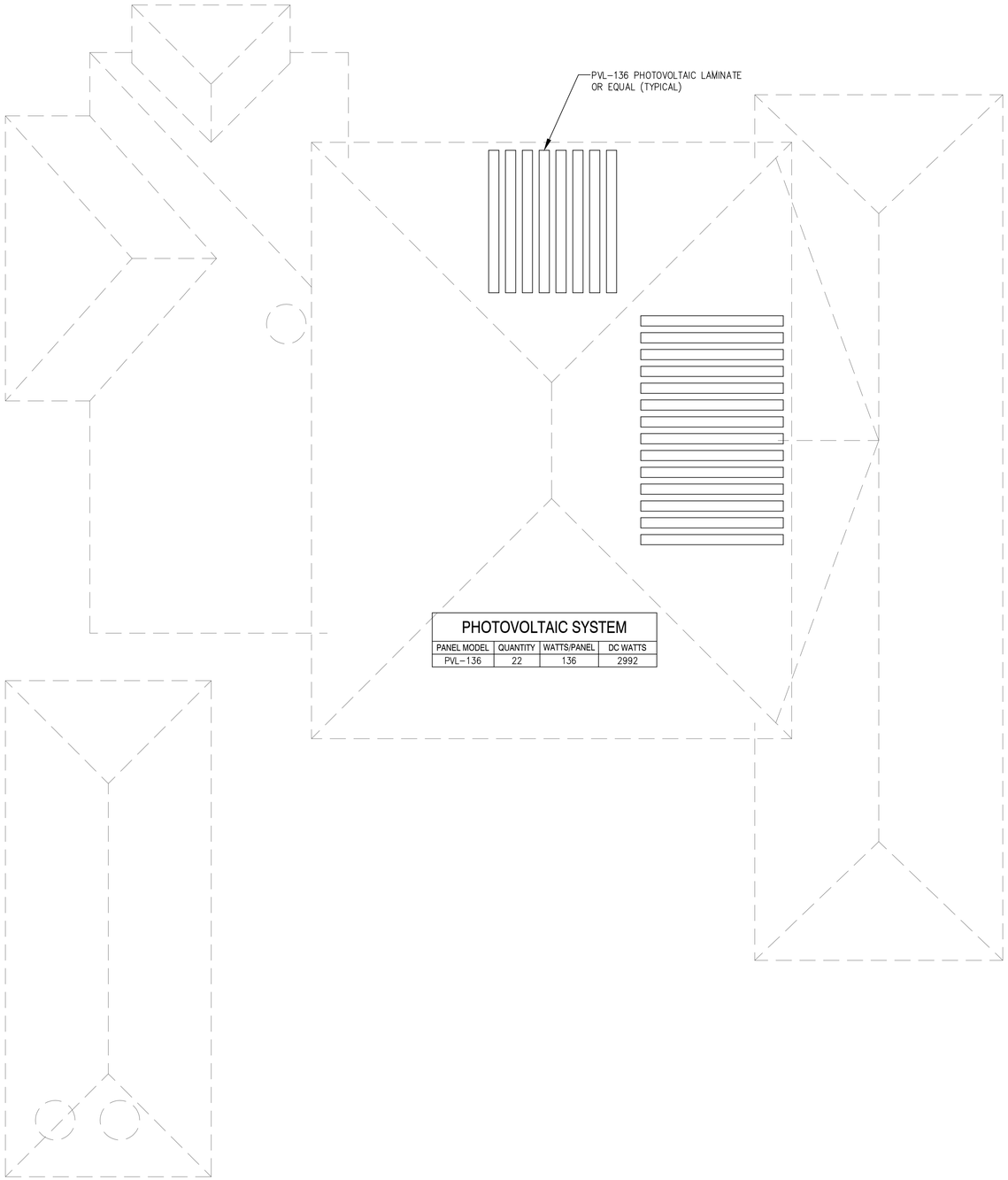

PHOTOVOLTAIC SYSTEM

PANEL MODEL	QUANTITY	WATTS/PANEL	DC WATTS
PVL-136	22	136	2992

PHOTOVOLTAIC SCHEMATIC NOTES: (-)

1. SQUARE "D" TYPE PANEL BOARD. FURNISH AND INSTALL ON FRONT COVER A RED NAMEPLATE WITH WHITE ENGRAVED LETTERS STATING:
   PROVIDE LABEL FOR:
   WARNING – ELECTRICAL SHOCK HAZARD–PANEL HAS THREE INPUT POWER SUPPLIES (UTILITY, GENERATOR AND PHOTOVOLTAIC). DISCONNECT ALL CIRCUITS BREAKERS FROM ALL POWER SOURCES BEFORE ANY WORK.
2. NEW 60A., 4 POLE, NEMA 4X DISCONNECT SWITCH. MOUNT ADJACENT TO ELECTRIC METER. REFER TO ELECTRICAL SHEET E2.2 FOR EXACT LOCATION.
   DO NOT BOND AC NEUTRAL TO GND. AT THIS LOCATION.
3. UL INVENTER RATED 3,000W DC/600VDC AND UL1741/IEEE1547 LABELED.

   FURNISHED "PV" INVERTER WITH INTEGRATED LOAD–BREAK RATED AC & DC DISCONNECT SWITCH.

   DO NOT BOND AC NEUTRALS TO GND. AT THIS LOCATION
4. 60A. 2 POLE NEMA 3R–COMBI–SWITCH. PROVIDE WITH PERMANENT LOCK ON DEVICE. PROVIDE 10A, 600V DC MIDGET FUSES (1 TOTAL) FURNISHED WITH COMBI–SWITCH.
5. TYPICAL PHOTOVOLTAIC SOLAR LAMINATE PVL SERIES PVL–136 AND PVL–68 BY UNI–SOLAR OR APPROVED EQUAL. FURNISH WITH JUNCTION BOX AND MC TYPE 4 CONNECTION CABLES (TYPICAL). REFER TO ROOF LAYOUT FOR EXACT LOCATION AND LAYOUT. CONSULT MFR FOR REQUIREMENTS.
6. 1 NO. 2 SOLID TINNED BARE COPPER CONDUCTOR. BOND TO 3/4 INCH X 20FT. COPPER CLAD GROUND ROD. BONDING CONNECTIONS TO GROUND ROD SHALL BE EXOTHERMIC TYPE WELDS (CADWELD) OR EQUAL APPROVED .
7. 1 #2 SOLID TINNED BARE COPPER CONDUCTOR TO COMBINER BOXES.

GENERAL PHOTOVOLTAIC NOTES:

1. ALL WORK SHALL COMPLY WITH FLORIDA BUILDING CODE, NATIONAL ELECTRICAL CODE, AND LOCAL ORDINANCE.
2. CONTRACTOR TO ENSURE THE AVAILABILITY OF THE WHOLE EQUIPMENT REQUIRED TO ACHIEVE THE INTENT OF SOLAR SYSTEM PRIOR TO START ANY WORK, IF NOT THE CONTRACTOR SHALL ASK FOR ADDENDUM REVISION TO CANCEL THE WHOLE SYSTEM.
3. CONTRACTOR TO SUBMIT ALL REQUIRED DOCUMENTS FOR PERMITTING AND FOR UTILITY COMPANY REVIEW.
4. P.V. EQUIPMENTS, WIRES, ETC SHALL BE SIZED PER P.V. CONTRACTOR'S EQUIPMENT MANUFACTURERS RECOMMENDATIONS. CONTRACTOR SHALL SUBMIT SHOP DRAWINGS OF THE P.V. SYSTEM WILL ALL CALCULATIONS, SIZING, EQUIPMENT, LOCATIONS FOR OWNER AND ENGINEER REVIEW AFTER APPROVING BY THE AUTHORITY HAVING JURISDICTION AND UTILITY COMPANY.
5. CONTRACTOR SHALL COORDINATE WITH POWER COMPANY FOR FINAL AND EXACT WORK/MATERIALS INSTALLATION REQUIREMENTS FOR PHOTOVOLTAIC SYSTEM.
4. CONTRACTOR SHALL PAY UTILITY FEE FOR ALL WORK PHOTOVOLTAIC WORK, AND ELECTRIC PHOTOVOLTAIC SYSTEM METERING.
5. REFER TO PHOTOVOLTAIC MANUFACTURER INSTALLATION INSTRUCTIONS, CUT SHEETS, AND REQUIREMENTS FOR EXACT EQUIPMENT LAYOUTS, INSTALLATION AND COMMISSIONING.

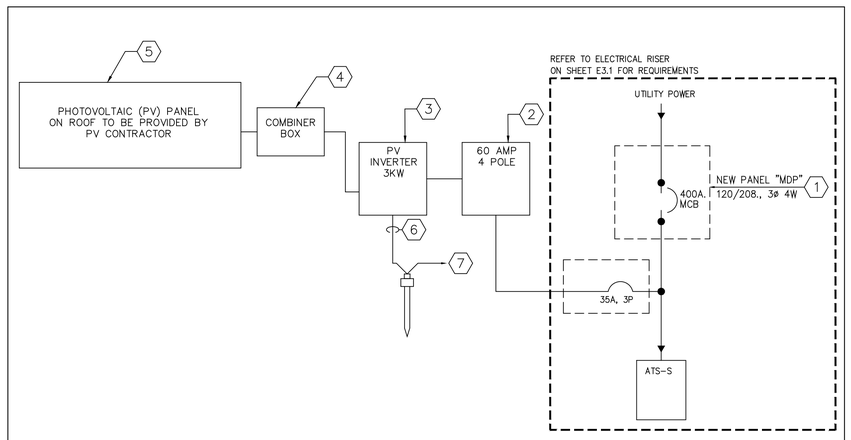

PHOTOVOLTAIC SCHEMATIC RISER

NOT TO SCALE

ELECTRICAL ROOF PLAN

SCALE: 1/8" – 1'–0"

CITY OF TAMPA
CONTRACT ADMINISTRATION
DEPARTMENT
PLANNING AND DESIGN DIVISION

306 E. JACKSON STREET 4 NORTH
TAMPA, FLORIDA 33602
p: 813. 274. 8456 – f: 813. 274. 8080
url: www.tampagov.net

James E. Jackson, Jr. AIA, NOMA
City Architect
Edward D. Rice, AIA
Project Architect
Kevin L. Henika, AIA
Project Architect
Thomas A. Hester, Sr., AIA, NOMA
Project Architect
David R. Pagitt
Supervisor, Architectural Drafting
Kinsey C. Tillman
Drafting Technician
Jerry P. Sanders
Drafting Technician
Byron K. Thomas, LEED AP
Drafting Technician

MEP CONSULTANT
GRINER ENGINEERING, INC.
1628 1st. AVENUE NORTH
ST. PETERSBURG, FL 33713

STRUCTURAL CONSULTANT
BILLER REINHART
STRUCTURAL GROUP, INC.
4014 GUNN HWY. SUITE 248
TAMPA, FL 33713

CIVIL CONSULTANT
B M CIVIL LLC
12315 WYCLIFF PLACE
TAMPA, FL 33626

LANDSCAPE CONSULTANT
DAVID CONNER & ASSOCIATES
1509 W. SWANN AVENUE,SUITE 255
TAMPA, FL 33606

FIRE STATION 23
20770 TROUT CREEK DR.
TAMPA, FL 33647

DPW FILE NUMBER

DPW NUMBER
17–C–00037

ISSUE DATE
07–28–2017

DRAWN BY

REVISIONS

SEAL

Jose A Rosario, P.E. FL. 74457

SCALE: 1/8" – 1'–0"

ELECTRICAL
ROOF PLAN

SHEET NUMBER
E2.5
X OF X

GRINER
GRINER ENGINEERING, INC.
1628 First Avenue North
St. Petersburg, Florida 33713
Phone: (727)-822-2335
Fax: (727)-821-3361
Certificate of Authorization #3173

Date	06-15-2017
Drawn	HH
Designed	HH
EOR	JAR
Job no.	17049

GENERAL FLORIDA BUILDING CODE NOTES:

ALL ELECTRICAL WORK SHALL COMPLY WITH FLORIDA BUILDING CODE, COMMERCIAL ENERGY EFFICIENCY

505.7.3 VOLTAGE DROP.

505.7.3.1 FEEDERS AND COSTUMER OWNED SERVICE CONDUCTORS.
FEEDER AND CUSTOMER OWNED SERVICE CONDUCTORS SHALL BE SIZED FOR A MAXIMUM VOLTAGE DROP OF 2% AT DESIGN LOAD.

505.7.3.2 BRANCH CIRCUITS.
BRANCH CIRCUIT CONDUCTORS SHALL BE SIZED FOR A MAXIMUM VOLTAGE DROP OF 3% AT DESIGN LOAD.

505.7.4 COMPLETION REQUIREMENTS

505.7.4. DRAWINGS.
CONSTRUCTION DOCUMENTS SHALL REQUIRE THAT WITHIN 30 DAYS AFTER THE DATE OF SYSTEM ACCEPTANCE, RECORD DRAWINGS OF THE ACTUAL INSTALLATION SHALL BE PROVIDED TO THE BUILDING OWNER, INCLUDING:
1. A SINGLE–LINE DIAGRAM OF THE BUILDING ELECTRICAL DISTRIBUTION SYSTEM AND
2. FLOOR PLANS INDICATING LOCATION AND AREA SERVED FOR ALL DISTRIBUTION.

505.7.4.2 MANUALS.
CONSTRUCTION DOCUMENTS SHALL REQUIRE THAT AN OPERATING MANUAL AND MAINTENANCE MANUAL BE PROVIDED TO THE BUILDING OWNER. THE MANUALS SHALL INCLUDE, AT A MINIMUM, THE FOLLOWING:
1. SUBMITTAL DATA STATING EQUIPMENT RATING AND SELECTED OPTIONS FOR EACH PIECE OF EQUIPMENT REQUIRING MAINTENANCE.
2. OPERATION MANUALS AND MAINTENANCE MANUALS FOR EACH PIECE OF EQUIPMENT REQUIRING MAINTENANCE. REQUIRED ROUTINE MAINTENANCE ACTIONS SHALL BE CLEARLY IDENTIFIED.
3. NAMES AND ADDRESSES OF AT LEAST ONE QUALIFIED SERVICE AGENCY.

505.7.5 ELECTRICAL MOTORS.
ELECTRICAL MOTORS SHALL COMPLY WITH THE REQUIREMENTS OF THE ENERGY POLICY ACT OF 2005.

GENERAL ELECTRICAL RISER NOTES:

1. ELECTRICAL CONTRACTOR SHALL COORDINATE ALL ELECTRICAL WORK WITH ARCHITECT, OWNER AND GENERAL CONTRACTOR PRIOR TO BID AND START ANY WORK. NO EXCEPTION.
2. ELECTRICAL CONTRACTOR SHALL SUBMIT A PROPOSE CONSTRUCTION SCHEDULE WITH INFORMATION REGARDING ANY POSSIBLE ELECTRICAL OUTAGE TO BUILDING DURING CONSTRUCTION.

POWER DOWN TIME NOTES:

1. PROVIDE TEMPORARY BACK UP POWER AS REQUIRED OR/AND NEEDED DURING THE CONSTRUCTION.

UTILITY COMPANY COORDINATION NOTES:

1. ELECTRICAL CONTRACTOR SHALL COORDINATE ALL ELECTRICAL WORK WITH TECO (POWER COMPANY). CONTACT Eng. Brock Blackmore (TECO) AT 813–228–1008 FOR ALL ELECTRICAL UTILITY SERVICE WORK AND REQUIREMENTS. CONTRACTOR SHALL INCLUDE ALL FEES TO PROVIDE POWER TO THE BUILDING IN HIS BID PROPOSAL. NO EXCEPTION.

FAULT CURRENT AND SELECTIVE COORDINATION STUDIES NOTES:

1. THE ELECTRICAL CONTRACTOR SHALL SUBMIT TO ENGINEER A LETTER FROM UTILITY COMPANY FOR THE AVAILABLE FAULT CURRENT AT THE SECONDARY TERMINALS AT THE INSTALLED UTILITY TRANSFORMER WITH PANEL SUBMITTALS. IF A LETTER IS NOT PROVIDED WITH THE PANEL SUBMITTALS, THE SUBMITTALS WILL BE REJECTED WITHOUT REVIEW. NO EXCEPTION.
2. CONTRACTOR SHALL PROVIDE FAULT CURRENT AND SELECTIVE COORDINATION STUDY FOR ENTIRE ELECTRICAL SYSTEM PER NFPA 70 AND IEEE. REFER TO ELECTRICAL SPECIFICATION FOR REQUIREMENTS.

ELECTRICAL RISER NOTES:

MISCELLANEOUS NOTES:

- UT1 — UTILITY COMPANY PAD HANDHOLE AT THE POLE MOUNTED TRANSFORMER. SECONDARY VOLTAGE TO BE 120/208Y 3 PHASE, 4 WIRE WYE. FIELD VERIFY EXACT LOCATION. CONTACT AND COORDINATE ALL ELECTRICAL WORK WITH UTILITY COMPANY AND OWNER PRIOR TO BID AND START ANY WORK. NO EXCEPTION. REFER TO POWER COMPANY GENERAL NOTE ON THIS SHEET FOR ADDITIONAL REQUIREMENTS.
- M500 — 3 PHASE METER AND CT CABINET PER UTILITY COMPANY SPEC.
- D500 — 3 PHASE DISCONNECT SAFETY SWITCH 600A 3P BETWEEN CT CABINET AND MAIN SERVICE PANEL (MDP).
- SPD1 — SURGE PROTECTIVE DEVICE TYPE 1, UL 1449, 3RD EDITION, NEMA 3R, 100KA. EXTEND 5 #4 IN 1–1/2"C AS STRAIGHT AS POSSIBLE (MAX 2'–0").
- SPD2 — SURGE PROTECTIVE DEVICE TYPE 2, UL 1449, 3RD EDITION, NEMA 3R, 100KA, BY LEA. EXTEND 5#4 IN 1–1/2"C AS STRAIGHT AS POSSIBLE (MAX 2'–0").
- DPV — PROVIDE 60A, 4 POLE, NEMA 4X STAINLESS STEEL DISCONNECT SWITCH MOUNTED ADJACENT TO ELECTRIC METER FOR PHOTOVOLTAIC SYSTEM. REFER TO ELECTRICAL SHEET E2.5 FOR PHOTOVOLTAIC SYSTEM REQUIREMENTS. CONFIRM FINAL REQUIREMENTS WITH THE UTILITY COMPANY.
- MDP — MAIN DISTRIBUTION PANEL 3PH, 208/120V. REFER TO ELECTRICAL PANEL SCHEDULE FOR REQUIREMENTS.
- P1 — ELECTRICAL PANEL, 3PH, 208/120V. REFER TO ELECTRICAL PANEL SCHEDULE FOR REQUIREMENTS.
- L1 — PROVIDE LABEL: WARNING – ELECTRICAL SHOCK HAZARD–PANEL HAS THREE INPUT POWER SUPPLIES (UTILITY, GENERATOR AND PHOTOVOLTAIC). DISCONNECT ALL CIRCUITS BREAKERS FROM ALL POWER SOURCES BEFORE ANY WORK.
- B35 — PROVIDE ENCLOSED CIRCUIT BREAKER 35 AMPS, 3P, 42KAIC RATED FOR PHOTOVOLTAIC SYSTEM WITH SHUNT TRIP MECHANISM. INTERLOCK SHUNT TRIP WITH ATS CONTACT. SHUNT TRIP TO BE ACTIVATED UPON TRANSFER TO GENERATOR POWER.

GROUNDING/BOUNDING NOTES:

- G1 — 3/0 CU GROUND ELECTRODE CONDUCTOR IN 3/4" CONDUIT.
- G2 — 3/4" X 20' LONG COPPER CLAD GROUND. ALL CLAMPS SUITABLE FOR DIRECT BURIAL OR EXOTHERMIC WELD PER NEC 250.53.
- G3 — EXTEND THE GROUND ELECTRODE SYSTEM TO A REBAR IN THE BUILDING FOUNDATION AND BUILDING STEEL. REBAR SHALL BE CONTINUOUS 20' LENGTH, #4 MINIMUM AND ENCASED IN A MINIMUM 2" OF CONCRETE PER NEC 250.52 (3).
- G4 — BOND THE METALLIC COLD WATER PIPE TO THE GROUND ELECTRODE SYSTEM.
- G5 — EXTEND A #1 GROUND ELECTRODE CONDUCTOR TO THE BUILDING TELEPHONE TERMINAL CABINET OR BOARD. PROVIDE A GROUND BAR AT THE TELEPHONE CABINET OR BOARD.
- G7 — EXTEND A #3/0 IN 1" CONDUIT TO BUILDING LIGHTNING PROTECTION.
- G8 — BOND METER TO GROUND ELECTRODE SYSTEM WITH A #1 CU GEC IN 1" CONDUIT.
- G9 — 3/0 CU GROUND CONDUCTOR IN 1" CONDUIT.
- G10 — PROVIDE COOPER GROUND BUSS 20" X 4" X 1/4" THICK ERICO MODEL #EGBA1442ONN COMPLETE WITH INSULATOR MOUNTED BRACKET. NO HOLES. PROVIDE CONNECTORS AND BOLT HOLES AS REQUIRED. MOUNT ADJACENT TO MAIN SWITCHBOARD OR AS SHOWN ON THE ELECTRICAL DRAWINGS.

GENERATOR NOTES:

- GS1 — PROVIDE EMERGENCY GENERATOR LEVEL 1, GAS/LP (DUAL SOURCES) FUELED, 180KW, 3PH, 120/208V, (WYE) 60HZ, WITH OVERSIZE ALTERNATOR, 150 AMPS AND 500 AMPS UNIT MOUNTED LSI CIRCUIT BREAKERS WITH SHUNT TRIP COIL, CERTIFIED BY THE ENVIRONMENTAL PROTECTION AGENCY (EPA) WITH CRITICAL GRADE SOUND ALUMINUM ENCLOSURE, PF=0.8 BY KOHLER OR GENERAC CAT AND ONAN EQUAL. VERIFY WITH GENERATOR MANUFACTURER FOR EXACT LAYOUT AND CLEARANCE AND SITE CONDITIONS PRIOR TO ORDERING
- GS2E — 150 A, 4 POLE, NEMA 1 AUTOMATIC TRANSFER SWITCH WITH BYPASS ISOLATION, SURFACE MOUNTED, 50KA. THE TRANSFER SWITCH AND GENERATOR SHALL BE SUPPLIED AND SERVICED BY A SINGLE COMPANY. THE TRANSFER SWITCH SHALL BE PROVIDED WITH INTEGRAL SURGE PROTECTIVE DEVICE.
- GS2C — 500 A, 4 POLE, NEMA 1 AUTOMATIC TRANSFER SWITCH WITH BYPASS ISOLATION, SURFACE MOUNTED, 50KA. THE TRANSFER SWITCH AND GENERATOR SHALL BE SUPPLIED AND SERVICED BY A SINGLE COMPANY. THE TRANSFER SWITCH SHALL BE PROVIDED WITH INTEGRAL SURGE PROTECTIVE DEVICE.
- GS3 — GENERATOR START RELAY. REFER TO SPECIFICATION AND GENERATOR MANUFACTURER RECOMMENDATION AND INSTRUCTION.
- GS3E — EMERGENCY LIGHTING CONTROL RELAY. COORDINATE WITH GENERATOR AND LIGHTING CONTROL MANUFACTURERS. EXTEND 3/4" C TO EMERGENCY LIGHTING CONTROL PANEL.
- GS4 — 3 #12 IN 1/2" C TO GENERATOR CONTROL PANEL.
- GS5 — GENERATOR EMERGENCY STOP SWITCHES (ONE IN ELECTRICAL ROOM AND ONE ADJACENT TO FACP IN NEMA 3R BOX. PROVIDE 1/4" WHITE ENGRAVED LETTERS ON RED LAMINATED PLASTIC UNDER STOP SWITCH TO READ "GENERATOR EMERGENCY STOP". SURFACE MOUNT SWITCH 4'–6".
- GS6 — PROVIDE GENERATOR ALARM REMOTE ANNUNCIATOR (GARA) PANEL. COORDINATE FINAL LOCATION WITH OWNER AND AHJ AND EXTEND (1)–1"C WITH WIRING PER MANUFACTURER REQUIREMENTS.
- GS7 — BOND NEUTRAL TO GROUND AT THE GENERATOR (SEPARATE DERIVE SYSTEM). PROVIDE COMPLETE GROUND/BOND FOR A SEPARATE DERIVE SYSTEM PER NPFA 70 – NATIONAL ELECTRIC CODE.
- GS8 — PROVIDE CONCRETE PAD. DIMENSIONS TO BE 12" WIDER THAN GENERATOR FOOT PRINT.
- GS9 — THE GENERATOR ENCLOSURE SHALL BE SOUND ATTENUATED (SOUND ATTENUATION LEVEL: 60 dBA REDUCTION AT 12'–0") (FREE FIELD) ALUMINUM CONSTRUCTION OUTDOOR WEATHER PROTECTIVE ENCLOSURE PACKAGE FOR STANDBY GENERATOR SET, LISTED AND CERTIFIED TO 150 MPH WIND, CAPACITY, MEETS ASCE 7–05, WIND RESISTANCE.
- GS10 — EMERGENCY SHUNT TRIP FOR MAIN CIRCUIT BREAKER OF THE PHOTOVOLTAIC SYSTEM. COORDINATE WITH GENERATOR AND PV SYSTEM INSTALLER.
- GS11 — GENERATOR PRE–WIRED PANEL 'G' 100 MCB, 120/208V, 1PH PROVIDED BY GENERATOR VENDOR

FEEDER SCHEDULES:

- 500.S — (SERVICE– 500 AMPS) (2) SETS OF 4 #350 KCMIL IN 2–1/2" C.
- 500 — (FEEDER – 400 AMPS) (2) SETS OF 4 #250, 1 #2 E.G. IN 2–1/2" C.
- 400 — (FEEDER – 400 AMPS) (2) SETS OF 4 #3/0 AND 1 #3 E.G. IN 2" C.
- 200 — (FEEDER – 200 AMPS) 4 #3/0, AND 1 #6 EG. IN 2" C
- 150 — (FEEDER – 150 AMPS, 1PH) 4 #1/0 AND 1 #6 E.G. IN 2" C
- 100 — (FEEDER – 100 AMPS) 4 #1 AND 1 #6 E.G. IN 1–1/2" C
- 100.G — (FEEDER – 100 AMPS, 1PH) 3 #1 AND 1 #6 E.G. IN 1–1/2" C
- 60 — (FEEDER – 60 AMPS) 4 #1/0 AND 1 #6 E.G. IN 1–1/2" C
- 50 — (FEEDER – 50 AMPS) 4 #6 AND 1 #8 E.G. IN 1" C
- 35 — (FEEDER – 35 AMPS) 3 #8 AND 1 #8 E.G. IN 3/4" C, THE FINAL WIRING DETERMINATION SHALL BE CONFIRMED WITH PHOTOVOLTAIC SHOP DRAWINGS.

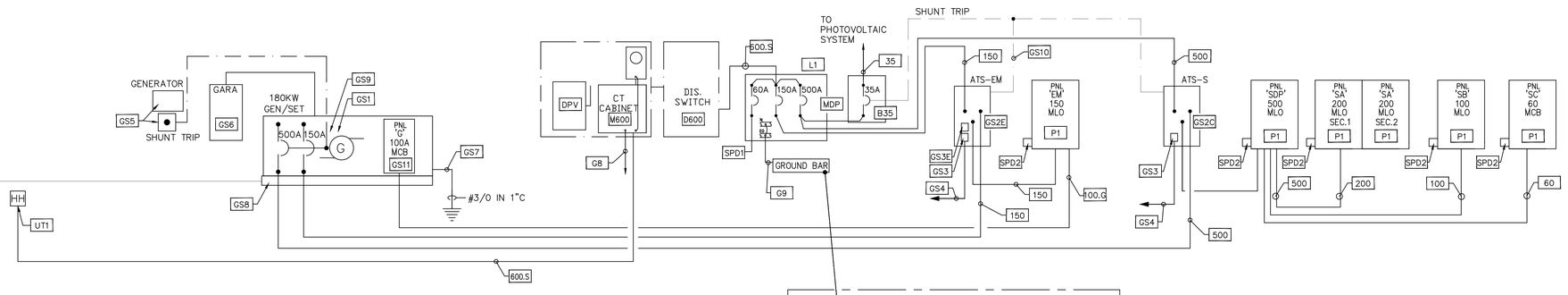

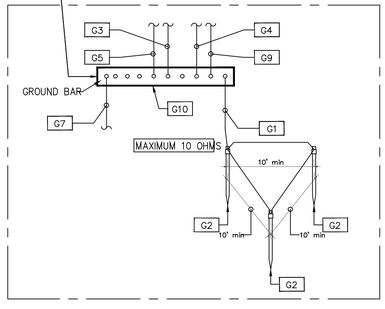

FAULT CURRENT

UTILITY TRANSFORMER VOLTAGE		208 V
ASSUMED TRANSFORMER SIZE		150 KVA
ASSUMED AFC AT TRASFRORMER		28596 AMPS
BUS	AVAILABLE FAULT CURRENT	MINIMUM PANEL AIC
MAIN 'MDP'	28596	42000
PANEL 'EM'	14875	22000
PANEL 'SDP'	14875	22000
PANEL 'SA'	14467	22000
PANEL 'SB'	14467	22000
PANEL 'SC'	13698	22000

ELECTRICAL RISER DIAGRAM
SCALE: N.T.S

CITY OF TAMPA
CONTRACT ADMINISTRATION DEPARTMENT
PLANNING AND DESIGN DIVISION
306 E. JACKSON STREET 4 NORTH
TAMPA, FLORIDA 33602
p: 813. 274. 8456 – f: 813. 274. 8080
url: www.tampagov.net

James E. Jackson, Jr. AIA, NOMA
City Architect
Edward D. Rice, AIA
Project Architect
Kevin L. Henika, AIA
Project Architect
Thomas A. Hester, Sr., AIA, NOMA
Project Architect
David R. Pagitt
Supervisor, Architectural Drafting
Kinsey C. Tillman
Drafting Technician
Jerry P. Sanders
Drafting Technician
Byron K. Thomas, LEED AP
Drafting Technician

MEP CONSULTANT
GRINER ENGINEERING, INC.
1628 1st. AVENUE NORTH
ST. PETERSBURG, FL 33713

STRUCTURAL CONSULTANT
BILLER REINHART STRUCTURAL GROUP, INC.
4014 GUNN HWY. SUITE 248
TAMPA, FL 33713

CIVIL CONSULTANT
B M CIVIL LLC
12315 WYCLIFF PLACE
TAMPA, FL 33626

LANDSCAPE CONSULTANT
DAVID CONNER & ASSOCIATES
1509 W. SWANN AVENUE,SUITE 255
TAMPA, FL 33606

FIRE STATION 23
20770 TROUT CREEK DR.
TAMPA, FL 33647

DPW FILE NUMBER

DPW NUMBER
17–C–00037

ISSUE DATE
07–28–2017

DRAWN BY

REVISIONS

SEAL

Jose A Rosario, P.E. FL. 74457

SCALE: N.T.S.

ELECTRICAL RISER DIAGRAM

SHEET NUMBER
E3.1
X OF X

GRINER
GRINER ENGINEERING, INC.
1628 First Avenue North
St. Petersburg, Florida 33713
Phone: (727)-822-2335
Fax: (727)-821-3361
Certificate of Authorization #3173

Date	06-15-2017
Drawn	HH
Designed	HH
EOR	JAR
Job no.	17049

PANEL MDP

SURFACE MOUNTED
120/208 VOLT 3 PHASE
4 WIRE WITH GROUND AND ISOLATED GROUND
SERVICE ENTRANCE RATED

600A MCB
NEMA 1
(1) AIC

WIRE SIZE	COND. SIZE	LOAD TYPE	CKT. NO.	DESCRIPTION	BREAKER TRIP	POLE	VOLT	A	B	C	BREAKER VOLT	POLE	TRIP	DESCRIPTION	CKT. NO.	LOAD TYPE	COND. SIZE	WIRE SIZE
			1	REFER TO RISER DIAGRAM				40067							2	M		REFER TO RISER DIAGRAM
			3	SURGE PROTECTIVE DEVICE 1	60	3	208		40116		208	3	500	MAIN #1 PANEL 'SDP'	4	M		
			5							40116					6	M		
		L	7	REFER TO RISER DIAGRAM				6584							8			
		L	9	MAIN #2 PANEL 'EM'	150	3	208		8010		208	3	60	SPARE (FUTURE MAIN #3)	10			
		L	11							7335					12			
			13	EQUIPPED SPACE											14			
			15		3	208					208	3		EQUIPPED SPACE	16			
			17												18			
				CONNECTED VA				46651	48126	47451								
				SYSTEM VOLTS				120/208V, 3 PHASE										
				PHASE AMPS				389	401	395								

LOAD TYPE		CONNECTED	NEC DEMAND	DEMAND LOAD	
L	LIGHTING	21929	1.25	27411.3	VA
R	RECEPTACLES	0	1	0	VA
AC	AIR CONDITIONING	0	0	0	VA
H	HEATING	0	0	0	VA
M	MISC. NON-CONTINUOUS	120299	1	120299	VA
C	CONTINUOUS	0	1.25	0	VA
K	KITCHEN	0	0.65	0	VA
			TOTAL	147710	VA
		120/208V, 3 PHASE		410	AMPS

PANEL SDP

SURFACE MOUNTED
120/208 VOLT 3 PHASE
4 WIRE WITH GROUND

LOCATED IN ELECTRICAL ROOM

500A MLO
NEMA 1
(1) AIC

WIRE SIZE	COND. SIZE	LOAD TYPE	CKT. NO.	DESCRIPTION	BREAKER TRIP	POLE	VOLT	A	B	C	BREAKER VOLT	POLE	TRIP	DESCRIPTION	CKT. NO.	LOAD TYPE	COND. SIZE	WIRE SIZE
		H	1	REFER TO EL. HVAC SCHEDULE				1334	8886					REFER TO EL. HVAC SCHEDULE	2	H		
		H	3	VAV-1/VAV-2 *(3 KW)/ (1 KW)	20	3	208		1334	8886	208	3	200	CH-1	4	H		
		H	5							1334	8886				6	H		
			7	SPARE	20	3	208	2050							8	M		REFER TO EL. HVAC SCHEDULE
			9						2050		208	3	40	EF-6 (2) (5.0 HP)	10	M		
			11							2050					12	M		
		H	13	REFER TO EL. HVAC SCHEDULE				3667	2050						14	M		
		H	15	VAV-3 (11 KW)	40	3	208		3666	2050	208	3	40	EF-7 (2) (5.0 HP)	16	M		
		H	17							3666	2050				18	M		
		M	19	REFER TO EL. HVAC SCHEDULE				690							20	H		REFER TO EL. HVAC SCHEDULE
		M	21	AHU-1 (2) (1.5 HP)	20	3	208		690		208	3	35	SPARE	22	H		
		M	23							690					24	H		
		M	25	EQUIPPED SPACE				1280							20			
		M	27	AHU-2 (2) (3.0 HP)	30	3	208		1280		208	3		EQUIPPED SPACE	22			
		M	29							1280					24			
		M	31	RISER DIAGRAM				2520							32			
		M	33	PANEL 'SC'	60	3	208		1910		208	3	100	SPARE	34			
		M	35							1410					36			
		M	37	RISER DIAGRAM				13010	4580						38	M		REFER TO RISER DIAGRAM
		M	39	PANEL 'SA'	200	3	208		13210	5040	208	3	100	PANEL 'SB'	40	M		
		M	41							13940	4810				42	M		
				CONNECTED VA				40067	40116	40116								
				SYSTEM VOLTS				120/208V, 3 PHASE										
				PHASE AMPS				334	334	334								

LOAD TYPE			CONNECTED	NEC DEMAND	DEMAND LOAD	
L	LIGHTING		0	1.25	0	VA
R	RECEPTACLES		0	1	0	VA
AC	AIR CONDITIONING		0	0	0	VA
H	HEATING	IS LARGER	41659	1	41659	VA
M	MISC. NON-CONTINUOUS		78640	1	78640	VA
C	CONTINUOUS		0	1.25	0	VA
K	KITCHEN		0	0.65	0	VA
				TOTAL	120299	VA
			120/208V, 3 PHASE		334	AMPS

NOTES ( )
1. REFER TO FAULT CURRENT STATEMENT ON RISER DIAGRAM.
2. COORDINATE BREAKER SIZE WITH EQUIPMENT NAME PLATE.

PANEL EM

SURFACE MOUNTED
120/208 VOLT 3 PHASE
4 WIRE WITH GROUND

LOCATED IN ELECTRICAL ROOM

150A MLO
NEMA 1
(1) AIC

WIRE SIZE	COND. SIZE	LOAD TYPE	CKT. NO.	DESCRIPTION	BREAKER TRIP	POLE	VOLT	A	B	C	BREAKER VOLT	POLE	TRIP	DESCRIPTION	CKT. NO.	LOAD TYPE	COND. SIZE	WIRE SIZE
12	3/4	L	1	APPARATUS BAY EM LTS (2)	20	1	120	1200	550		120	1	20	COVERED PATIO LIGHT (2)	2	L	3/4	12
12	3/4	L	3	APPARATUS BAY EM LTS (2)	20	1	120		1200	900	120	1	20	EXT. BUILDING/EM(2)	4	L	3/4	12
12	3/4	L	5	ACTIVITY RM/KITCHEN EM LTS (2)	20	1	120			840 1000	120	1	20	911 EMER. LIGHT (3)	6	L	3/4	12
12	3/4	L	7	EL/OFFICES/RES RS EM LTS (2)	20	1	120	910	1000		120	1	20	911 EMER. LIGHT (3)	8	L	3/4	12
12	3/4	L	9	SLEEPING CORR. EM LTS (2)	20	1	120		420	1000	120	1	20	911 EMER. LIGHT (3)	10	L	3/4	12
12	3/4	L	11	MECH/REST./REST RM EM LTS (2)	20	1	120			790 250	120	1	15	MASTER LCP (2)	12	M	3/4	12
12	3/4	M	13	INTERCOM	20	1	120	1200	1000		120	1	20	FIRE ALARM CONTROL PANEL (2)	14	M	3/4	12
12	3/4	L	15	MECH/REST RM EM LTS (2)	20	1	120			400 540	120	1	20	TRAINING ROOM LIGHT (2)	16	L	3/4	12
			17	SPARE	50	3	208			905	120	1	20	SPARE	18			
			19								120	1	20	SPARE	20			
			21	SITE LIGHTING	20	2	208				1			SPACE	22			
8	1	L	23								1			SPACE	24			
		L	25					724			1			SPACE	26			
8	1	L	27	SITE LIGHTING	20	2	208			550 3000	208	2	100	GENERATOR PREWIRED PSL 'G' (2)	28	M		REFER TO GEN. DWGS.
		L	29							550 3000						M		
				CONNECTED VA				6584	8010	7335								
				SYSTEM VOLTS				120/208V, 3 PHASE										
				PHASE AMPS				55	67	61								

LOAD TYPE		CONNECTED	NEC DEMAND	DEMAND LOAD	
L	LIGHTING	12574	1.25	15718	VA
R	RECEPTACLES	0	1	0	VA
AC	AIR CONDITIONING	0	0	0	VA
H	HEATING	0	0	0	VA
M	MISC. NON-CONTINUOUS	8450	1	8450	VA
C	CONTINUOUS	0	1.25	0	VA
K	KITCHEN	0	0.65	0	VA
			TOTAL	24168	VA
		120/208V, 3 PHASE		67	AMPS

NOTES ( )
1. REFER TO FAULT CURRENT STATEMENT ON RISER DIAGRAM.
2. PROVIDE BREAKER WITH LOCK ON DEVICE.
3. 911 LIGHT SYSTEM IS PROVIDED BY OTHERS.

PANEL SB

SURFACE MOUNTED
120/208 VOLT 3 PHASE
4 WIRE WITH GROUND

LOCATED IN ELECTRICAL ROOM

100A MLO
NEMA 1
(1) AIC

WIRE SIZE	COND. SIZE	LOAD TYPE	CKT. NO.	DESCRIPTION	BREAKER TRIP	POLE	VOLT	A	B	C	BREAKER VOLT	POLE	TRIP	DESCRIPTION	CKT. NO.	LOAD TYPE	COND. SIZE	WIRE SIZE
10	3/4	R	1	RECEPTACLE APPARATUS BAY-1 (3)	20	1	120	500			120	1	20	SPARE	2			
10	3/4	R	3	RECEPTACLE APPARATUS BAY-2 (3)	20	1	120		500	1000	120	1	20	ICE MACHINE	4	M	3/4	10
10	3/4	R	5	RECEPTACLE APPARATUS BAY-3 (3)	20	1	120			500 1500		1		TRAFIC SIGNAL (4)	6	M	2	
10	3/4	R	7	RECEPTACLE APPARATUS BAY-4 (3)	20	1	120	500	1500			1		TRAFIC SIGNAL (4)	8	M	2	
10	3/4	R	9	RECEPTACLE APPARATUS BAY-9	20	1	120		360	900	120	1	20	RESTROOM RECEPTACLES-BUNKER	10	R	3/4	12
10	3/4	R	11	RECEPTACLE APPARATUS BAY-10	20	1	120			360	120	1	20	SPARE	12			
10	3/4	R	13	RECEPTACLE APPARATUS BAY-11	20	1	120	360			120	1	20	SPARE	14			
12	3/4	R	15	RECEPTACLE APPARATUS BAY-12	20	1	120		720	360	120	1	20	BATH RECEPTACLES-1	16	R	3/4	10
12	3/4	R	17	RECEPTACLE APPARATUS BAY	20	1	120			1080 360	120	1	20	BATH RECEPTACLES-2	18	R	3/4	10
10	3/4	R	19	RECEPTACLE APPARATUS BAY-5 (3)	20	1	120	500	720		120	1	20	CORRIDOR RECEPTACLES	20	R	3/4	10
10	3/4	R	21	RECEPTACLE APPARATUS BAY-6 (3)	20	1	120		500	700	120	1	20	CEILING FANS	22	M	3/4	12
10	3/4	R	23	RECEPTACLE APPARATUS BAY-7 (3)	20	1	120			500	120	1	20	SPARE	24			
10	3/4	R	25	RECEPTACLE APPARATUS BAY-8 (3)	20	1	120	500			120	1	20	SPARE	26			
			27	SPARE	20	1	120				120	1	20	SPARE	28			
			29	SPARE	20	1	120				120	1	20	SPARE	30			
			31	SPARE	20	1	120				120	1	20	SPARE	32			
			33	SPARE	20	1	120				120	1	20	SPARE	34			
10	3/4	L	35	FLAG POLE LIGHTS	20	1	120			510	120	1	20	SPARE	36			
			37	SPACE	1						1			SPACE	38			
			39	SPACE	1						1			SPACE	40			
			41	SPACE	1						1			SPACE	42			
				CONNECTED VA				4580	5040	4810								
				SYSTEM VOLTS				120/208V, 3 PHASE										
				PHASE AMPS				38	42	40								

LOAD TYPE		CONNECTED	NEC DEMAND	DEMAND LOAD	
L	LIGHTING	510	1.25	637.5	VA
R	RECEPTACLES	9220	1	9220	VA
AC	AIR CONDITIONING	0	0	0	VA
H	HEATING	0	0	0	VA
M	MISC. NON-CONTINUOUS	4700	1	4700	VA
C	CONTINUOUS	0	1.25	0	VA
K	KITCHEN	0	0.65	0	VA
			TOTAL	14558	VA
		120/208V, 3 PHASE		40	AMPS

NOTES ( )
1. REFER TO FAULT CURRENT STATEMENT ON RISER DIAGRAM.
2. PROVIDE BREAKER WITH LOCK OFF DEVICE.
3. PROVIDE WITH GFI BREAKER.
4. CONFIRM FINAL REQUIREMENTS FOR TRAFFIC SIGNAL WITH OWNER.

PANEL SA

SURFACE MOUNTED
120/208 VOLT 3 PHASE
4 WIRE WITH GROUND

LOCATED IN ELECTRICAL ROOM

200A MLO
NEMA 1
(1) AIC

SEC.2

WIRE SIZE	SIZE	LOAD TYPE	CKT. NO.	DESCRIPTION	BREAKER TRIP	POLE	VOLT	A	B	C	BREAKER VOLT	POLE	TRIP	DESCRIPTION	CKT. NO.	LOAD TYPE	SIZE	WIRE SIZE
12	3/4	L	1	APPATUS BAY LIGHTING-1	20	1	120	1050	900		120	1	20	OVERHEAD DOOR-1 (2)	2	L	3/4	12
12	3/4	L	3	APPATUS BAY LIGHTING-2	20	1	120		1050	900	120	1	20	OVERHEAD DOOR-2 (2)	4	M	3/4	12
12	3/4	L	5	SLEEPING DORM LIGHTING	20	1	120			720 900	120	1	20	OVERHEAD DOOR-3 (2)	6	M	3/4	12
12	3/4	L	7	EL/OFFICES/RESS EM LTS (4)	20	1	120	910	900		120	1	20	OVERHEAD DOOR-4 (2)	8	M	3/4	12
12	3/4	L	9	STORAGE ROOM LIGHT	20	1	120		120	900	120	1	20	OVERHEAD DOOR-5 (2)	10	M	3/4	12
12	3/4	L	11	MECH/REST RM EM LTS (2)	20	1	120			700 900	120	1	20	OVERHEAD DOOR-6 (2)	12	M	3/4	12
			13	SPARE	20	1	120	500			120	1	20	DROP RECEPTACLE-1 (5)	14	R	3/4	12
			15	SPARE	20	1	120		500		120	1	20	DROP RECEPTACLE-2 (5)	16	R	3/4	12
			17	SPARE	20	1	120			750	120	1	20	CO MONITORING	18	R	3/4	12
			19	SPARE	20	1	120	500			120	1	20	DROP RECEPTACLE-3 (5)	20	R	3/4	12
			21	SPARE	20	1	120		500		120	1	20	DROP RECEPTACLE-4 (5)	22	R	3/4	12
12	3/4	M	23	SLAVE LIGHTING CONTROL PANEL	15	1	120			300 600	120	1	20	STOVE (3)	24	M	3/4	12
12	3/4	M	25	FWC (5), (6)	20	1	120	750			120	1	20	SHUNT TRIP	26			
			27	SPARE	20	1	120		1000		120	1	20	ICE MAKER	28	M	3/4	12
12	3/4	R	29	OFFICE RECEPTACLE-1	20	1	120			540 1000	120	1	20	GARBAGE DISPOSAL	30	M	3/4	12
12	3/4	R	31	OFFICE &NITE ROOM RECEPTACLE	20	1	120	540			120	1	20	DISHWASHER (6)	32	M	3/4	12
12	3/4	R	33	OFFICE &NITE ROOM RECEPTACLE	20	1	120		540	1000	120	1	20	KITCHEN RECEPTACLE-1	34	R	3/4	12
10	3/4	M	35	DRYER	30	2	208			1250 180	120	1	20	KITCHEN RECEPTACLE-2	36	R	3/4	12
10	3/4	M	37					1250	800		120	1	20	REFRIGERATOR -1	38	M	3/4	12
12	3/4	M	39	WASHER	20	2	208		750	800	120	1	20	REFRIGERATOR -2	40	M	3/4	12
12	3/4	M	41							750 800	120	1	20	REFRIGERATOR -3	42	M	3/4	12
12	3/4	R	43	TELEPHONE RECEPTACLES-1	20	1	120	360	360		120	1	20	CHIEF QUARTER-1	44	R	3/4	12
12	3/4	R	45	TELEPHONE RECEPTACLES-2	20	1	120		360	540	120	1	20	CHIEF QUARTER-2	46	R	3/4	12
12	3/4	R	47	TELEPHONE RECEPTACLES-3	20	1	120			360 360	120	1	20	CAPTAIN QUARTERS-1	48	R	3/4	12
12	3/4	M	49	SECURITY S YSTEM	20	1	120	500	540		120	1	20	CAPTAIN QUARTERS-2	50	R	3/4	12
			51	SPARE	20	1	120			540	120	1	20	CREW QUARTERS-1,2,3	52	R	3/4	12
			53	SPARE	20	1	120			540	120	1	20	CREW QUARTERS-1,2,3	54	R	3/4	12
			55	SPARE	20	1	120	540			120	1	20	CREW QUARTERS-4,5,6	56	R	3/4	12
12	3/4	M	57	GWH (6)	20	1	120	500	540		120	1	20	CREW QUARTERS-4,5,6	58	R	3/4	12
12	3/4	M	59	GWH (6)	20	1	120			500 800	120	1	20	REFRIGERATOR-4	60	M	3/4	12
12	3/4	R	61	ACTIVITY ROOM RECEPTACLES	20	1	120	900	750		120	1	20	AHU-1 CONTROL (6)	62	M	3/4	12
12	3/4	R	63	ELECTRICAL ROOM RECEPTACLES	20	1	120		360	750	120	1	20	AHU-2 CONTROL (6)	64	M	3/4	12
12	3/4	R	65	EXTERIOR RECEPTACLES	20	1	120			540 250	120	1	15	EXHAUST FAN EF-5	66	M	3/4	12
			67	SPARE	20	1	120		360		120	1	20	CREW QUARTERS-7,8	68	R	3/4	12
			69	SPARE	20	1	120			360	120	1	20	CREW QUARTERS-7,8	70	R	3/4	12
			71	SPARE	20	1	120				120	1	20	SPARE	72			
			73	SPARE	20	1	120				120	1	20	SPARE	74			
			75	SPACE								1		SPACE	76			
12	3/4	M	77	HOOD FAN HEF-1 (2)	15	1	120			1200		1		SPACE	78			
12	3/4	M	79	HOOD LIGHTS & CONTROL	15	1	120	600				1		SPACE	80			
12	3/4	M	81	HOOD FAN HSF-1 (2), (3)	15	1	120		1200			1		SPACE	82			
12	3/4	M	83	(SHUNT TRIP)		1						1		SPACE	84			
				CONNECTED VA				13010	13210	13940								
				SYSTEM VOLTS				120/208V, 3 PHASE										
				PHASE AMPS				108	110	116								

LOAD TYPE		CONNECTED	NEC DEMAND	DEMAND LOAD	
L	LIGHTING	4550	1.25	5687.5	VA
R	RECEPTACLES	13110	1	11555	VA
AC	AIR CONDITIONING	0	0	0	VA
H	HEATING	0	0	0	VA
M	MISC. NON-CONTINUOUS	22500	1	22500	VA
C	CONTINUOUS	0	1.25	0	VA
K	KITCHEN	0	0.65	0	VA
			TOTAL	39743	VA
		120/208V, 3 PHASE		110	AMPS

NOTES ( )
1. REFER TO FAULT CURRENT STATEMENT ON RISER DIAGRAM.
2. COORDINATE BREAKER SIZE WITH DOOR INSTALLADER AND NAME PLATE.
3. PROVIDE WITH SHUNT TRIP MECHANISM. INTERLOCKED WITH KITCHEN HOOD AND FIRE ALARM SYSTEM.
4. PROVIDE BREAKER WITH LOCK ON DEVICE.
5. PROVIDE WITH GFI BREAKER.
6. PROVIDE BREAKER WITH LOCK-OFF DEVICE.

PANEL SC

SURFACE MOUNTED
120/208 VOLT 3 PHASE
4 WIRE WITH GROUND

60A MCB
NEMA 1
(1) AIC

WIRE SIZE	COND. SIZE	LOAD TYPE	CKT. NO.	DESCRIPTION	BREAKER TRIP	POLE	VOLT	A	B	C	BREAKER VOLT	POLE	TRIP	DESCRIPTION	CKT. NO.	LOAD TYPE	COND. SIZE	WIRE SIZE
12	3/4	R	1	TRAINING ROOM RECEPTACLE	20	1	120	720	360		120	1	20	TRAINING ROOM LIGHT	2	L	3/4	12
12	3/4	R	3	TRAINING ROOM RECEPTACLE	20	1	120		720	690					4	M		REFER TO EL.HVAC SCHEDULE
12	3/4	R	5	MECH &RES TROOM RECEPTACLE	20	1	120			720 690	208	3	20	AHU-3 (1.5HP)	6	M		
12	3/4	M	7	AHU-3 CONTROL (2)	20	1	120	750	690						8	M		
			9	SPARE	20	1	120		500		120	1	20	GWH (2)	10	M	3/4	12
			11	SPARE	20	1	120				120	1	20	SPARE	12			
			13								120	1	20	SPARE	14			
			15								120	1	20	SPARE	16			
			17								120	1	20	SPARE	18			
			19												20			
			21								208	3		SURGE PROTECTION	22			
			23												24			
			25												26			
			27												28			
			29												30			
			31												32			
			33												34			
			35												36			
			37												38			
			39												40			
			41												42			
				CONNECTED VA				2520	1910	1410								
				SYSTEM VOLTS				120/208V, 3 PHASE										
				PHASE AMPS				21	16	12								

LOAD TYPE		CONNECTED	NEC DEMAND	DEMAND LOAD	
L	LIGHTING	360	1.25	450	VA
R	RECEPTACLES	2160	1	2160	VA
AC	AIR CONDITIONING	0	0	0	VA
H	HEATING	0	0	0	VA
M	MISC. NON-CONTINUOUS	3320	1	3320	VA
C	CONTINUOUS	0	1.25	0	VA
K	KITCHEN	0	0.65	0	VA
			TOTAL	5930	VA
		120/208V, 3 PHASE		16	AMPS

NOTES ( )
1. REFER TO FAULT CURRENT STATEMENT ON RISER DIAGRAM.
2. PROVIDE BREAKER WITH LOCK OFF DEVICE

ELECTRICAL PANEL SCHEDULE

SCALE: N.T.S

GRINER ENGINEERING, INC.
1628 First Avenue North
St. Petersburg, Florida 33713
Phone: (727)-822-2335
Fax: (727)-821-3361
Certificate of Authorization #3173

Date	06-15-2017
Drawn	HH
Designed	HH
EOR	JAR
Job no.	17049

CITY OF TAMPA
CONTRACT ADMINISTRATION DEPARTMENT
PLANNING AND DESIGN DIVISION
306 E. JACKSON STREET 4 NORTH
TAMPA, FLORIDA 33602
p: 813. 274. 8456 – f: 813. 274. 8080
url: www.tampagov.net

James E. Jackson, Jr. AIA, NOMA
City Architect
Edward D. Rice, AIA
Project Architect
Kevin L. Henika, AIA
Project Architect
Thomas A. Hester, Sr., AIA, NOMA
Project Architect
David R. Pagitt
Supervisor, Architectural Drafting
Kinsey C. Tillman
Drafting Technician
Jerry P. Sanders
Drafting Technician
Byron K. Thomas, LEED AP
Drafting Technician

MEP CONSULTANT
GRINER ENGINEERING, INC.
1628 1st. AVENUE NORTH
ST. PETERSBURG, FL 33713

STRUCTURAL CONSULTANT
BILLER REINHART
STRUCTURAL GROUP, INC.
4014 GUNN HWY. SUITE 248
TAMPA, FL 33618

CIVIL CONSULTANT
B M CIVIL LLC
12315 WYCLIFF PLACE
TAMPA, FL 33626

LANDSCAPE CONSULTANT
DAVID CONNER & ASSOCIATES
1509 W. SWANN AVENUE,SUITE 255
TAMPA, FL 33606

FIRE STATION 23
20770 TROUT CREEK DR.
TAMPA, FL 33647

DPW FILE NUMBER

DPW NUMBER
17-c-00037

ISSUE DATE
07-28-2017

DRAWN BY

REVISIONS
1 SEWER LIFT ADD'N 1.14.14
2 02-21-2014

SEAL

Jose A Rosario, P.E. FL. 74457

SCALE: N.T.S.

ELECTRICAL PANEL SCHEDULES

SHEET NUMBER
E3.2
X OF X

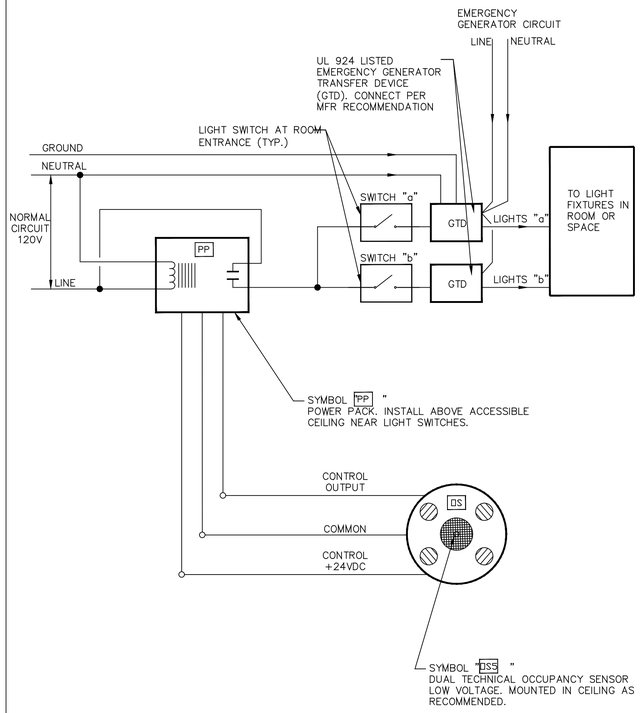

LIGHTING CONTROL DIAGRAM-CEILING MOUNTED SENSOR AND GENERATOR TRANSFER DEVICE (GTD)

NOT TO SCALE

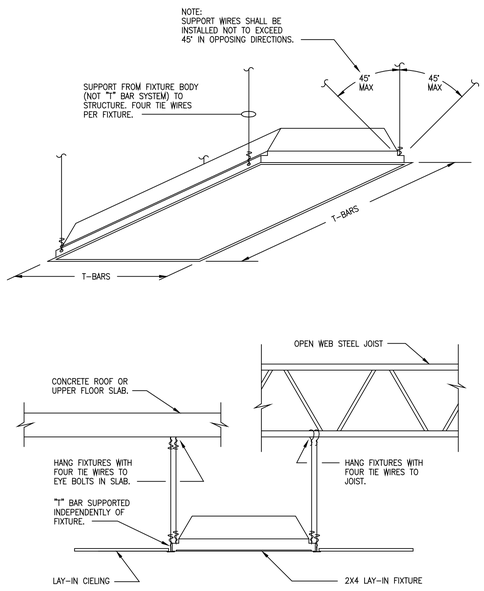

TYPICAL RECESSED LAY-IN LIGHT FIXTURE MOUNTING DETAIL

NOT TO SCALE

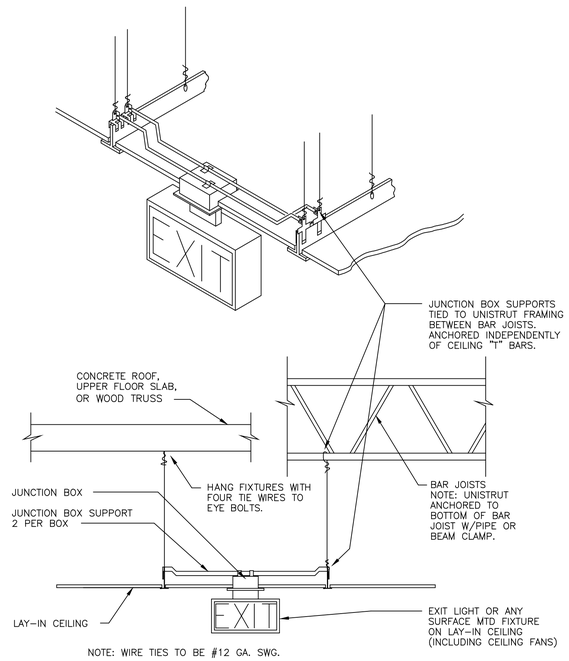

TYPICAL SURFACE OR LAY-IN CEILING MOUNTED EXIT SIGN

NOT TO SCALE

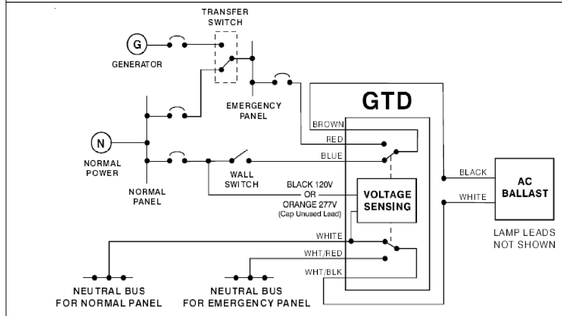

NORMAL OPERATION (SHOWN ABOVE)
AC LIGHTING BALLAST SUPPLIED BY NORMAL PANEL & CONTROLLED BY WALL SWITCH.

GENERATOR OPERATION
AC LIGHTING BALLAST SUPPLIED BY GENERATOR THROUGH EMERGENCY PANEL AND INDEPENDENT OF WALL SWITCH POSITION.

TYPICAL UL 924 LISTED GENERATOR TRANSFER DEVICE (GTD) BY BODINE WIRING DIAGRAM

NOT TO SCALE

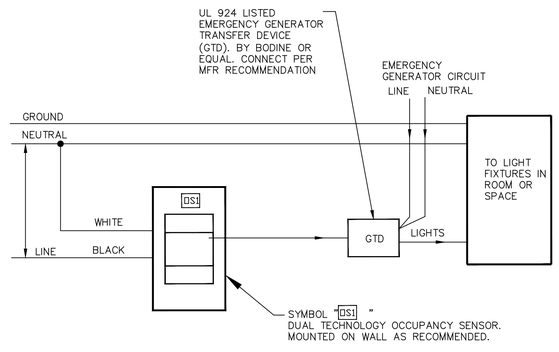

LIGHTING CONTROL DIAGRAM-LIGHTING SWITCH CONTROL AND GENERATOR TRANSFER DEVICE (GTD)

NOT TO SCALE

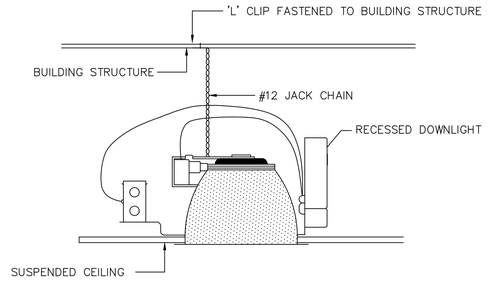

RECESSED MOUNTED DOWNLIGHT SUPPORT

NOT TO SCALE

ELECTRICAL DETAILS
SCALE: N.T.S.

CITY OF TAMPA
CONTRACT ADMINISTRATION
DEPARTMENT
PLANNING AND DESIGN DIVISION
306 E. JACKSON STREET 4 NORTH
TAMPA, FLORIDA 33602
p: 813. 274. 8456 - f: 813. 274. 8080
url: www.tampagov.net

James E. Jackson, Jr. AIA, NOMA
City Architect
Edward D. Rice, AIA
Project Architect
Kevin L. Henika, AIA
Project Architect
Thomas A. Hester, Sr., AIA, NOMA
Project Architect
David R. Pagitt
Supervisor, Architectural Drafting
Kinsey C. Tillman
Drafting Technician
Jerry P. Sanders
Drafting Technician
Byron K. Thomas, LEED AP
Drafting Technician

MEP CONSULTANT
GRINER ENGINEERING, INC.
1628 1st. AVENUE NORTH
ST. PETERSBURG, FL 33713

STRUCTURAL CONSULTANT
BILLER REINHART
STRUCTURAL GROUP, INC.
4014 GUNN HWY. SUITE 248
TAMPA, FL 33713

CIVIL CONSULTANT
B M CIVIL LLC
12315 WYCLIFF PLACE
TAMPA, FL 33626

LANDSCAPE CONSULTANT
DAVID CONNER & ASSOCIATES
1509 W. SWANN AVENUE,SUITE 255
TAMPA, FL 33606

FIRE STATION 23
20770 TROUT CREEK DR.
TAMPA, FL 33647

DPW FILE NUMBER

DPW NUMBER
17-C-00037

ISSUE DATE
07-28-2017

DRAWN BY

REVISIONS

SEAL

Jose A Rosario, P.E. FL. 74457

SCALE: N.T.S.

ELECTRICAL DETAILS 1/4

SHEET NUMBER
E4.1
X OF X

GRINER
GRINER ENGINEERING, INC.
1628 First Avenue North
St. Petersburg, Florida 33713
Phone: (727)-822-2335
Fax: (727)-821-3361
Certificate of Authorization #3173

Date	06-15-2017
Drawn	HH
Designed	HH
EOR	JAR
Job no.	17049

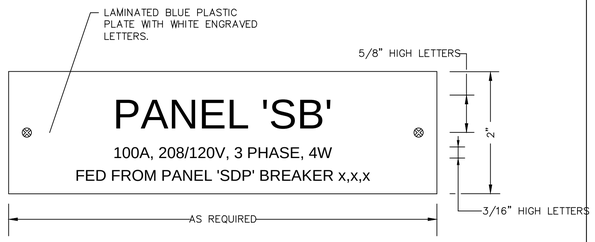

NOTES:

1. NEW NAMEPLATES MUST BE INSTALLED ON ALL ELECTRICAL PANELS TEMPORARY NAMEPLATES ARE NOT ACCEPTABLE.
2. THE AMPERAGE RATING ENGRAVED ON THE NAMEPLATE SHALL BE THE RATING OF THE MAIN OVER-CURRENT PROTECTION DEVICE, ITS TRIP DEVICE SETTING, OR DESIGN BUS CAPACITY IN THE ABSENCE OF A MAIN OVER CURRENT DEVICE, NOT THE SWITCHBOARD OR PANELBOARD BUS RATING.

TYPICAL PANELBOARD NAMEPLATE DETAIL
NOT TO SCALE

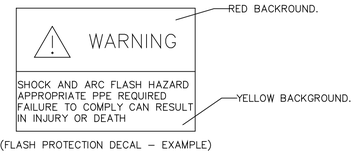

(FLASH PROTECTION DECAL – EXAMPLE)

CONTRACTOR SHALL PROVIDE DECAL 1-1/2" x 2-1/2" WITH 3/16" LETTERING STATING THE ABOVE. DECAL SHALL BE LOCATED ON THE OUTSIDE OF ALL SWITCHBOARDS, PANEL BOARDS AND DISCONNECT SWITCHES. DECAL SHALL BE RED AND YELLOW BACKGROUND WITH BLACK LETTERING WITH A CLEAR PLASTIC LAMINATE TOP COVER OVER DECAL.

FLASH PROTECTION DECAL
NOT TO SCALE

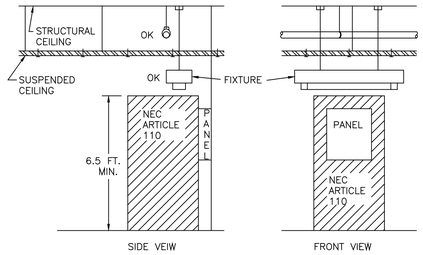

PANEL AND SWITCHBOARD CLEARANCE
NOT TO SCALE

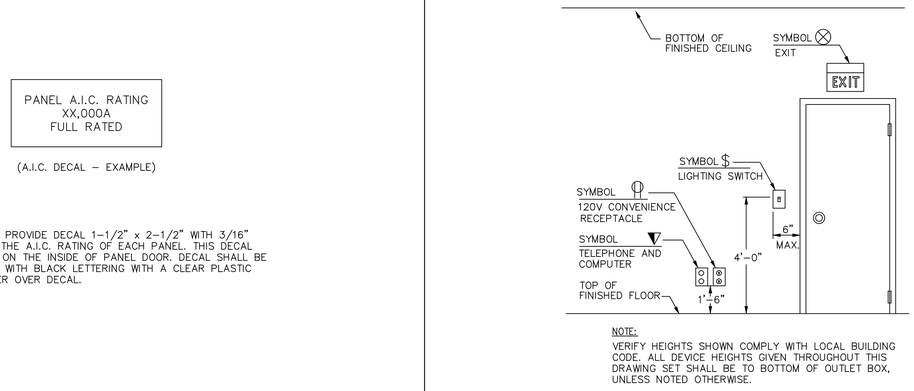

NOTE:
VERIFY HEIGHTS SHOWN COMPLY WITH LOCAL BUILDING CODE. ALL DEVICE HEIGHTS GIVEN THROUGHOUT THIS DRAWING SET SHALL BE TO BOTTOM OF OUTLET BOX, UNLESS NOTED OTHERWISE.

TYPICAL DEVICE MOUNTING HEIGHT
NOT TO SCALE

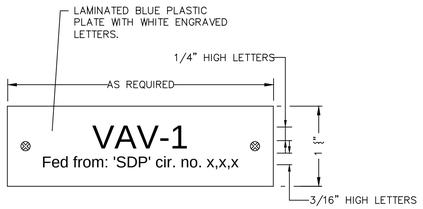

TYPICAL HVAC CHILLER UNIT NAMEPLATE DETAIL
NOT TO SCALE

PANEL A.I.C. RATING
XX,000A
FULL RATED

(A.I.C. DECAL – EXAMPLE)

NOTE:

1. CONTRACTOR SHALL PROVIDE DECAL 1-1/2" x 2-1/2" WITH 3/16" LETTERING STATING THE A.I.C. RATING OF EACH PANEL. THIS DECAL SHALL BE LOCATED ON THE INSIDE OF PANEL DOOR. DECAL SHALL BE WHITE BACKGROUND WITH BLACK LETTERING WITH A CLEAR PLASTIC LAMINATE TOP COVER OVER DECAL.

A.I.C. IDENTIFICATION DECAL
NOT TO SCALE

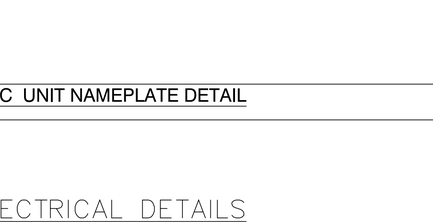

TYPICAL HVAC UNIT NAMEPLATE DETAIL
NOT TO SCALE

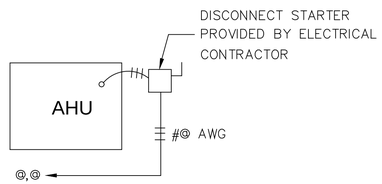

GENERAL NOTES

1. VERIFY NAMEPLATE RATINGS, LOCATIONS AND POINT OF POWER CONNECTIONS PRIOR TO ROUGH-IN.
2. DO NOT LOCATE DISCONNECT SWITCHES ON EQUIPMENT HOUSING. WALL OR TRUSS MOUNT OR USE STRUT.
3. EQUIPMENT REQUIREMENTS ARE FOR MANUFACTURER AND MODEL NUMBER LISTED ON MECHANICAL PLANS. THE MECHANICAL CONTRACTOR SHALL BEAR ANY ADDITIONAL COSTS INCURRED IF ALTERNATE EQUIPMENT IS USED.
4. CONTRACTOR TO CONNECT TO EQUIPMENT VIA FLEX CONDUIT FOR INDOOR LOCATIONS; SEAL-TITE FLEX CONDUIT FOR OUTDOOR LOCATIONS.

TYPICAL HVAC AIR HANDLING UNIT CONNECTION DETAIL
NOT TO SCALE

ELECTRICAL DETAILS
SCALE: N.T.S.

GRINER ENGINEERING, INC.
1628 First Avenue North
St. Petersburg, Florida 33713
Phone: (727)-822-2335
Fax: (727)-821-3361
Certificate of Authorization #3173

Date	06-15-2017
Drawn	HH
Designed	HH
EOR	JAR
Job no.	17049

CITY OF TAMPA
CONTRACT ADMINISTRATION DEPARTMENT
PLANNING AND DESIGN DIVISION
306 E. JACKSON STREET 4 NORTH
TAMPA, FLORIDA 33602
p: 813. 274. 8456 – f: 813. 274. 8080
url: www.tampagov.net

James E. Jackson, Jr. AIA, NOMA
City Architect
Edward D. Rice, AIA
Project Architect
Kevin L. Henika, AIA
Project Architect
Thomas A. Hester, Sr., AIA, NOMA
Project Architect
David R. Pagitt
Supervisor, Architectural Drafting
Kinsey C. Tillman
Drafting Technician
Jerry P. Sanders
Drafting Technician
Byron K. Thomas, LEED AP
Drafting Technician

MEP CONSULTANT
GRINER ENGINEERING, INC.
1628 1st. AVENUE NORTH
ST. PETERSBURG, FL 33713

STRUCTURAL CONSULTANT
BILLER REINHART
STRUCTURAL GROUP, INC.
4014 GUNN HWY. SUITE 248
TAMPA, FL 33713

CIVIL CONSULTANT
B M CIVIL LLC
12315 WYCLIFF PLACE
TAMPA, FL 33626

LANDSCAPE CONSULTANT
DAVID CONNER & ASSOCIATES
1509 W. SWANN AVENUE,SUITE 255
TAMPA, FL 33606

FIRE STATION 23
20770 TROUT CREEK DR.
TAMPA, FL 33647

DPW FILE NUMBER

DPW NUMBER
17-C-00037

ISSUE DATE
07-28-2017

DRAWN BY

REVISIONS

SEAL

Jose A Rosario, P.E. FL. 74457

SCALE: N.T.S.

ELECTRICAL DETAILS 2/4

SHEET NUMBER
E4.2
X OF X

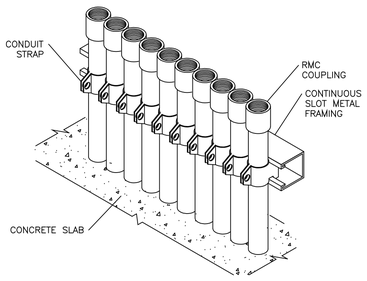

NOTE:
TYPICAL CONDUITS SHOWN. SEE PLAN FOR CONDUIT SIZE AND ACTUAL NUMBER.

SUPPORT FOR MULTIPLE CONDUIT STUB-UPS
NOT TO SCALE

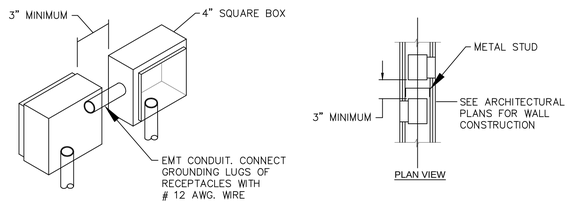

BACK TO BACK ELECTRICAL OUTLETS DETAIL
NOT TO SCALE

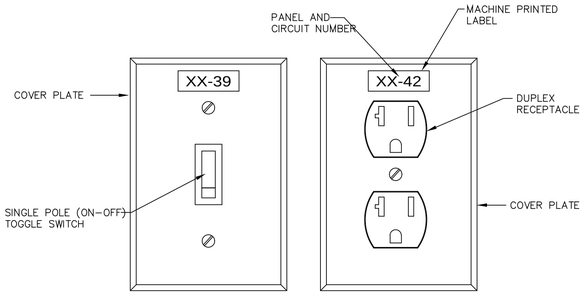

RECEPTACLE AND LIGHT SWITCH ID PLATE DETAIL
NOT TO SCALE

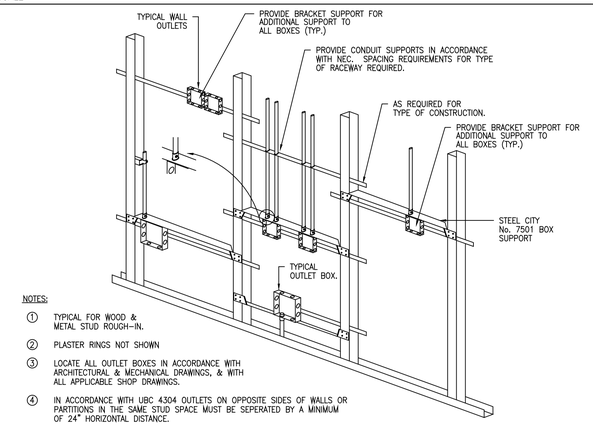

NOTES:
1. TYPICAL FOR WOOD & METAL STUD ROUGH-IN.
2. PLASTER RINGS NOT SHOWN
3. LOCATE ALL OUTLET BOXES IN ACCORDANCE WITH ARCHITECTURAL & MECHANICAL DRAWINGS, & WITH ALL APPLICABLE SHOP DRAWINGS.
4. IN ACCORDANCE WITH UBC 4304 OUTLETS ON OPPOSITE SIDES OF WALLS OR PARTITIONS IN THE SAME STUD SPACE MUST BE SEPERATED BY A MINIMUM OF 24" HORIZONTAL DISTANCE.

TYPICAL ROUGH-IN REQUIREMENTS
NOT TO SCALE

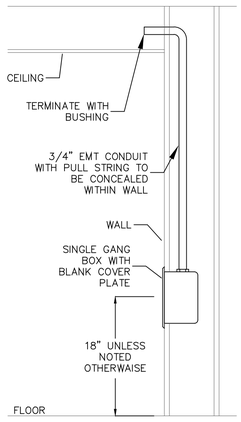

VOICE/DATA DROP DETAIL
NOT TO SCALE

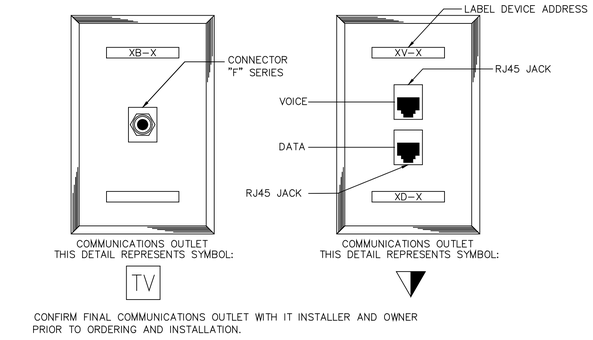

CONFIRM FINAL COMMUNICATIONS OUTLET WITH IT INSTALLER AND OWNER PRIOR TO ORDERING AND INSTALLATION.

COMMUNICATION OUTLET DETAILS
NOT TO SCALE

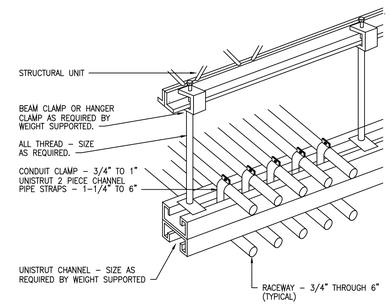

TYPICAL CONDUIT RACK DETAIL
NOT TO SCALE

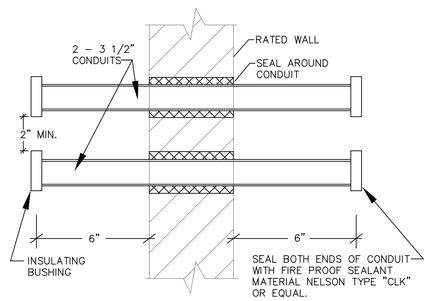

DETAIL FOR CABLE BUNDLE CONDUIT PENETRATION OF RATED WALL
NOT TO SCALE

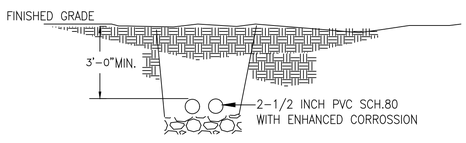

NOTE:
1. CONTRACTOR SHALL TRENCH AND INSTALL UNDERGROUND SERVICE AS SHOWN.
2. COMPLY WITH ALL APPLICABLE CODES AND SPC STANDARDS.

TRENCHING DETAIL
NOT TO SCALE

ELECTRICAL DETAILS
SCALE: N.T.S.

CITY OF TAMPA
CONTRACT ADMINISTRATION DEPARTMENT
PLANNING AND DESIGN DIVISION
306 E. JACKSON STREET 4 NORTH
TAMPA, FLORIDA 33602
p: 813. 274. 8456 - f: 813. 274. 8080
url: www.tampagov.net

James E. Jackson, Jr. AIA, NOMA
City Architect
Edward D. Rice, AIA
Project Architect
Kevin L. Henika, AIA
Project Architect
Thomas A. Hester, Sr., AIA, NOMA
Project Architect
David R. Pagitt
Supervisor, Architectural Drafting
Kinsey C. Tillman
Drafting Technician
Jerry P. Sanders
Drafting Technician
Byron K. Thomas, LEED AP
Drafting Technician

MEP CONSULTANT
GRINER ENGINEERING, INC.
1628 1st. AVENUE NORTH
ST. PETERSBURG, FL 33713

STRUCTURAL CONSULTANT
BILLER REINHART STRUCTURAL GROUP, INC.
4014 GUNN HWY. SUITE 248
TAMPA, FL 33713

CIVIL CONSULTANT
B M CIVIL LLC
12315 WYCLIFF PLACE
TAMPA, FL 33626

LANDSCAPE CONSULTANT
DAVID CONNER & ASSOCIATES
1509 W. SWANN AVENUE,SUITE 255
TAMPA, FL 33606

FIRE STATION 23
20770 TROUT CREEK DR.
TAMPA, FL 33647

DPW FILE NUMBER

DPW NUMBER
17-C-00037

ISSUE DATE
07-28-2017

DRAWN BY

REVISIONS

SEAL

Jose A Rosario, P.E. FL. 74457

SCALE: N.T.S.

ELECTRICAL DETAILS 3/4

SHEET NUMBER
E4.3
X OF X

GRINER
GRINER ENGINEERING, INC.
1628 First Avenue North
St. Petersburg, Florida 33713
Phone: (727)-822-2335
Fax: (727)-821-3361
Certificate of Authorization #3173

Date	06-15-2017
Drawn	HH
Designed	HH
EOR	JAR
Job no.	17049

SYSTEM NO. W-L-1001

F Ratings - 1, 2, 3 and 4 Hr (See Items 2 and 3)
T Ratings - 0, 1, 2, 3, and 4 Hr (See Item 3)
L Rating @ Ambient - less than 1 CFM/sq ft
L Rating @ 400° F - less than 1 CFM/sq ft

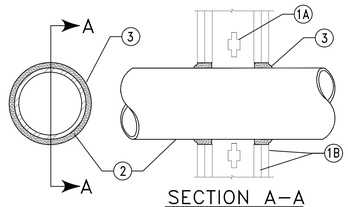

SECTION A-A

1. Wall Assembly - The 1, 2, 3 or 4 hr fire-rated gypsum wallboard/stud wall assembly shall be constructed of the materials and in the manner described in the individual U300 or U400 Series Wall or Partition Designs in the UL Fire Resistance Directory and shall include the following construction features:

   A. Studs - Wall framing may consist of either wood studs (max 2 hr fire rated assemblies) or steel channel studs. Wood studs to consist of nom 2 by 4 in. (51 by 102 mm) lumber spaced 16 in. (406 mm) OC with nom 2 by 4 in. (51 by 102 mm) lumber end plates and cross braces. Steel studs to be min 3-5/8 in. (92 mm) wide by 1-3/8 in. (35 mm) deep channels spaced max 24 in. (610 mm) OC.

   B. Gypsum Board* - Nom 1/2 or 5/8 in. (13 or 16 mm) thick, 4 ft. (122 cm) wide with square or tapered edges. The gypsum wallboard type, thickness, number of layers, fastener type and sheet orientation shall be as specified in the individual U300 or U400 Series Design in the UL Fire Resistance Directory. Max diam of opening is 26 in. (660 mm).

2. Through Penetrant - One metallic pipe, conduit or tubing installed either concentrically or eccentrically within the firestop system. The annular space between pipe, conduit or tubing and periphery of opening shall be min of 0 in. (0 mm) (point contact) to max 2 in. (51 mm). Pipe, conduit or tubing to be rigidly supported on both sides of wall assembly. The following types and sizes of conduits may be used:

   A. Conduit - Nom 6 in. (152 mm) diam (or smaller) steel conduit or nom 4 in. (102 mm) diam (or smaller) steel electrical metallic tubing

3. Fill,Void or Cavity Material* - Caulk or Sealant - Min 5/8. 1-1/4,1-7/8 and 2-1/2 in. (16, 32, 48 and 64 mm) thickness of caulk for 1, 2, 3 and 4 hr rated assemblies, respectively, applied within annulus, flush with both surfaces of wall. Min 1/4 in. (6 mm) diam bead of caulk applied to gypsum board/penetrant interface at point contact location on both sides of wall.
   The hourly F Rating of the firestop system is dependent upon the hourly fire rating of the wall assembly in which it is installed, as shown in the following table.
   The hourly T Rating of the firestop system is dependent upon the type or size of the pipe or conduit and the hourly fire rating of the wall assembly in which it is installed, as tabulated below:

Max Pipe or Conduit Diam In	F Rating Hr	T Rating Hr
1 (25)	1 or 2	0+, 1 or 2
1 (25)	3 or 4	3 or 4
4 (102)	1 or 2	0
6 (152)	3 or 4	0
12 (305)	1 or 2	0

+When copper pipe is used, T Rating is 0 hr.

3M COMPANY - CP 25WB + or FB-3000 WT ,

*Bearing the UL Classification Marking

CONDUIT PENETRATION OF FIRE WALL (UL SYSTEM No W-L-1001)
NOT TO SCALE

SYSTEM NO. C-AJ-1044

F Ratings - 2, 3, and 4 Hr (See item 2A and 4)
T Rating - 0 Hr
L Rating @ Ambient - 2 CFM/sq ft
L Rating @ 400 F - less than 1 CFM/sq ft
W Rating - Class I (See Item 4)

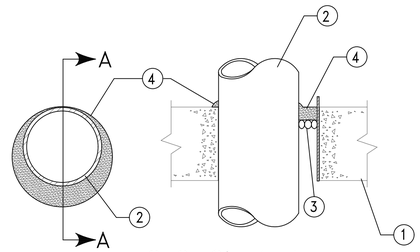

SECTION A-A

1. Floor or Wall Assembly - Lightweight or normal weight (100-150 pcf or 1600-2400 kg/m3) concrete. Except as noted in table under Item 4, min thickness of solid concrete floor or wall assembly is 4-1/2 in. (114 mm). Floor may also be constructed of any min 6 in. (152 mm) thick UL Classified hollow core Precast Concrete Units*. When floor is constructed of hollow core precast concrete units, packing material (Item 3) and caulk fill material (Item 4) to be installed symmetrically on both sides of floor, flush with floor surface. Wall assembly may also be constructed of any UL Classified Concrete Blocks*. Max diam of opening is in solid lightweight or normal weight concrete. Floor is 32 in. (813 mm). Max diam of opening in floor constructed of hollow-core precast concrete units is 7 in. (178 mm).

   See Concrete Blocks (CAZT) and Precast Concrete Units (CFTV) categories in the Fire Resistance Directory for names of manufacturers.

   1A. Steel Sleeve (Optional, not shown) - Nom. 16 in. (406 mm) diam. (or smaller) Schedule 10 (or heavier) steel sleeve cast or grouted into floor or wall assembly. Sleeve may extend a max of 2 in. (51 mm) above top of floor or beyond either surface of wall. As an alternate, nom. 16 in. (406 mm) diam. (or smaller) min 0.028 (0.71 mm) thick galvanized sheet steel sleeve cast or grouted into floor or wall assembly flush with floor or wall surfaces.

2. Through Penetrants - One metallic pipe, conduit or tubing to be installed either concentrically or eccentrically within the firestop system. Max annular space between pipe, conduit or tubing and edge of through opening or sleeve is dependent on the parameters shown in Item 4. Min annular space between pipe or conduit and edge of through opening is 0 in. (point contact). Max. annular space to be as shown in the table in Item 4. Pipe, conduit or tubing to be rigidly supported on both sides of floor or wall assembly. The following types and sizes of metallic pipes, conduits or tubing may be used.

   A. Conduit - Nom 6 in. (152 mm) diam (or smaller) rigid steel conduit.
   B. Conduit - Nom 4 in. (102 mm) diam (or smaller) steel electrical metallic tubing.

3. Packing Material - Polyethylene backer rod or nom 1 in. (25 mm) thickness of tightly-packed mineral wool batt or glass fiber insulation firmly packed into opening as a permanent form. Packing material to be recessed from top surface of floor or from both surfaces of wall as required to accommodate the required thickness of caulk fill material (Item 4).

   3A. Forming Material - As an alternate to the packing material in Item. 3, nom. 4 in. (102 mm) wide strips of min. 1/2 in (13 mm) thick compressible mat to be stacked to a thickness greater than the width of the annular space and compression-fitted, edge-first, to fill the annular space to a min. 4 in. (102 mm) depth. As an option, the strips of min. 1/2 in. (13 mm) thick compressible mat may be folded in half, lengthwise, and stacked to a thickness greater than the width of the annular space and compression-fitted, edge-first, to fill the annular space to a min. 2 in. (51 mm) depth. Top of forming material to be recessed from top furface of floor or from both surfaces of wall as necessary to accommodate the rquired thickness of caulk fill material.

   3M COMPANY - Fire Barrier Packing Material.

4. Fill,Void or Cavity Material* - Caulk, Sealant - Applied to fill the annular space flush with top surface of floor. In wall assemblies, required caulk thickness to be installed symmetrically on both sides of wall, flush with wall surface. At point contact location between penetrant and sleeve or between penetrant and concrete, a min 1/4 in. (6 mm) diam bead of caulk shall be applied at top surface of floor and at both surfaces of wall. The hourly F Ratings and the min required caulk thicknesses are dependent upon a number of parameters, as shown in the following table:

Min Floor or Wall Thkns In. (mm)	Nom Pipe Tube or Conduit Diam in. (mm)	Max Annular Space in. (mm)	Min Caulk Thkns in. (mm)	F Rating Hr
2-1/2 (64)	1/2-12 (13-305)	1-3/8 (35)	1/2 (13)	2
2-1/2 (64)	1/2-12 (13-305)	3-1/4 (83)	1 (25)	2
4-1/2 (114)	1/2-6 (13-152)	1-3/8 (35)	1/4 (6) (a)	2
4-1/2 (114)	1/2-12 (13-305)	1-1/4 (32)	1/2 (13)	3
4-1/2 (114)	1/2-20 (13-508)	2 (51)	1 (25)	3
4-1/2 (114)	1/2-20 (13-508)	2 (51)	1 (25)	3
4-1/2 (114)	1/2-12 (13-305)	3-1/4 (83)	1 (25)	3
4-1/2 (114)	22-30 (558-762)	2 (51)	2 (51)	3
5-1/2 (140)	1/2-6 (13-152)	1-3/8 (35)	1 (25) (b)	4

a. Min 2 in. (51 mm) thickness of mineral wool batt insulation or forming material (Item 3A) required in annular space.
b. Min 1 in. (25 mm) thickness of mineral wool batt insulation required in annular space on both sides of floor or wall assembly. Min 1 in. (25 mm) thickness of caulk to be installed flush with each surface of floor or wall assembly.

3M COMPANY - CP 25WB + or FB-3000 WT. (Note: W Rating applies only when FB-3000 WT sealant is used.)

*Bearing the UL Classification Marking

CONDUIT PENETRATION OF FIRE RATED FLOOR/WALL (UL SYSTEM No C-AJ-1044)
NOT TO SCALE

ELECTRICAL DETAILS
SCALE: N.T.S.

CITY OF TAMPA
CONTRACT ADMINISTRATION DEPARTMENT
PLANNING AND DESIGN DIVISION
306 E. JACKSON STREET 4 NORTH
TAMPA, FLORIDA 33602
p: 813. 274. 8456 – f: 813. 274. 8080
url: www.tampagov.net

James E. Jackson, Jr. AIA, NOMA
City Architect
Edward D. Rice, AIA
Project Architect
Kevin L. Henika, AIA
Project Architect
Thomas A. Hester, Sr., AIA, NOMA
Project Architect
David R. Pagitt
Supervisor, Architectural Drafting
Kinsey C. Tillman
Drafting Technician
Jerry P. Sanders
Drafting Technician
Byron K. Thomas, LEED AP
Drafting Technician

MEP CONSULTANT
GRINER ENGINEERING, INC.
1628 1st. AVENUE NORTH
ST. PETERSBURG, FL 33713

STRUCTURAL CONSULTANT
BILLER REINHART
STRUCTURAL GROUP, INC.
4014 GUNN HWY. SUITE 248
TAMPA, FL 33713

CIVIL CONSULTANT
B M CIVIL LLC
12315 WYCLIFF PLACE
TAMPA, FL 33626

LANDSCAPE CONSULTANT
DAVID CONNER & ASSOCIATES
1509 W. SWANN AVENUE,SUITE 255
TAMPA, FL 33606

FIRE STATION 23
20770 TROUT CREEK DR.
TAMPA, FL 33647

DPW FILE NUMBER

DPW NUMBER
17-C-00037

ISSUE DATE
07-28-2017

DRAWN BY

REVISIONS

SEAL

Jose A Rosario, P.E. FL. 74457

SCALE: N.T.S.

ELECTRICAL DETAILS 4/4

GRINER
GRINER ENGINEERING, INC.
1628 First Avenue North
St. Petersburg, Florida 33713
Phone: (727)-822-2335
Fax: (727)-821-3361
Certificate of Authorization #3173

Date	06-15-2017
Drawn	HH
Designed	HH
EOR	JAR
Job no.	17049

SHEET NUMBER
E4.4
X OF X

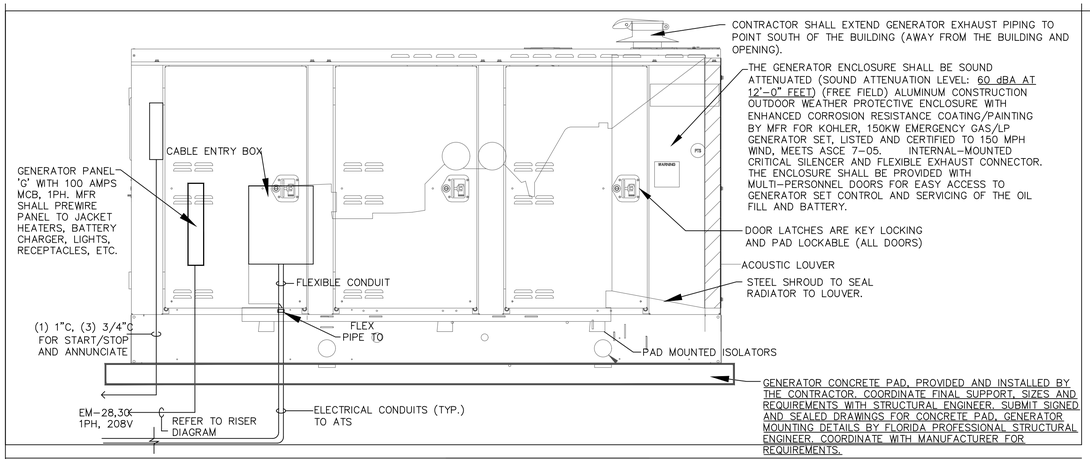

TYPICAL GENERATOR CABLE ENTRY BOX AND ENCLOSURE

NOT TO SCALE

GENERATOR SCHEDULE

MARK	G
SERVICE	EMERGENCY, LEVEL 1
MANUFACTURER	KOHLER
MODEL	180REZBX
ELECTRICAL	120/208V AC
PHASES	3PH, 4W
FREQUENCY	60Hz
CAPACITY - KW	180KW
CAPACITY - KVA	225 KVA AT NATURAL GAS
ALTERNATOR	4S13X OVERSIZED
POWER FACTOR	0.8
FUEL	NATURAL GAS/LP
MAIN BREAKER #1	500 AMPS, LSI
MAIN BREAKER #2	150 AMPS, LSI
GENERATOR ENCLOSURE	ALUMINUM
ENCLOSURE LIGHTS AND RECEPTACLES	YES (NORMAL AND EMERGENCY LIGHTING)
CRITICAL EXHAUST SILENCER	60dBA AT 12'-0"
COOLANT HEATER	120V, 1800W
BATTERY HEATER	120V
ANTI-CONDENSATION HEATER	120V
ALTERNATOR TROPICAL COATING	YES
RODENT GUARD	YES
SKID END CAPS	YES
REMOTE ANNUNCIATOR	NFPA 110 LEVEL REMOTE
REMOTE E-STOP	BREAK GLASS-TYPE
EPA CERTIFICATION	EPA-CERTIFIED (CURRENT TIER RATING)
WARRANTY	2 YEARS EXTENDED COMPREHENSIVE
COMMUNICATION	RS-232, RS-485
STANDARDS/CODE	UL2200, NFPA110 LEVEL 1, NFPA 70, FBC
NOTES:	1-3

1. PROVIDE GENERATOR WITH SOUND ENCLOSURE AND CRITICAL SILENCER RATED AT 150MPH.
2. REFER TO GENERATOR SPECIFICATION FOR ADDITIONAL REQUIREMENTS
3. THE GENERATOR AND AUTOMATIC TRANSFER SWITCHES SHALL BE PRODUCTS OF THE SAME MANUFACTURER.

AUTOMATIC TRANSFER SWITCH SCHEDULE

MARK	ATS-EM	ATS-S
MANUFACTURER	KOHLER	EATON
MODEL	KBP-C-V-0150	KBP-C-V-0500
ELECTRICAL	120/208V AC	120/208V AC
PHASES	3PH, 4W	3PH, 4W
FREQUENCY	60Hz	60Hz
WITHSTAND RATING, 3 CYCLE	50KA MIN	50KA MIN
POLES	4 POLES	4 POLES
NEUTRAL	SWITCHED	SWITCHED
AMPERAGE RATING	150 AMPS	500 AMPS
TRANSITION TYPE	STANDARD	STANDARD
BYPASS ISOLATION	YES	YES
ENCLOSURE TYPE	NEMA 1	NEMA 1
TVSS	INTEGRAL	INTEGRAL
WARRANTY	2 YEARS EXTENDED COMPREHENSIVE	
COMMUNICATION	RS-232, RS-485	
STANDARDS/CODE	UL1008, NFPA110 LEVEL 1, NFPA 70, FBC	
NOTES:	1-2	1-2

1. THE AUTOMATIC TRANSFER SWITCH AND THE GENERATOR SHALL BE PRODUCTS OF THE SAME MANUFACTURER.
2. REFER TO AUTOMATIC TRANSFER SWITCH SPECIFICATION FOR ADDITIONAL REQUIREMENTS

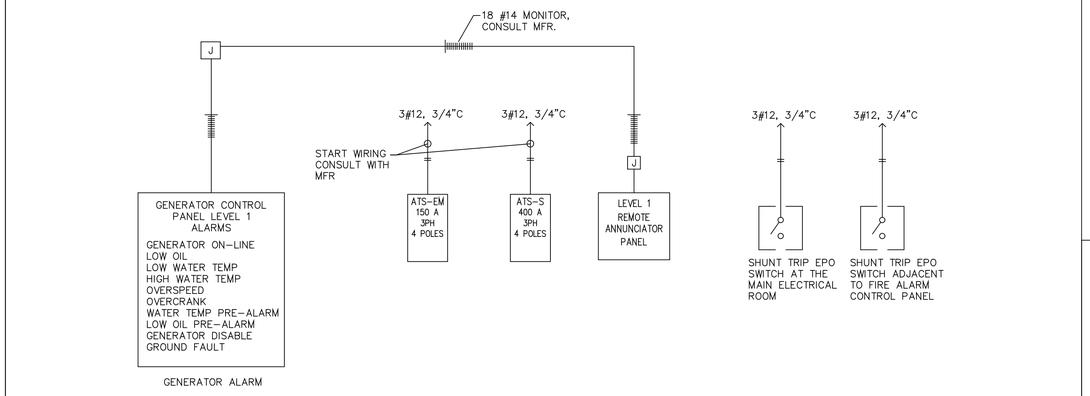

GENERATOR ALARM RISER

NOT TO SCALE

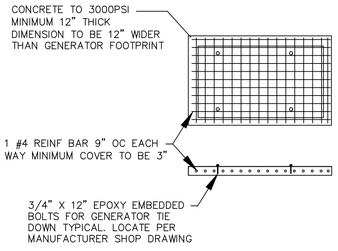

GENERATOR CONCRETE PAD, PROVIDED AND INSTALLED BY THE CONTRACTOR. COORDINATE FINAL SUPPORT, SIZES AND REQUIREMENTS WITH STRUCTURAL ENGINEER. SUBMIT SIGNED AND SEALED DRAWINGS FOR CONCRETE PAD, GENERATOR MOUNTING DETAILS BY FLORIDA PROFESSIONAL STRUCTURAL ENGINEER. COORDINATE WITH MANUFACTURER FOR REQUIREMENTS.

GENERATOR CONCRETE PAD DETAIL

NOT TO SCALE

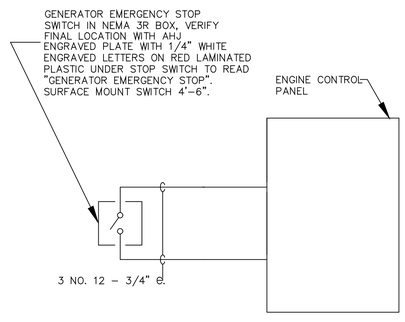

WIRING DIAGRAM FOR GENERATOR EMERGENCY STOP SWITCH

NOT TO SCALE

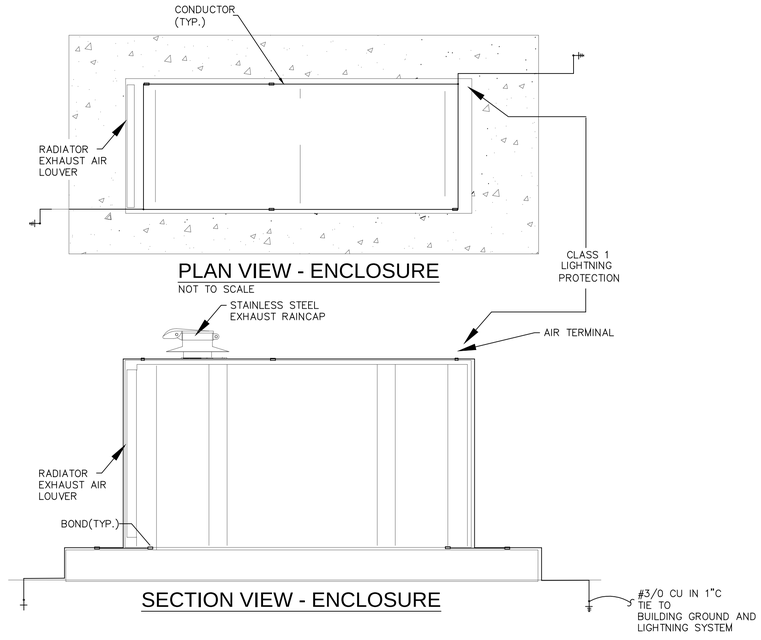

PLAN VIEW - ENCLOSURE

NOT TO SCALE

SECTION VIEW - ENCLOSURE

GENERATOR LIGHTNING PROTECTION DETAIL

NOT TO SCALE

GENERATOR DETAILS

SCALE: N.T.S.

CITY OF TAMPA
CONTRACT ADMINISTRATION DEPARTMENT
PLANNING AND DESIGN DIVISION
306 E. JACKSON STREET 4 NORTH
TAMPA, FLORIDA 33602
p: 813. 274. 8456 - f: 813. 274. 8080
url: www.tampagov.net

James E. Jackson, Jr. AIA, NOMA
City Architect
Edward D. Rice, AIA
Project Architect
Kevin L. Henika, AIA
Project Architect
Thomas A. Hester, Sr., AIA, NOMA
Project Architect
David R. Pagitt
Supervisor, Architectural Drafting
Kinsey C. Tillman
Drafting Technician
Jerry P. Sanders
Drafting Technician
Byron K. Thomas, LEED AP
Drafting Technician

MEP CONSULTANT
GRINER ENGINEERING, INC.
1628 1st. AVENUE NORTH
ST. PETERSBURG, FL 33713

STRUCTURAL CONSULTANT
BILLER REINHART STRUCTURAL GROUP, INC.
4014 GUNN HWY. SUITE 248
TAMPA, FL 33713

CIVIL CONSULTANT
B M CIVIL LLC
12315 WYCLIFF PLACE
TAMPA, FL 33626

LANDSCAPE CONSULTANT
DAVID CONNER & ASSOCIATES
1509 W. SWANN AVENUE,SUITE 255
TAMPA, FL 33606

FIRE STATION 23
20770 TROUT CREEK DR.
TAMPA, FL 33647

DPW FILE NUMBER

DPW NUMBER
17-C-00037

ISSUE DATE
07-28-2017

DRAWN BY

REVISIONS

SEAL

Jose A Rosario, P.E. FL. 74457

SCALE: N.T.S.

GENERATOR DETAILS

SHEET NUMBER
E4.5
X OF X

GRINER ENGINEERING, INC.
1628 First Avenue North
St. Petersburg, Florida 33713
Phone: (727)-822-2335
Fax: (727)-821-3361
Certificate of Authorization #3173

Date	06-15-2017
Drawn	HH
Designed	HH
EOR	JAR
Job no.	17049

FIRE STATION #23, TAMPA FLORIDA

LIGHTING FIXTURE SCHEDULE

TYPE	MANUFACTURER	CATALOG NUMBER	DESCRIPTION	LAMPS		VOLTS	MOUNTING	REMARKS/PROVIDE	INPUT WATTS
				Qty	Type				
A	WILLIAMS	LT-22-L34/840-AF-DIM-UNV	LOW PROFILE LED 2x4 TROFFER	1	LED	120	RECESSED	1. UL LISTED FOR DAMP LOCATION	40
B	LUMINAIRE	VPF84-25W-4000K-120/277-OP-WHT-WET	RECESSED LUMINAIRE WITH ALL ALUMINUM CONSTRUCTIO	1	LED	UNV	SURFACE	1. UL LISTED FOR WET LOCATION	50
D	WILLIAMS	BS100LED-4HT-HO-WT40-120/277	4' LED, DLC LINEAR AMBIENT LUMINAIRE, UV STABILIZED POLYCARBONATE DIFFUSER	1	LED	120	SURFACE	1. UL LISTED FOR DAMP LOCATION	50
F	WILLIAMS	39-4-L30/840-A-DIM-UNV	SURFACE MOUNT WRAP	1	LED	120	SURFACE	1. UL LISTED FOR DAMP LOCATION	25
F1	WILLIAMS	39-4-L52/840-A-DIM-UNV	SURFACE MOUNT WRAP	3	LED	120	SURFACE	1. UL LISTED FOR DAMP LOCATION	51
T	HYDREL	8100-P3-40K-MVOLT-WEL	LED FLOOD LIGHT	1	LED	120	GRADE	1. UL LISTED FOR WET LOCATION. 2. WIDE DISTRIBUTION.	129
X	BEGHELLI	VA5 R HT	THERMOPLASTIC EXIT SIGN, DAMP LOCATION		LED	120	SURFACE	1. UL LISTED FOR DAMP LOCATION	3
AA	PHILIPS	101L-16L-530-NW-G1-4-EBPC-UNV	EXTERIOR WALL MOUNTED LED LIGHT FIXTURE	1	LED	120	WALL	1. UL LISTED FOR WET LOCATION	52
BB	WILLIAMS	L60-L30C-840-CS-M-120/277-DIM	6" RECESSED DOWNLIGHT, DAMP LOCATION	1	LED	120	RECESSED	1. UL LISTED FOR DAMP LOCATION	64
DD	BEGHELLI OR EQUAL	BS100LED-4HT-HO-WT40-120/277	HIGH LUMINOUS EFFICIENCY PARABOLIC STEEL REFLECTOR, UV STABILIZED POLYCARBONATE DIFFUSER	2	LED	120	SURFACE		70

LIGHTING NOTES:

1. EQUAL MANUFACTURER SHALL BE: LITHONIA LIGHTING, DAYBRITE LIGHTING, COOPER LIGHTING AND COLUMBIA LIGHTING.
2. CONFIRM ALL CEILING TYPES, LOCATIONS AND MANUFACTURER MODEL NUMBERS PRIOR TO BID AND ORDERING.
3. PROVIDE COMPLETE INDEPENDENT AND SECURE SUPPORT FROM THE BUILDING STRUCTURE FOR ALL LUMINAIRES. THE LUMINAIRES SHALL BE SUPPORTED FROM ALL CORNERS.
4. ALL LAMPS SHALL BE 90+ CRI AND 3500K OR AS NOTED.
5. ALL FLUORESCENT BALLASTS SHALL BE PROGRAMABLE/RAPID START "HIGH FREQ" ELECTRONIC WITH MAXIMUM 10% THD, FUSED AND UNIVERSAL VOLTAGE 120/277V BY OSRAM/SYLVANIA.
6. ALL METAL COMPONENTS OF THE LUMINARIES SHALL BE FACTORY PAINTED AFTER FABRICATION.
7. CONTRACTOR SHALL VERIFY ALL "TYPE, TRIMS AND LIGHT FIXTURE COLORS" WITH ARCHITECT AND OWNER PRIOR TO ORDERING.
8. PROVIDE MINIMUM SIX (6) SETS OF SHOP DRAWINGS FOR BALLAST, LAMPS AND FIXTURES.
9. ALL LAMPS SHALL BE CERTIFIED AS PASSING EPA "TOXICITY CHARACTERISTIC LEACH PROCEDURE", LOW MERCURY TYPE AS MANUFACTURED BY SYLVANIA OR PHILLIPS.
10. PROVIDE 6 YEARS BALLAST AND 4 YEARS LAMP REPLACEMENT FACTORY WARRANTY.
11. NOT USED.
12. THE ABOVE LUMINARIES IS PREDICATED ON PERFORMANCE AND DESIGNED TO MEET CERTAIN AESTHETIC CRITERIA.
13. PROVIDE BALLAST AND LUMINARIES WITH RF FILTER.
14. "SUBSTITUTE" OR "EQUAL" LUMINARIES, LAMPS, AND LAYOUTS NOTES:

a. ALL OF THE CRITERIA BELOW FOR SUBSTITUTE LUMINARIES MUST BE SATISFIED, OTHERWISE, THE ENGINEER WILL REJECT THE "SUBSTITUTE" OR "EQUAL" LIGHTING FIXTURES WITHOUT REVIEW.

b. ANY "SUBSTITUTE" OR "EQUAL" LUMINARIES, LAMPS, LAYOUTS, LEVELS MUST NOT DEVIATE FROM PROVIDED.

c. ANY "SUBSTITUTE" OR "EQUAL" LUMINARIES MUST BE SUBMITTED TO ENGINEER FOR APPROVAL AT LEAST TENS (10) DAYS PRIOR TO ACTUAL PROJECT BID DATE FOR PRELIMINARY APPROVAL.

d. THE ENGINEER MAY REQUIRE FROM THE CONTRACTOR TO SUBMIT TO ENGINEER FOR REVIEW AND APPROVAL THE LIGHTING PHOTOMETRICS WITH THE "SUBSTITUTE" OR "EQUAL" LUMINAIRES FOR ANY SPECIFIC ROOMS OR/AND AREAS OR FOR THE WHOLE PROJECT FOR VERIFICATION OF PERFORMANCE AND LIGHTING LEVELS. THE SUBMITTED LIGHTING PHOTOMETRIC PACKAGE SHALL INCLUDE THE MINIMUM ITEMS:
   1. HARDCOPY OF THE LIGHTING PHOTOMETRIC.
   2. ELECTRONIC (AUTOCAD FILE) OF THE LIGHTING PHOTOMETRIC.
   3. MANUFACTURER CUT SHEETS OF THE LIGHTING FIXTURES, SUPPORT, AND LAMPS.

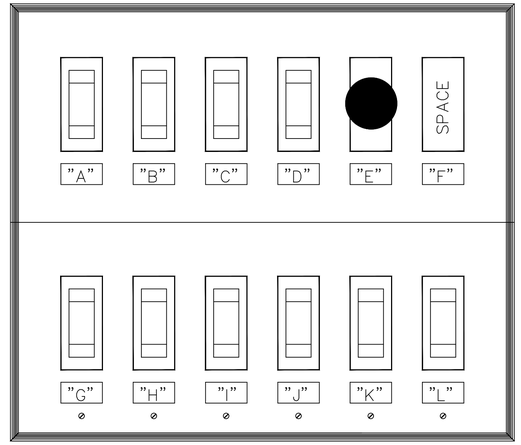

CONTROL PANEL DETAIL

NOT TO SCALE

CONTROL PANEL SCHEDULE

SWITCH DESIGNATION	SWITCH TYPE	DESIGNATION	NOTE
A	LOW VOLTAGE	EXTERIOR WALL PACK NORTH LIGHTS	
B	LOW VOLTAGE	EXTERIOR WALL PACK SOUTH LIGHTS	
C	LOW VOLTAGE	EXTERIOR SITE LIGHTS	
D	LOW VOLTAGE	MASTER OVERRIDE NORMAL LIGHTING	
E	20A-1P MAINTAINED CONTACT PUSH BUTTON WITH RED MUSHROOM HEAD	RESPONSE CALL BELLS	
F	SPACE		
G	20A-1P MOMENTARY CONTACT PUSHBUTTON	PROVIDE 120V CONNECTION TO FRONT OVERHEAD DOOR MOTOR STARTER "UP" CONTACT ONLY	
H	20A-1P MOMENTARY CONTACT PUSHBUTTON	PROVIDE 120V CONNECTION TO FRONT OVERHEAD DOOR MOTOR STARTER "UP" CONTACT ONLY	
I	20A-1P MOMENTARY CONTACT PUSHBUTTON	PROVIDE 120V CONNECTION TO FRONT OVERHEAD DOOR MOTOR STARTER "UP" CONTACT ONLY	
J	20A-1P MOMENTARY CONTACT PUSHBUTTON	PROVIDE 120V CONNECTION TO FRONT OVERHEAD DOOR MOTOR STARTER "UP" CONTACT ONLY	
K	20A-1P MOMENTARY CONTACT PUSHBUTTON	PROVIDE 120V CONNECTION TO FRONT OVERHEAD DOOR MOTOR STARTER "UP" CONTACT ONLY	
L	20A-1P MOMENTARY CONTACT PUSHBUTTON	PROVIDE 120V CONNECTION TO FRONT OVERHEAD DOOR MOTOR STARTER "UP" CONTACT ONLY	

CONTROL PANEL SCHEDULE

NOT TO SCALE

1. CONTRACTOR SHALL COORDINATE THE FINAL LAYOUT AND REQUIREMENTS WITH OWNER PRIOR TO ROUGH-IN AND INSTALLATION.

2. CONTROL PANEL SHALL BE FLUSHED MOUNTED IN COUNTER TOP. COORDINATE WITH ARCHITECTURAL DETAILS AND OWNER.

CITY OF TAMPA
CONTRACT ADMINISTRATION DEPARTMENT
PLANNING AND DESIGN DIVISION
306 E. JACKSON STREET 4 NORTH
TAMPA, FLORIDA 33602
p: 813. 274. 8456 – f: 813. 274. 8080
url: www.tampagov.net

James E. Jackson, Jr. AIA, NOMA
City Architect
Edward D. Rice, AIA
Project Architect
Kevin L. Henika, AIA
Project Architect
Thomas A. Hester, Sr., AIA, NOMA
Project Architect
David R. Pagitt
Supervisor, Architectural Drafting
Kinsey C. Tillman
Drafting Technician
Jerry P. Sanders
Drafting Technician
Byron K. Thomas, LEED AP
Drafting Technician

MEP CONSULTANT
GRINER ENGINEERING, INC.
1628 1st. AVENUE NORTH
ST. PETERSBURG, FL 33713

STRUCTURAL CONSULTANT
BILLER REINHART STRUCTURAL GROUP, INC.
4014 GUNN HWY. SUITE 248
TAMPA, FL 33713

CIVIL CONSULTANT
B M CIVIL LLC
12315 WYCLIFF PLACE
TAMPA, FL 33626

LANDSCAPE CONSULTANT
DAVID CONNER & ASSOCIATES
1509 W. SWANN AVENUE,SUITE 255
TAMPA, FL 33606

FIRE STATION 23
20770 TROUT CREEK DR.
TAMPA, FL 33647

DPW FILE NUMBER

DPW NUMBER
17-C-00037

ISSUE DATE
07-28-2017

DRAWN BY

REVISIONS

SEAL

Jose A Rosario, P.E. FL. 74457

SCALE: N.T.S.

ELECTRICAL LIGHTING FIXTURE SCHEDULE AND CONTROL PANEL DETAILS

SHEET NUMBER
E5.1
X OF X

GRINER
GRINER ENGINEERING, INC.
1628 First Avenue North
St. Petersburg, Florida 33713
Phone: (727)-822-2335
Fax: (727)-821-3361
Certificate of Authorization #3173

Date	06-15-2017
Drawn	HH
Designed	HH
EOR	JAR
Job no.	17049

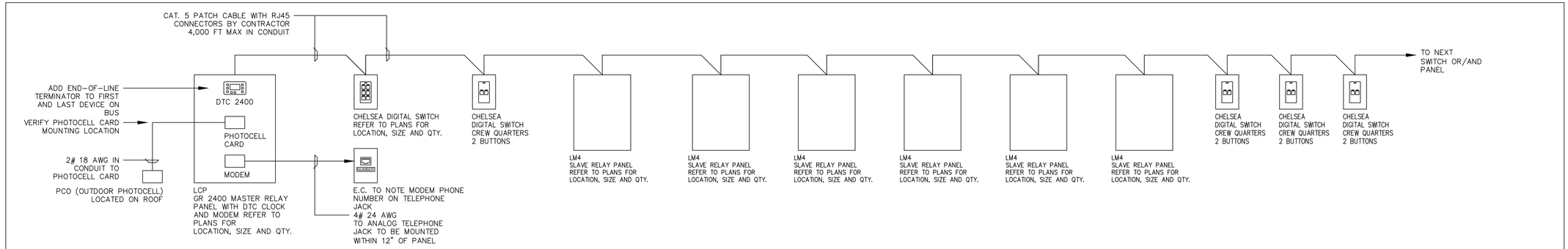

LIGHTING CONTROL ONE-LINE DIAGRAM

NOT TO SCALE

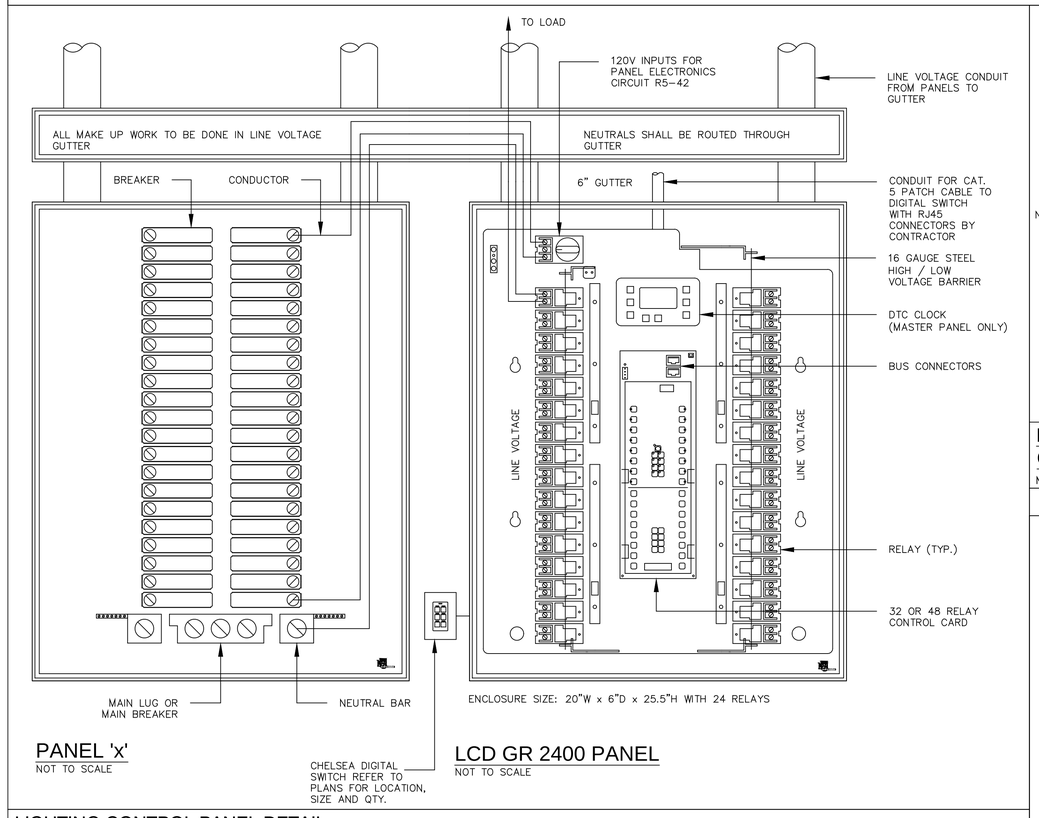

PANEL 'x'

NOT TO SCALE

LCD GR 2400 PANEL

NOT TO SCALE

LIGHTING CONTROL PANEL DETAIL

NOT TO SCALE

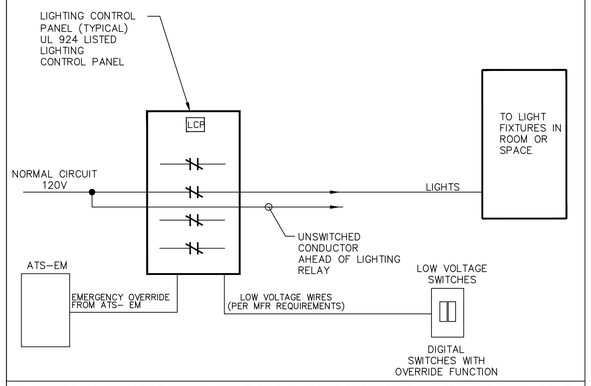

LIGHTING CONTROL DIAGRAM-LIGHTING CONTROL PANEL AND GENERATOR TRANSFER DEVICE (GTD)

NOT TO SCALE

SPECIFICATION

1. LIGHTING CONTROL SYSTEM SHALL BE DIGITAL AND CONSIST OF A MASTER LCP (LM24) WITH 24 INDIVIDUAL RELAYS, AND SLAVE LM4 (TOTAL OF 6) WITH 4 INDIVIDUAL RELAYS, DIGITAL SWITCHES AND DIGITAL INTERFACE CARDS. ALL SYSTEM COMPONENTS SHALL CONNECT IN A "DAISY CHAIN" STYLE CONFIGURATION AND BE CONTROLLED VIA CATEGORY 5 PATCH CABLE WITH RJ45 CONNECTORS, PROVIDING REAL-TIME TWO-WAY COMMUNICATION WITH EACH SYSTEM COMPONENT. ANALOG SYSTEMS ARE NOT ACCEPTABLE. ALL CABLES SUPPLIED BY CONTRACTOR. MASTER LIGHTING CONTROL PANEL SHALL HAVE SOFTWARE CARD FOR COMMUNICATION INTERFACE WITH HVAC CONTROLS PANEL.
2. MASTER LIGHTING CONTROL SHALL BE UL924 LISTED FOR EMERGENCY LIGHTING. PROVIDE CONTACT AND INTERCONNECT THE LIGHTING CONTROL PANEL AND EMERGENCY TRANSFER SWITCH (EM). WHEN THE POWER IS TRANSFERRED TO EMERGENCY GENERATOR, THE LIGHTING CONTROL SHALL OVER-RIDE ALL LIGHTING CONTROL AND TURN ON ALL EMERGENCY LIGHTING.
3. LIGHTING CONTROL SHALL BE FAIL SAFE IN ON FUNCTION IN EVENT OF A DEVICE/ELECTRONICS FAILURE (THE LIGHTING CONTROL SHALL TURN ON ALL EMERGENCY LIGHTING.
4. RELAY PANELS SHALL BE PRE-WIRED, PRE-ASSEMBLED, PREPROGRAMMED AND LISTED TO UL916 (NORMAL) AND UL924 (EMERGENCY), PANELS SHALL BE PROVIDED WITH DUAL VOLTAGE POWER SUPPLY AND 16 GAUGE BARRIERS TO SEPARATE HIGH AND LOW VOLTAGE, NORMAL AND EMERGENCY POWER.
5. STANDARD RELAYS SHALL HAVE NORMALLY CLOSED (NC) CONTACTS RATED FOR 120V 20A TUNGSTEN, BALLAST OR HID. STANDARD RELAYS SHALL BE ZERO-CROSS TYPE. NO EXCEPTIONS. OPTIONAL 600V, 2-POLE RELAY, NO OR NC.
6. ALL INCANDESCENT LIGHTING CIRCUITS SHALL BE CONTROLLED BY A NC/SOFT START RELAY. NO EXCEPTIONS.
7. RELAY PANEL ELECTRONICS SHALL PROVIDE CURRENT VISUAL STATUS AND CONTROL OF EACH RELAY OR ZONE. ALL SYSTEM CONTROL ELECTRONICS SHALL STORE PROGRAMMING IN A NON-VOLATILE MEMORY AND PROVIDE 10 YEAR BATTERY BACK UP FOR TIME OF DAY.
8. LIGHTING CONTROL SYSTEM SHALL CONSIST OF MASTER AND SLAVE PANEL(S) CONTROLLED BY A 32-CHANNEL DIGITAL TIME CLOCK (DTC) THAT CONTROLS AND PROGRAMS THE ENTIRE LIGHTING CONTROL SYSTEM. THE DTC SHALL SUPPLY ALL TIME FUNCTIONS AND ACCEPT OTHER INPUTS. THE DTC SHALL ACCEPT CONTROL LOCALLY USING BUILT IN BUTTON PROMPTS AND THE USE OF AN 8 LINE 21-LETTER DISPLAY, FROM A COMPUTER, MODEM, ETHERNET OR INTERNET. ALL COMMANDS SHALL BE IN PLAIN ENGLISH. HELP PAGES SHALL DISPLAY ON THE DTC SCREEN.
9. ALL SWITCHES SHALL COMMUNICATE VIA RS 485, CAT 5 PATCH CABLE WITH RJ45 CONNECTORS. CONTACT CLOSURE STYLE SWITCHES ARE NOT ACCEPTABLE. ANY SWITCH BUTTON FUNCTION SHALL BE ABLE TO BE CHANGED LOCALLY (AT THE DTC OR A PC) OR REMOTELY, VIA MODEM, ETHERNET OR INTERNET. REFER TO SINGLE LINE DIAGRAM FOR WIRING DETAILS. SWITCHES WHICH CANNOT BE PROGRAMMED REMOTELY SHALL NOT BE ACCEPTABLE.
10. PHOTOCELL, EXTERIOR (PCO) OR INTERIOR (PCI), SHALL PROVIDE READOUT ON THE DTC SCREEN IN NUMBER VALUES ANALOGOUS TO FOOT-CANDLES. EACH PHOTOCELL SHALL PROVIDE A MINIMUM OF 14 TRIGGER POINTS. EACH TRIGGER CAN BE PROGRAMMED TO CONTROL ANY RELAY OR ZONE. EACH TRIGGER SHALL BE SET THROUGH DTC, LOCALLY OR REMOTELY. PHOTOCELLS THAT REQUIRE THE USE OF SET SCREWS OR MANUAL ADJUSTMENTS AT THE PHOTOCELL CONTROL CARD SHALL NOT BE ACCEPTABLE.
11. LIGHTING CONTROL SYSTEM INTERFACES TO INCLUDE A DRY CONTACT INPUT INTERFACE, BMS INTERFACE, ETHERNET/INTERNET INTERFACE. VERIFY AND INSTALL ONLY THOSE INTERFACES INDICATED ON THE PLANS.
12. STANDARD LIGHTING CONTROL SYSTEM SOFTWARE, PRE-INSTALLED INTO THE DTC, SHALL CONSIST OF AND USE STANDARD GRAPHICAL MANAGEMENT SOFTWARE (GMS) PAGES. GMS SOFTWARE SHALL PROVIDE, VIA LOCAL OR REMOTE PC, A VISUAL REPRESENTATION OF EACH DEVICE ON THE BUS, SHOW REAL TIME STATUS AND THE ABILITY TO CHANGE THE STATUS OF ANY INDIVIDUAL DEVICE, RELAY OR ZONE. OPTIONAL SOFTWARE THAT ACCEPTS JOB SPECIFIC GRAPHICS SHALL BE AVAILABLE.
13. START UP: EC SHALL CONTACT LC&D AT LEAST 7 DAYS BEFORE TURNOVER OF PROJECT. LC&D WILL REMOTELY DIAL INTO THE LIGHTING CONTROL SYSTEM, RUN DIAGNOSTICS AND CONFIRM SYSTEM PROGRAMMING. EC SHALL BE AVAILABLE AT THE TIME OF DIAL IN TO PERFORM ANY CORRECTIONS REQUIRED BY LC&D. EC IS RESPONSIBLE FOR COORDINATING WITH GC AND THE OWNER, THE INSTALLATION OF A DEDICATED TELEPHONE LINE OR A SHARED PHONE LINE WITH A/B SWITCH. PHONE JACK TO BE MOUNTED WITHIN 12" OF MASTER LCP. LABEL JACK WITH PHONE NUMBER. EC SHALL CONNECT PHONE LINE FROM JACK TO MASTER LCP.
14. TELEPHONE FACTORY DIAL-UP SUPPORT SHALL BE AVAILABLE AT NO ADDITIONAL COST TO THE EC OR OWNER BOTH DURING AND AFTER THE 3 YEAR WARRANTY PERIOD. FACTORY TO PREPROGRAM THE LIGHTING CONTROL SYSTEM PER PLANS AND APPROVED SUBMITTAL. THE LIGHTING CONTROL MANUFACTURER, AT NO ADDED COST, SHALL PROVIDE ADDITIONAL PROGRAMMING VIA MODEM AS REQUIRED BY THE EC OR OWNER FOR THE OPERATIONAL LIFE OF THE SYSTEM. MANUFACTURER WARRANTS THAT THE DTC SOFTWARE CAN BE UPGRADED AND MONITORED REMOTELY.
15. SHOP DRAWINGS: SUBMIT DIMENSIONED DRAWINGS OF LIGHTING CONTROL SYSTEM AND ACCESSORIES INCLUDING, BUT NOT NECESSARILY LIMITED TO, RELAY PANELS, SWITCHES, DTC, PHOTOCELLS AND OTHER INTERFACES. DRAWINGS SHALL INDICATE EXACT LOCATION AND PROGRAMMING OF EACH DEVICE. INDICATE ALL TIME SCHEDULES AND SWITCH BUTTON ENGRAVING.
16. LIGHTING CONTROL SYSTEM TO BE MANUFACTURED BY LIGHTING CONTROL & DESIGN, OR APPROVED EQUIVALENT.
17. CONTRACTOR SHALL INCLUDE MINIMUM (4) HOURS IN HIS BID PROPOSAL FOR OWNER'S TRAINING. THE TRAINING TO BE PERFORMED AFTER COMPLETION OF LIGHTING CONTROL SYSTEM.

ELECTRICAL LIGHTING RISER AND DETAILS

SCALE: N.T.S.

GRINER ENGINEERING, INC.
1628 First Avenue North
St. Petersburg, Florida 33713
Phone: (727)-822-2335
Fax: (727)-821-3361
Certificate of Authorization #3173

Date	06-15-2017
Drawn	HH
Designed	HH
EOR	JAR
Job no.	17049

CITY OF TAMPA
CONTRACT ADMINISTRATION DEPARTMENT
PLANNING AND DESIGN DIVISION
306 E. JACKSON STREET 4 NORTH
TAMPA, FLORIDA 33602
p: 813. 274. 8456 - f: 813. 274. 8080
url: www.tampagov.net

James E. Jackson, Jr. AIA, NOMA
City Architect
Edward D. Rice, AIA
Project Architect
Kevin L. Henika, AIA
Project Architect
Thomas A. Hester, Sr., AIA, NOMA
Project Architect
David R. Pagitt
Supervisor, Architectural Drafting
Kinsey C. Tillman
Drafting Technician
Jerry P. Sanders
Drafting Technician
Byron K. Thomas, LEED AP
Drafting Technician

MEP CONSULTANT
GRINER ENGINEERING, INC.
1628 1st. AVENUE NORTH
ST. PETERSBURG, FL 33713

STRUCTURAL CONSULTANT
BILLER REINHART STRUCTURAL GROUP, INC.
4014 GUNN HWY. SUITE 248
TAMPA, FL 33713

CIVIL CONSULTANT
5 M CIVIL LLC
12315 WYCLIFF PLACE
TAMPA, FL 33626

LANDSCAPE CONSULTANT
DAVID CONNER & ASSOCIATES
1509 W. SWANN AVENUE,SUITE 255
TAMPA, FL 33606

FIRE STATION 23
20770 TROUT CREEK DR.
TAMPA, FL 33647

DPW FILE NUMBER

DPW NUMBER
17-C-00037

ISSUE DATE
07-28-2017

DRAWN BY

REVISIONS

SEAL

Jose A Rosario, P.E. FL. 74457

SCALE: N.T.S.

ELECTRICAL LIGHTING SYSTEM RISER AND DETAILS

SHEET NUMBER
E5.2
X OF X

FIRE STATION 23, TAMPA
LIGHTING CONTROL SCHEDULES

MASTER LIGHTING CONTROL PANEL (MLCP) BY LCD, LOCATED IN ELECTRICAL ROOM

RELAY	CONTROL	LOAD					
NO	N / EM	BRANCH CIRCUIT	VOLT AC	CIRCUIT DESIGNATION	FIXTURE TYPE	CONTROL DESCRIPTION	NOTE
1	EM	EM-1	120	APPARATUS BAY	LED		RELAY DESIGNATION "e1" - 100% LIGHTS
2	EM	EM-3	120	APPARATUS BAY	LED		RELAY DESIGNATION "e2" - 100% LIGHTS
3	EM	EM-5	120	ACTIVITY AREA	LED		RELAY DESIGNATION "e3" - 50% LIGHTS
4	EM			ACTIVITY AREA	LED		RELAY DESIGNATION "e4" - 100% LIGHTS
5	EM			KITCHEN	LED		RELAY DESIGNATION "e5" - 50% LIGHTS
6	EM			KITCHEN	LED		RELAY DESIGNATION "e6" - 100% LIGHTS
7	EM	EM-9	120	CORRIDOR QUARTERS	LED		RELAY DESIGNATION "e7" - 100% LIGHTS
8	EM			CORRIDOR QUARTERS	LED		RELAY DESIGNATION "e8" - 50% LIGHTS
9	EM	EM-4	120	APPARATUS BAY EXTERIOR S. WALL LIGHTING FIXTURES	LED	PHOTOCELL ON/TIMECLOCK OFF	RELAY DESIGNATION "e9" - 100% LIGHTS. PROVIDE WITH OVER-RIDE LOW VOLTAGE SWITCH AT CONTROL PANEL IN OFFICE
10	EM			APPARATUS BAY EXTERIOR N. WALL LIGHTING FIXTURES	LED	PHOTOCELL ON/TIMECLOCK OFF	RELAY DESIGNATION "e10" - 100% LIGHTS. PROVIDE WITH OVER-RIDE LOW VOLTAGE SWITCH AT CONTROL PANEL IN OFFICE
11	EM			EXTERIOR BUILDING WALL PACKS	LED	PHOTOCELL ON/TIMECLOCK OFF	RELAY DESIGNATION "e11" - 100% LIGHTS. PROVIDE WITH OVER-RIDE LOW VOLTAGE SWITCH AT CONTROL PANEL IN OFFICE
12	EM	EM-2	120	EXTERIOR BUILDING DOWNLIGHTS COVERED PATIO	LED	PHOTOCELL ON/TIMECLOCK OFF	RELAY DESIGNATION "e12" - 100% LIGHTSPROVIDE WITH OVER-RIDE LOW VOLTAGE SWITCH IN COVERED PATIO
13	EM	EM-23,25	208	SITE LIGHTING	LED	PHOTOCELL ON/TIMECLOCK OFF	RELAY DESIGNATION "e13,e14" - 100% PROVIDE WITH OVER-RIDE LOW VOLTAGE SWITCH PER OWNER'S DIRECTION
14							
15	EM	EM-27,29	208	SITE LIGHTING	LED	PHOTOCELL ON/TIMECLOCK OFF	RELAY DESIGNATION "e15,e16" - 100% PROVIDE WITH OVER-RIDE LOW VOLTAGE SWITCH PER OWNER'S DIRECTION
16							
17	EM			SPARE			
18	EM			SPARE			
19	N	SA-1	120	APPARATUS BAY	LED		RELAY DESIGNATION "a1" - 100% LIGHTS
20	N	SA-3	120	APPARATUS BAY	LED		RELAY DESIGNATION "a2" - 100% LIGHTS
21	N	SB-35	120	SPARE	LED	PHOTOCELL ON/TIMECLOCK OFF	RELAY DESIGNATION "a3" - 100% LIGHTS
22	N			SPARE			
23	N			SPARE			
24	N			SPARE			
SLAVE LIGHTING CONTROL PANEL (SLCP1) BY LCD, LOCATED ABOVE CEILING IN QUARTER							
1	N	SA-5	120	CREW QUARTER LIGHTING	LED		RELAY DESIGNATION "a11" - 50% LIGHTS
2	N	SA-5	120	CREW QUARTER LIGHTING	LED		RELAY DESIGNATION "a12" - 100% LIGHTS
3	N	SA-5	120	CREW QUARTER LIGHTING	LED		RELAY DESIGNATION "a13" - 50% LIGHTS
4	N	SA-5	120	CREW QUARTER LIGHTING	LED		RELAY DESIGNATION "a14" - 100% LIGHTS
SLAVE LIGHTING CONTROL PANEL (SLCP2) BY LCD, LOCATED ABOVE CEILING IN QUARTER							
1	N	SA-5	120	CREW QUARTER LIGHTING	LED		RELAY DESIGNATION "a21" - 50% LIGHTS
2	N	SA-5	120	CREW QUARTER LIGHTING	LED		RELAY DESIGNATION "a22" - 100% LIGHTS
3	N	SA-5	120	CREW QUARTER LIGHTING	LED		RELAY DESIGNATION "a23" - 50% LIGHTS
4	N	SA-5	120	CREW QUARTER LIGHTING	LED		RELAY DESIGNATION "a24" - 100% LIGHTS
SLAVE LIGHTING CONTROL PANEL (SLCP3) BY LCD, LOCATED ABOVE CEILING IN QUARTER							
1	N	SA-5	120	CREW QUARTER LIGHTING	LED		RELAY DESIGNATION "a31" - 50% LIGHTS
2	N	SA-5	120	CREW QUARTER LIGHTING	LED		RELAY DESIGNATION "a32" - 100% LIGHTS
3	N	SA-5	120	CREW QUARTER LIGHTING	LED		RELAY DESIGNATION "a33" - 50% LIGHTS
4	N	SA-5	120	CREW QUARTER LIGHTING	LED		RELAY DESIGNATION "a34" - 100% LIGHTS
SLAVE LIGHTING CONTROL PANEL (SLCP4) BY LCD, LOCATED ABOVE CEILING IN QUARTER							
1	N	SA-5	120	CREW QUARTER LIGHTING	LED		RELAY DESIGNATION "a41" - 50% LIGHTS
2	N	SA-5	120	CREW QUARTER LIGHTING	LED		RELAY DESIGNATION "a42" - 100% LIGHTS
3	N	SA-5	120	CREW QUARTER LIGHTING	LED		RELAY DESIGNATION "a43" - 50% LIGHTS
4	N	SA-5	120	CREW QUARTER LIGHTING	LED		RELAY DESIGNATION "a44" - 100% LIGHTS
SLAVE LIGHTING CONTROL PANEL (SLCP5) BY LCD, LOCATED ABOVE CEILING IN QUARTER							
1	N	SA-5	120	CREW QUARTER LIGHTING	LED		RELAY DESIGNATION "a45" - 50% LIGHTS
2	N	SA-5	120	CREW QUARTER LIGHTING	LED		RELAY DESIGNATION "a46" - 100% LIGHTS
3	N	SA-5	120	CREW QUARTER LIGHTING	LED		RELAY DESIGNATION "a47" - 50% LIGHTS
4	N	SA-5	120	CREW QUARTER LIGHTING	LED		RELAY DESIGNATION "a48" - 100% LIGHTS

ELECTRICAL LIGHTING CONTROL SCHEDULE
SCALE: N.T.S.

CITY OF TAMPA
CONTRACT ADMINISTRATION DEPARTMENT
PLANNING AND DESIGN DIVISION
306 E. JACKSON STREET 4 NORTH
TAMPA, FLORIDA 33602
p: 813. 274. 8456 – f: 813. 274. 8080
url: www.tampagov.net

James E. Jackson, Jr. AIA, NOMA
City Architect
Edward D. Rice, AIA
Project Architect
Kevin L. Henika, AIA
Project Architect
Thomas A. Hester, Sr., AIA, NOMA
Project Architect
David R. Pagitt
Supervisor, Architectural Drafting
Kinsey C. Tillman
Drafting Technician
Jerry P. Sanders
Drafting Technician
Byron K. Thomas, LEED AP
Drafting Technician

MEP CONSULTANT
GRINER ENGINEERING, INC.
1628 1st. AVENUE NORTH
ST. PETERSBURG, FL 33713

STRUCTURAL CONSULTANT
BILLER REINHART STRUCTURAL GROUP, INC.
4014 GUNN HWY. SUITE 248
TAMPA, FL 33713

CIVIL CONSULTANT
B M CIVIL LLC
12315 WYCLIFF PLACE
TAMPA, FL 33626

LANDSCAPE CONSULTANT
DAVID CONNER & ASSOCIATES
1509 W. SWANN AVENUE,SUITE 255
TAMPA, FL 33606

FIRE STATION 23
20770 TROUT CREEK DR.
TAMPA, FL 33647

DPW FILE NUMBER

DPW NUMBER
17-C-00037

ISSUE DATE
07-28-2017

DRAWN BY

REVISIONS

SEAL

Jose A Rosario, P.E. FL. 74457

SCALE: N.T.S.

ELECTRICAL LIGHTING CONTROL SCHEDULE

SHEET NUMBER
E5.3
X OF X

GRINER
GRINER ENGINEERING, INC.
1628 First Avenue North
St. Petersburg, Florida 33713
Phone: (727)-822-2335
Fax: (727)-821-3361
Certificate of Authorization #3173

Date	06-15-2017
Drawn	HH
Designed	HH
EOR	JAR
Job no.	17049

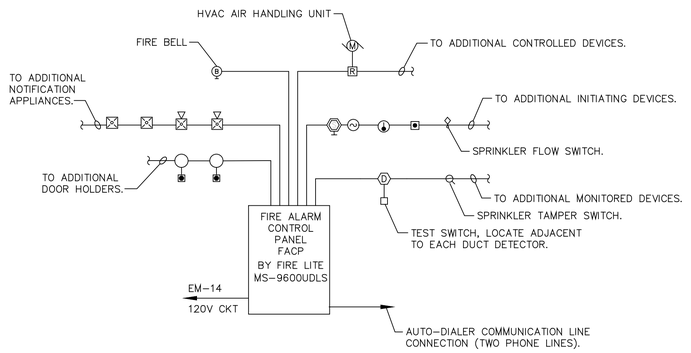

ADDRESSABLE FIRE ALARM RISER

1. THE FIRE ALARM CONTROL (FACP) SHALL BE NON PROPRIETARY AND IS MANUFACTURED BY FIRE LITE MODEL MS-9600UDLS W/DACT-2UD OR APPROVED BY ENGINEER AND OWNER EQUAL.
2. THE FIRE ALARM CONTRACTOR SHALL SUBMIT SHOP DRAWINGS OF THE PROPOSED ADDRESSABLE BUILDING FIRE ALARM SYSTEM, INCLUDING ALL DEVICES AND WIRING LAYOUTS, BATTERY CALCULATIONS AND SEQUENCE OF OPERATION (IN PLAN FORM), TO THE FIRE MARSHAL FOR APPROVAL PRIOR TO SUBMITTING TO ENGINEER FOR REVIEW. ANY REVISIONS AND/OR ADDITIONS REQ'D. BY THE LOCAL JURISDICTION PRIOR TO OBTAINING CERTIFICATE OF OCCUPANCY ARE THE RESPONSIBILITY OF THE CONTRACTOR AND WILL NOT BE REASON FOR ADDITIONAL COMPENSATION TO THE CONTRACTOR.

FIRE ALARM CONDUCTOR SCHEDULE

DESIG-NATION	CONDUCTOR	DEVICE TYPE	COLOR CODE
A	2 NO. 14 'THHN' – STRANDED	INITIATION DEVICES	TWISTED PAIR
C	2 NO. 12 'THHN' – STRANDED	ADUIO/VISUAL DEVICES	RED/BLACK
E	2 NO. 14 'THHN' – STRANDED	AUXILLIARY RELAYS	BLUE/ORANGE
F	2 NO. 14 'THHN' – STRANDED	SUPERVISORY DEVICES	PURPLE/BROWN

FIRE ALARM SYSTEM SEQUENCE MATRIX

NOTIFICATION

TRANSMIT TROUBLE SIGNAL TO MONITORING STATION

TRANSMIT SUPERVISORY SIGNAL TO MONITORING STATION

TRANSMIT ALARM SIGNAL TO MONITORING STATION

ACTUATE OCCUPANT NOTIFICATION

SYSTEM ANNUNCIATION

COMMON TROUBLE ANNUNCIATION

SUPERVISORY ZONE ANNUNCIATION

ALARM ZONE ANNUNCIATION

FIRE SAFETY CONTROL

SHUT DOWN AIR HANDLER

RELEASE DOOR HOLDERS

RECALL ELEVATOR TO DESIGNATED FLOOR

SHUNT TRIP ELEVATOR POWER

UNLOCK ACCESS CONTROLLED LOCK (IF PROVIDED FOR)

	SYSTEM INPUTS	A	B	C	D	E	F	G	H	I	J	K	L	
1	MANUAL PULL STATIONS	X			X	X			X	X			X	1
2	SMOKE/HEAT DETECTORS	X			X	X			X	X			X	2
3	DUCT DETECTORS		X				X		X					3
4	SPRINKLER FLOW	X			X	X			X	X			X	4
5	SPRINKLER TAMPER		X				X							5
6	SYSTEM TROUBLE			X				X						6
7	NOT USED													7
8														8
		A	B	C	D	E	F	G	H	I	J	K	L	

GENERAL NOTES:

* ALL FIRE ALARM SYSTEM DEVICES TO BE ADDRESSABLE.

FIRE ALARM GENERAL NOTES:

1. THE CONTRACTOR SHALL SUBMIT SHOP DRAWINGS OF THE PROPOSED ADDRESSABLE FIRE ALARM SYSTEM, INCLUDING ALL DEVICES AND WIRING LAYOUTS, BATTERY CALCULATIONS AND FREQUENCY OF OPERATION TO THE FIRE MARSHAL FOR APPROVAL PRIOR TO SUBMITTING TO ENGINEER FOR REVIEW. ANY REVISIONS AND/OR ADDITIONS REQUIRED BY THE LOCAL JURISDICTION PRIOR TO OBTAINING CERTIFICATE OF OCCUPANCY ARE THE RESPONSIBILITY OF THE CONTRACTOR AND WILL NOT BE REASON FOR ADDITIONAL COMPENSATION TO THE CONTRACTOR.
2. THE FIRE ALARM SYSTEM SHALL BE INSTALL IN COMPLIANCE WITH NFPA 70, 72, FLORIDA BUILDING CODE, AND LOCAL ORDINANCE.
3. SYSTEM SUPPLIER SHALL SUPERVISE INSTALLATION, PROGRAM AND TEST SYSTEM, AND INSTRUCT OWNER.
4. ALL CONTROL CABINETS SHALL BE GROUNDED PER NEC AND MANUFACTURER SPECIFICATION.
5. SYSTEM INSPECTION, TEST RESULT, AND OPERATION SHEETS SHALL BE PROVIDED TO THE OWNER.
6. REFER TO FIRE ALARM DRAWINGS FOR ADDITIONAL REQUIREMENTS.
7. THE ELECTRICAL CONTRACTOR SHALL PROVIDE AS-BUILT DRAWINGS SHOWING EXACT FIELD INSTALLATION TO THE OWNER AFTER COMPLETION OF THE PROJECT.
8. ALL FIELD CHANGES SHALL BE COORDINATED WITH OWNER'S REPRESENTATIVE.
9. FIRE ALARM SYSTEM SHALL BE ENERGIZED UNDER THE SUPERVISION OF THE MANUFACTURER.
10. SMOKE DETECTORS SHALL BE INSTALLED MINIMUM 3'-0" FROM HVAC SUPPLY AIR DIFFUSERS.
11. VERIFY LOCATION OF THE FIRE ALARM CONTROL PANEL WITH THE LOCAL AUTHORITY HAVING JURISDICTION.
12. PROVIDE INTERLOCKS TO THE BUILDING FIRE ALARM SYSTEM TO PROVIDE AUTOMATIC SIGNALING TO AN APPROVED LOCATION WITH ADEQUATE DIALING AND COMMUNICATION SYSTEM CAPABILITY. COORDINATE FINAL REQUIREMENTS WITH OWNER AND GENERAL CONTRACTOR.
13. ALL JUNCTION BOXES AND COVER PLATES TO EMERGENCY SYSTEM SHALL BE PAINTED RED FOR QUICK RECOGNITION.
14. ALL CONTROL AND ALARM CABLES SHALL BE INSTALLED IN CONDUIT.
15. CONTRACTOR SHALL VERIFY THAT THE QUANTITY AND LOCATIONS SHOWN ON THE DRAWINGS SHALL PROVIDE A COMPLETE AND FUNCTIONAL SYSTEM TO THE OWNER.
16. CONTRACTOR SHALL COORDINATE LOCATIONS AND QUANTITIES OF ALL SPRINKLER TAMPER AND FLOW SWITCHES WITH SPRINKLER CONTRACTOR AND PROVIDE DEVICES AND WIRING AS REQUIRED.
17. WALL-MOUNTED AUDIBLE, VISUAL, AND AUDIBLE-VISUAL APPLIANCES SHALL HAVE THE BOTTOM OF THE FACE PLATE AT 80"-AFF, OR 6"-FROM THE TOP OF FACE PLATE TO CEILING, WHICHEVER IS LOWER.
18. WHEN CEILING MOUNTED, SMOKE AND/OR HEAT DETECTORS SHALL BE MOUNTED NO CLOSER THAT 4" TO A SIDE WALL.
19. CONTROL RELAYS MUST BE MOUNTED WITHIN 3'-0" OF THE EMERGENCY CONTROL DEVICE.
20. WIRING ENTERING OR LEAVING A BUILDING, AND 120VAC CONTROL PANEL CIRCUITS SHALL HAVE SURGE PROTECTION INSTALLED IN ACCORDANCE WITH NFPA 72 1-5, 5.3 AND NEC. ARTICLE 800-1, 800-13, 800-30(A), AND 800-33. MIN. 6X6X6 J-BOX.
21. ALL DEVICES SUCH AS FIRE ALARM PULLS, STROBES AND HORNS, ETC ARE TO BE RED IN COLOR.
22. PROGRAM DACT AND ESTABLISH PROPER REPORTING TO THE MONITORING SYSTEM.
23. CONTRACTOR SHALL INCLUDE MINIMUM (4) HOURS IN HIS BID PROPOSAL FOR OWNER'S TRAINING. THE TRAINING TO BE PERFORMED AFTER COMPLETION OF FIRE ALARM SYSTEM.

CENTRAL STATION ,TRANSMISSION OF SIGNALS & MONITORING NOTE:

- ALL SIGNALS (ALARM/ TROUBLE/SUPERVISORY) WILL BE TRANSMITTED TO THE CENTRAL STATION/911 (SYSTEM WILL REPORT AS CONTACT ID).
- THE MEANS OF TRANSMISSION ARE PHONE LINES OR INTERNET VIA IP ADDRESS.
- ALL SIGNALS WILL BE TRANSMITTED AS A POINT ADDRESSABLE SIGNAL TRANSMITTED TO THE CENTRAL STATION RECEIVER, SYSTEMS POINTS WILL BE IDENTIFIED AT THE CENTRAL STATION AS FOLLOWS: DEVICE TYPE (PULL STATION, SMOKE, ETC) + DEVICE LOCATION (FLOOR + GENERAL DESCRIPTION) + INDIVIDUAL BUILDING PHYSICAL ADDRESS OR BUILDING NUMBER.
- THE FIRE ALARM DIALER IS AN OPTIONAL BOARD THAT MOUNTS INSIDE THE FIRE ALARM CABINET ON TOP OF THE FIRE ALARM MAIN BOARD.

FIRE ALARM RISER DIAGRAM

SCALE: N.T.S.

CITY OF TAMPA
CONTRACT ADMINISTRATION DEPARTMENT
PLANNING AND DESIGN DIVISION
306 E. JACKSON STREET 4 NORTH
TAMPA, FLORIDA 33602
p: 813. 274. 8456 - f: 813. 274. 8080
url: www.tampagov.net

James E. Jackson, Jr. AIA, NOMA
City Architect
Edward D. Rice, AIA
Project Architect
Kevin L. Henika, AIA
Project Architect
Thomas A. Hester, Sr., AIA, NOMA
Project Architect
David R. Pagitt
Supervisor, Architectural Drafting
Kinsey C. Tillman
Drafting Technician
Jerry P. Sanders
Drafting Technician
Byron K. Thomas, LEED AP
Drafting Technician

MEP CONSULTANT
GRINER ENGINEERING, INC.
1628 1st. AVENUE NORTH
ST. PETERSBURG, FL 33713

STRUCTURAL CONSULTANT
BILLER REINHART STRUCTURAL GROUP, INC.
4014 GUNN HWY. SUITE 248
TAMPA, FL 33713

CIVIL CONSULTANT
B M CIVIL LLC
12315 WYCLIFF PLACE
TAMPA, FL 33626

LANDSCAPE CONSULTANT
DAVID CONNER & ASSOCIATES
1509 W. SWANN AVENUE,SUITE 255
TAMPA, FL 33606

FIRE STATION 23
20770 TROUT CREEK DR.
TAMPA, FL 33647

DPW FILE NUMBER

DPW NUMBER
17-C-00037

ISSUE DATE
07-28-2017

DRAWN BY

REVISIONS

SEAL

Jose A Rosario, P.E. FL. 74457

SCALE: N.T.S.

FIRE ALARM RISER DIAGRAM

GRINER
GRINER ENGINEERING, INC.
1628 First Avenue North
St. Petersburg, Florida 33713
Phone: (727)-822-2335
Fax: (727)-821-3361
Certificate of Authorization #3173

Date	06-15-2017
Drawn	HH
Designed	HH
EOR	JAR
Job no.	17049

SHEET NUMBER
E6.1
X OF X

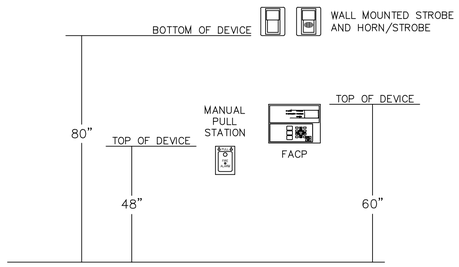

TYPICAL DEVICE MOUNTING HEIGHT
NOT TO SCALE

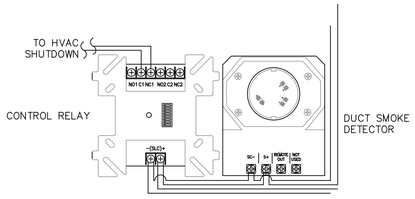

TYPICAL DUCT SMOKE DETECTOR WIRING DETAIL
NOT TO SCALE

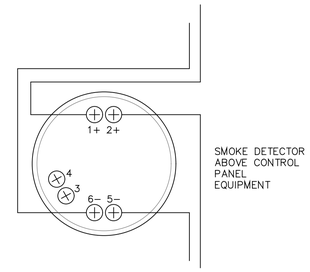

TYPICAL SMOKE DETECTOR WIRING DETAIL
NOT TO SCALE

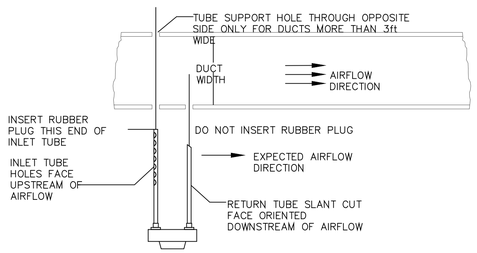

TYPICAL DUCT SMOKE DETECTOR INSTALLATION DETAIL
NOT TO SCALE

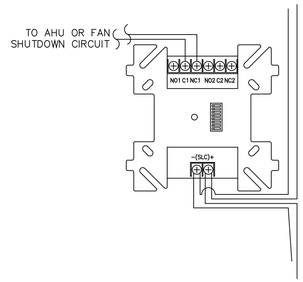

TYPICAL CONTROL RELAY WIRING DETAIL
NOT TO SCALE

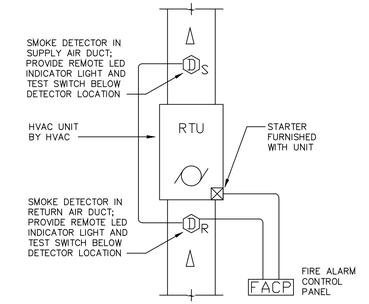

TYPICAL WIRING DIAGRAM - HVAC DUCT SMOKE DETECTOR
NOT TO SCALE

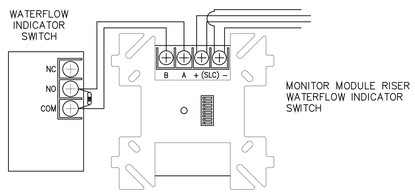

TYPICAL MONITOR MODULE WIRING DETAIL
NOT TO SCALE

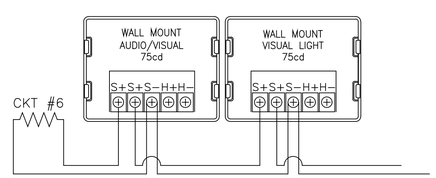

TYPICAL STROBE AND HORN/STROBE WIRING DETAIL
NOT TO SCALE

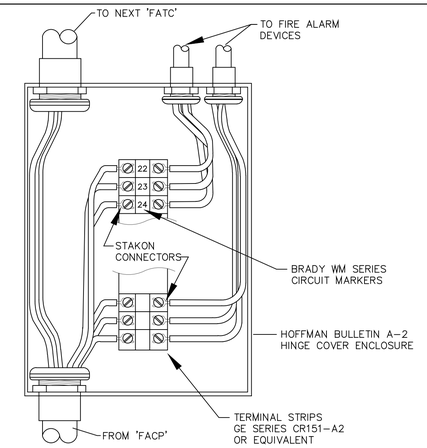

TYPICAL FIRE ALARM TERMINAL CABINET (FACT)
NOT TO SCALE

GENERAL FIRE ALARM DETAILS:
FIRE ALARM DETAILS ARE FOR REFERENCE ONLY. REFER TO MANUFACTURER INSTALLATION INSTRUCTION AND REQUIREMENTS FOR EXACT CONNECTIONS AND LAYOUTS.

FIRE ALARM DETAILS
SCALE: N.T.S.

GRINER ENGINEERING, INC.
1628 First Avenue North
St. Petersburg, Florida 33713
Phone: (727)-822-2335
Fax: (727)-821-3361
Certificate of Authorization #3173

Date	06-15-2017
Drawn	HH
Designed	HH
EOR	JAR
Job no.	17049

CITY OF TAMPA
CONTRACT ADMINISTRATION DEPARTMENT
PLANNING AND DESIGN DIVISION
306 E. JACKSON STREET 4 NORTH
TAMPA, FLORIDA 33602
p: 813. 274. 8456 – f: 813. 274. 8080
url: www.tampagov.net

James E. Jackson, Jr. AIA, NOMA
City Architect
Edward D. Rice, AIA
Project Architect
Kevin L. Henika, AIA
Project Architect
Thomas A. Hester, Sr., AIA, NOMA
Project Architect
David R. Pagitt
Supervisor, Architectural Drafting
Kinsey C. Tillman
Drafting Technician
Jerry P. Sanders
Drafting Technician
Byron K. Thomas, LEED AP
Drafting Technician

MEP CONSULTANT
GRINER ENGINEERING, INC.
1628 1st. AVENUE NORTH
ST. PETERSBURG, FL 33713

STRUCTURAL CONSULTANT
BILLER REINHART STRUCTURAL GROUP, INC.
4014 GUNN HWY. SUITE 248
TAMPA, FL 33713

CIVIL CONSULTANT
B M CIVIL LLC
12315 WYCLIFF PLACE
TAMPA, FL 33626

LANDSCAPE CONSULTANT
DAVID CONNER & ASSOCIATES
1509 W. SWANN AVENUE,SUITE 255
TAMPA, FL 33606

FIRE STATION 23
20770 TROUT CREEK DR.
TAMPA, FL 33647

DPW FILE NUMBER

DPW NUMBER
17–C–00037

ISSUE DATE
07–28–2017

DRAWN BY

REVISIONS

SEAL

Jose A Rosario, P.E. FL. 74457

SCALE: N.T.S.

FIRE ALARM DETAILS

SHEET NUMBER
E6.2
X OF X

HVAC SYMBOL LEGEND

SYMBOL	DESCRIPTION	SYMBOL	DESCRIPTION
18X12	EXISTING DUCTWORK TO REMAIN SIZE IN INCHES (PLAN DIM. FIRST)		ROUND DUCT DOWN
	EXISTING DUCTWORK/EQUIPMENT TO BE REMOVED		ROUND DUCT UP
18X12	NEW DUCTWORK SIZE IN INCHES (PLAN DIM. FIRST)		GOOSENECK
	NEW FLEXIBLE DUCT		ROOF MOUNTED EXHAUST FAN
	NEW DUCTSOX DUCTWORK		DRYWELL
	NESTED SQUARE/RECTANGULAR BRANCH TAKE OFF	AD AD	DUCT ACCESS DOOR
	SPIN-IN FITTING WITH VOLUME DAMPER	FSD	COMBINATION FIRE/SMOKE DAMPER (VERTICAL POSITION)
	SPIN-IN FITTING WITHOUT VOLUME DAMPER	FD	FIRE DAMPER (VERTICAL POSITION)
	DUCT TRANSITION (RECTANGLE TO RECTANGLE)	FD	FIRE DAMPER (HORIZONTAL POSITION)
	DUCT TRANSITION (RECTANGLE TO ROUND)	VD	MOTORIZED VOLUME DAMPER IN DUCTWORK
	DUCT TEE WITH TURNING VANES	VD	MANUAL VOLUME DAMPER IN DUCTWORK
	DUCT ELBOW UP	SD	DUCT MOUNTED SMOKE DETECTOR
	DUCT ELBOW DOWN		SIDEWALL RETURN GRILLE
	90° ELBOW WITH TURNING VANES		SIDEWALL SUPPLY GRILLE
W R	90° RADIUS ELBOW (R=1.5W)	FC	FLEXIBLE DUCT CONNECTOR
VD	45° BRANCH TAKE-OFF WITH VOLUME DAMPER	S.A. R.A. EXH.	CEILING DIFFUSER (SUPPLY, RETURN, & EXHAUST)
EDH-?	ELECTRIC DUCT HEATER	S.A. R.A. EXH.	EXISTING CEILING DIFFUSER (SUPPLY, RETURN, & EXHAUST)
UC ??	UNDER CUT DOOR (INCHES GIVEN)	AD-? ??? ?x?	AIR DEVICE IDENTIFICATION AIRFLOW NECK SIZE
	SUPPLY AIRFLOW DIRECTION		EXHAUST/RETURN AIRFLOW DIRECTION
	NEW CONNECTION TO EXISTING		KEYED NOTE
T	THERMOSTAT (MTD. 4'-0" AFF)	H	HUMIDISTAT
S	SENSOR (MTD. 4'-0" AFF)	C	HVAC EQUIPMENT CONTROL
HD	HEAT DETECTOR	SP	STATIC PRESSURE SENSOR
CO	CARBON MONOXIDE SENSOR	CO_2	CARBON DIOXIDE SENSOR

HVAC PIPING AND VALVES LEGEND

SYMBOL	DESCRIPTION	SYMBOL	DESCRIPTION
	ELBOW - TURNED UP		TRIPLE DUTY VALVE (SHUT-OFF, BALANCING & CHECK)
	ELBOW - TURNED DOWN		BALL VALVE
	PIPE RISER		AUTO CIRCUIT SETTER VALVE
	TEE - OUTLET UP		HORIZONTAL SWING CHECK VALVE
	TEE - OUTLET DOWN		Y-TYPE STRAINER WITH BLOW DOWN AND VALVE
	CAP		BASKET TYPE STRAINER
	UNION		
	CONCENTRIC INCREASER	A	COMPRESSED AIR PIPING
	ECCENTRIC REDUCER	CWR	CONDENSER WATER RETURN PIPING
	FLEXIBLE PIPE CONNECTOR	CWS	CONDENSER WATER SUPPLY PIPING
	THERMOMETER	CD	CONDENSATE PIPING
	PRESSURE GAGE	CHWR	CHILLED WATER RETURN PIPING
P/T	PRESSURE/TEMPERATURE PLUG	CHWS	CHILLED WATER SUPPLY PIPING
	AUTOMATIC AIR VENT	HWR	HOT WATER HEATING SYSTEM RETURN PIPING
	MANUAL AIR VENT	HWS	HOT WATER HEATING SYSTEM SUPPLY PIPING
	VENTURI FLOW MEASUREMENT DEVICE	G	FUEL GAS PIPING
	BUTTERFLY VALVE	RD	REFRIGERATION SYSTEM DISCHARGE PIPING
M	MOTORIZED CONTROL VALVE (BUTTERFLY VALVE)	RS	REFRIGERATION SYSTEM RETURN PIPING (SUCTION)
		RL	REFRIGERATION SYSTEM SUPPLY PIPING (LIQUID)

HVAC ABBREVIATIONS

ABBREVIATION	DESCRIPTION	ABBREVIATION	DESCRIPTION	ABBREVIATION	DESCRIPTION	ABBREVIATION	DESCRIPTION
ADA	AMERICAN WITH DISABILITIES ACT	EWB	ENTERING WET BULB TEMPERATURE	LRA	LOCKED ROTOR AMPS	SMACNA	SHEET METAL & AIR CONDITIONING CONTRACTORS NATIONAL ASSOCIATION
A.F.F.	ABOVE FINISHED FLOOR	EWT	ENTERING WATER TEMPERATURE	LWB	LEAVING WET BULB TEMPERATURE		
A.F.G.	ABOVE FINISHED GRADE	FBC	FLORIDA BUILDING CODE	LWT	LEAVING WATER TEMPERATURE	SP	STATIC PRESSURE
AFR	ABOVE FINISHED ROOF	FCU	FAN COIL UNIT	MBH	THOUSANDS OF BTU PER HOUR	SS	SANITARY SEWER STACK
AHU	AIR-HANDLING UNIT	FD	FIRE DAMPER	MC	MECHANICAL CONTRACTOR	TSP	TOTAL STATIC PRESSURE
ANSI	AMERICAN NATIONAL STANDARDS INSTITUTE	FD	FLOOR DRAIN	MCA	MINIMUM CIRCUIT AMPS	UBC	UNIFORM BUILDING CODE
AP	ACCESS PANEL	FLA	FULL LOAD AMPS	MOCP	MAXIMUM OVER CURRENT PROTECTION	UL	UNDERWRITERS LABORATORIES
ASHRAE	AMERICAN SOCIETY OF HEATING, REFRIGERATION, & AIR CONDITIONING ENGINEERS	F.P.C.	FIRE PROTECTION CONTRACTOR	NC	NORMALLY CLOSED	UMC	UNIFORM MECHANICAL CODE
		FPM	FEET PER MINUTE	NEC	NATIONAL ELECTRIC CODE	UON	UNLESS OTHERWISE NOTED
		FT	FEET	NFPA	NATIONAL FIRE PROTECTION ASSOCIATION	UPC	UNIFORM PLUMBING CODE
ASME	AMERICAN SOCIETY OF MECHANICAL ENGINEERS	GAL	GALLONS	NIC	NOT IN CONTRACT	V	VENT
		G.C.	GENERAL CONTRACTOR	NO	NORMALLY OPEN	V	VOLTS
ASPE	AMERICAN SOCIETY OF PLUMBING ENGINEERS	GPH	GALLONS PER HOUR	NTS	NOT TO SCALE	VAV	VARIABLE AIR VOLUME
		GPM	GALLONS PER MINUTE	OA	OUTSIDE AIR	VB	VACUUM BREAKER
BHP	BRAKE HORSE POWER	HP	HORSEPOWER	PC	PLUMBING CONTRACTOR	VFD	VARIABLE FREQUENCY DRIVE
BTU	BRITISH THERMAL UNIT	HR	HOUR	PSI	POUNDS PER SQUARE INCH	VIF	VERIFY IN FIELD
BTUH	BRITISH THERMAL UNITS PER HOUR	HSPF	HEATING SEASON PERFORMANCE FACTOR	PSIG	POUNDS PER SQUARE INCH-GAUGE	VRF	VARIABLE REFRIGERANT FLOW
CFM	CUBIC FEET PER MINUTE	HVAC	HEATING, VENTILATION, & AIR CONDITIONING	PTAC	PACKAGED TERMINAL AIR CONDITIONER	VRV	VARIABLE REFRIGERANT VOLUME
CO	CLEAN OUT			PVC	POLYVINYL CHLORIDE	VS	VENT STACK
COP	COEFFICIENT OF PERFORMANCE	Hz	HERTZ	RA	RETURN AIR	VTR	VENT THROUGH ROOF
CPVC	CHLORINATED POLYVINYL CHLORIDE	IBC	INTERNATIONAL BUILDING CODE	RD	ROOF DRAIN		
CU	CONDENSING UNIT	IECC	INTERNATIONAL ENERGY CONSERVATION CODE	RLA	RATED LOAD AMPS	%RH	PERCENT RELATIVE HUMIDITY
DDC	DIRECT DIGITAL CONTROLS			RO	ROOF OVERFLOW	ΔP	CHANGE IN PRESSURE
DIA.	DIAMETER	IMC	INTERNATIONAL MECHANICAL CODE	RPBFP	REDUCED PRESSURE BACKFLOW PREVENTER	ΔT	CHANGE IN TEMPERATURE
EAT	ENTERING AIR TEMPERATURE	IPC	INTERNATIONAL PLUMBING CODE			°C	DEGREES CELCIUS
EC	ELECTRICAL CONTRACTOR	IPLV	INTEGRATED PART-LOAD VALUE	RPM	REVOLUTIONS PER MINUTE	°F	DEGREES FAHRENHEIT
EDB	ENTERING DRY BULB TEMPERATURE	KW	KILOWATTS	RTU	ROOF TOP UNIT	°K	DEGREES KELVIN
EER	ENERGY EFFICIENCY RATIO	LAT	LEAVING AIR TEMPERATURE	SA	SUPPLY AIR	°R	DEGREES RANKIN
ESP	EXTERNAL STATIC PRESSURE	LB	POUNDS FORCE	SC	SITE CONTRACTOR	"WC	INCHES WATER COLUMN
ETR	EXISTING TO REMAIN	LDB	LEAVING DRY BULB TEMPERATURE	SEER	SEASONAL ENERGY EFFICIENCY RATIO	ø	DIAMETER
EUH	ELECTRIC UNIT HEATER	LEED	LEADERSHIP IN ENERGY & ENVIRONMENTAL DESIGN			ϕ	ELECTRICAL PHASE

HVAC GENERAL NOTES

1. ALL WORK SHALL CONFORM TO THE REQUIREMENTS OF THE FLORIDA BUILDING CODE - MECHANICAL WITH REVISIONS, NATIONAL ELECTRIC CODE, NFPA AND ALL LOCAL ORDINANCES.

2. ALL WORK SHALL BE COORDINATED WITH ARCHITECTURAL, CIVIL, STRUCTURAL AND ELECTRICAL DRAWINGS.

3. REFER TO ARCHITECTURAL PLANS FOR EXACT CEILING GRID AND DIFFUSER LOCATIONS.

4. PRIOR TO SUBMITTING A BID, THE CONTRACTOR SHALL HAVE STUDIED AND COMPARED THE CONTRACT DOCUMENTS WITH EXISTING/PROPOSED CONDITIONS AND NOT LATER THAN TEN (10) DAYS PRIOR TO THE BID OPENING SHALL REPORT TO THE ENGINEER ANY ERROR, INCONSISTENCY, OR OMISSION IN THE CONTRACT DOCUMENTS.

5. ALL DUCTWORK SHALL BE SEALED WITH A NON-HARDENING, NON-MIGRATING MASTIC OR LIQUID ELASTIC SEALANT. PROVIDE HOT-DIPPED GALVANIZED STEEL FASTENERS, ANCHORS, RODS, STRAPS, TRIM AND ANGLES FOR SUPPORT OF DUCTWORK.

6. FABRICATE DUCT FITTINGS TO MATCH ADJOINING DUCTS AND TO COMPLY WITH DUCT REQUIREMENTS AS APPLICABLE TO FITTINGS. LIMIT ANGULAR TAPERS TO 30 DEGREES FOR CONTRACTING TAPERS AND 20 DEGREES FOR EXPANDING TAPERS.

7. PROVIDE FLEXIBLE CONNECTION FROM EACH DUCTWORK CONNECTION AIR MOVING EQUIPMENT.

8. ALL DUCTS SHOWN ARE INSIDE CLEAR DIMENSIONS.

9. PROVIDE ACCESS PANELS IN CEILINGS FOR ACCESS TO VOLUME DAMPERS, FIRE DAMPERS, DUCT MOUNTED SMOKE DETECTORS, AND WHERE REQUIRED FOR MAINTENANCE OF ALL FANS AND MECHANICAL EQUIPMENT. PANELS SHALL HAVE A FIRE RATING EQUAL TO THE PENETRATED ASSEMBLY (MINIMUM 1 HOUR). PROVIDE FIRE DAMPERS AT ALL DUCT PENETRATIONS OF FIREWALLS.

10. INSULATE OUTSIDE AIR, SUPPLY, AND RETURN DUCTWORK WITH INSULATION, WHICH HAS A MINIMUM R-VALUE OF 6. ALL DUCTWORK INSULATION, FITTINGS, COVERS AND FINISHES SHALL HAVE A MAXIMUM FLAME SPREAD RATING OF 25 AND A MAXIMUM SMOKE DEVELOPED RATING OF 50 AND ALL BE IN COMPLIANCE WITH NFPA 90A.

11. LOCATE ALL THERMOSTATS 48" AFF UNLESS OTHERWISE NOTED. EXACT LOCATION OF ALL THERMOSTATS SHALL BE APPROVED BY THE ARCHITECT AND THE ENGINEER.

12. CONTRACTOR SHALL CLEAN ALL COILS AND REPLACE ALL FILTERS AND BELTS AT SUBSTANTIAL COMPLETION.

13. AIR CONDITIONING EQUIPMENT SHALL BE AS SPECIFIED. ARCHITECT AND ENGINEER WILL REVIEW ANY SUBSTITUTION FOR COMPATIBILITY.

14. DUCT SIZES AND EQUIPMENT OPENINGS THRU ROOFS, SLABS AND WALL PARTITIONS SHALL SUIT EQUIPMENT FURNISHED. SEE SHOP DRAWINGS FOR EQUIPMENT DIMENSIONS.

15. PROVIDE "P" TRAP AT AIR HANDLER UNITS.

16. SLEEVE AND SEAL ALL PIPING PASSING THROUGH WALLS, FLOORS AND ROOF UNLESS NOTED OTHERWISE.

17. ALL CUTTING, PATCHING AND REPAIR WORK SHALL BE THE RESPONSIBILITY OF THE TRADE INVOLVED.

18. A COPY OF THE FINAL TEST AND BALANCE REPORT, REVIEWED AND ACCEPTED BY THE ENGINEER OF RECORD SHALL BE MADE AVAILABLE AT THE FINAL CONSTRUCTION SURVEY. NO FINAL INSPECTION OF HVAC CONSTRUCTION BY THE ENGINEER OF RECORD WILL BE CONDUCTED PRIOR TO RECEIPT AND ACCEPTANCE OF A FINAL TEST AND BALANCE REPORT.

19. THE MAXIMUM ALLOWABLE LEAKAGE FOR THE DUCTWORK IS 2 %

20. THE CONTRACTOR SHALL PROVIDE SHOP DRAWINGS AND SUBMITTALS FOR HVAC EQUIPMENT AND DUCTWORK SHOWN ON THE PLANS AND SPECIFICATIONS FOR THE ENGINEERS APPROVAL. THE ENGINEER MAY REQUIRE THE CONTRACTOR TO REDO ANY WORK, WHICH WAS NOT APPROVED, OR THE ENGINEER MAY REQUIRE A CREDIT TO THE OWNER. PROVIDE A SET OF AS BUILTS AFTER THE JOB IS COMPLETED. THIS SET SHALL BE CONTINUOUSLY UPDATED DURING CONSTRUCTION.

21. PROVIDE AIR TURNING VANES AT ALL 90-DEGREE ELBOWS. PROVIDE VOLUME DAMPERS AT EACH BRANCH TAKEOFF AS INDICATED IN THE SMACNA "HVAC DUCT CONSTRUCTION STANDARDS".

22. PROVIDE FILTER RACKS WHICH ARE ACCESSIBLE FOR MAINTENANCE AND SEALED AIR TIGHT.

23. CONTRACTOR SHALL INSTALL HVAC SYSTEMS AS REQUIRED BY THE MANUFACTURER AND ENGINEER TO INSURE QUIET OPERATION. NO UNDUE VIBRATION OR SOUND SHALL BE TRANSMITTED TO BUILDING STRUCTURE AND OCCUPIED AREAS. IF THE EQUIPMENT INSTALLED HAS A HIGHER SOUND PRESSURE LEVEL THAN THE EQUIPMENT SPECIFIED, THEN IT WILL BE THE CONTRACTORS AND THE MANUFACTURES RESPONSIBILITY TO ELIMINATE ANY ADDITIONAL NOISE TRANSMISSION.

MECHANICAL DRAWING INDEX

SHEET	DESCRIPTION
M-1.0	MECHANICAL COVER SHEET
M-2.0	OVERALL MECHANICAL PLAN
M-3.0	MECHANICAL ROOF PLAN
M-4.1	ENLARGED MECHANICAL PLAN - PART 1
M-4.2	ENLARGED MECHANICAL PLAN - PART 2
M-5.0	MECHANICAL SCHEDULES
M-5.1	MECHANICAL SCHEDULES
M-6.0	MECHANICAL DETAILS
M-6.1	MECHANICAL DETAILS
M-6.2	MECHANICAL DETAILS
M-6.3	MECHANICAL DETAILS
M-6.4	MECHANICAL DETAILS
M-7.0	MECHANICAL SPECIFICATIONS
M-7.1	MECHANICAL SPECIFICATIONS
M-7.2	MECHANICAL SPECIFICATIONS
M-7.3	MECHANICAL SPECIFICATIONS

NOTE:
SOME SYMBOLS AND ABBREVIATIONS SHOWN MAY NOT PERTAIN TO THIS PROJECT.

CITY OF TAMPA
CONTRACT ADMINISTRATION DEPARTMENT
PLANNING AND DESIGN DIVISION
306 E. JACKSON STREET 4 NORTH
TAMPA, FLORIDA 33602
p: 813. 274. 8456 - f: 813. 274. 8080
url: www.tampagov.net

James E. Jackson, Jr. AIA, NOMA
City Architect
Edward D. Rice, AIA
Project Architect
Kevin L. Henika, AIA
Project Architect
Thomas A. Hester, Sr., AIA, NOMA
Project Architect
David R. Pagitt
Supervisor, Architectural Drafting
Kinsey C. Tillman
Drafting Technician
Jerry P. Sanders
Drafting Technician
Byron K. Thomas, LEED AP
Drafting Technician

MEP CONSULTANT
GRINER ENGINEERING, INC.
1628 1st. AVENUE NORTH
ST. PETERSBURG, FL 33713

STRUCTURAL CONSULTANT
BILLER REINHART STRUCTURAL GROUP, INC.
4014 GUNN HWY. SUITE 248
TAMPA, FL 33713

CIVIL CONSULTANT
B M CIVIL LLC
12315 WYCLIFF PLACE
TAMPA, FL 33626

LANDSCAPE CONSULTANT
DAVID CONNER & ASSOCIATES
1509 W. SWANN AVENUE,SUITE 255
TAMPA, FL 33606

FIRE STATION 23
20770 TROUT CREEK DR.
TAMPA, FL 33647

DPW FILE NUMBER

DPW NUMBER
17-C-00037

ISSUE DATE
07-28-2017

DRAWN BY

REVISIONS

SEAL

Joseph H. Griner III, P.E. FL. 39491

SCALE: N.T.S

MECHANICAL COVER SHEET

SHEET NUMBER
M-1.0
X OF X

GRINER
GRINER ENGINEERING, INC.
1628 First Avenue North
St. Petersburg, Florida 33713
Phone: (727)-822-2335
Fax: (727)-821-3361
Certificate of Authorization #3173

Date	06-15-2017
Drawn	JL
Designed	JL
EOR	JHG
Job no.	17049

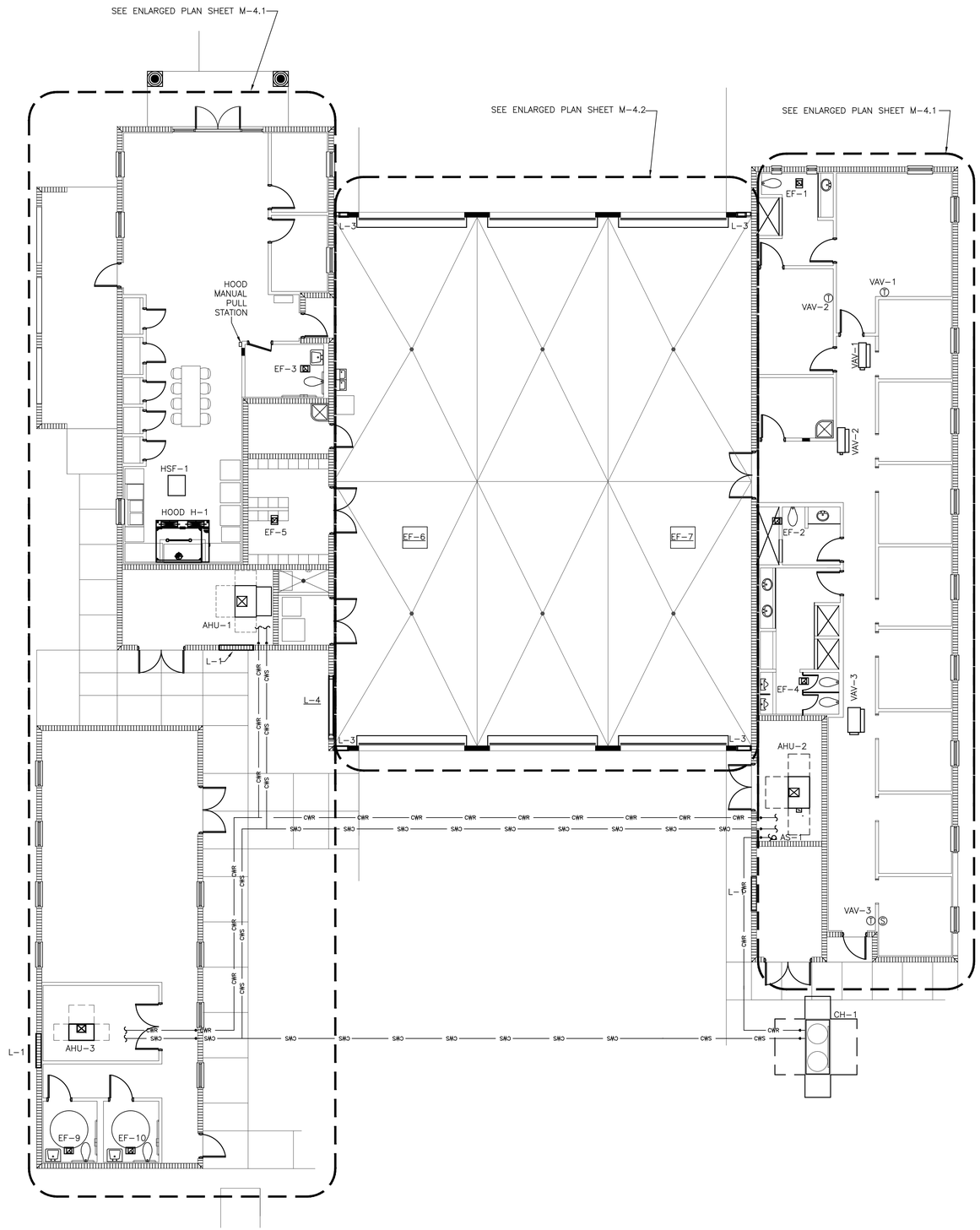

N

MECHANICAL FLOOR PLAN

SCALE: 1/8" = 1'-0"

CITY OF TAMPA
CONTRACT ADMINISTRATION
DEPARTMENT
PLANNING AND DESIGN DIVISION

306 E. JACKSON STREET 4 NORTH
TAMPA, FLORIDA 33602
p: 813. 274. 8456 - f: 813. 274. 8080
url: www.tampagov.net

James E. Jackson, Jr. AIA, NOMA
City Architect
Edward D. Rice, AIA
Project Architect
Kevin L. Henika, AIA
Project Architect
Thomas A. Hester, Sr., AIA, NOMA
Project Architect
David R. Pagitt
Supervisor, Architectural Drafting
Kinsey C. Tillman
Drafting Technician
Jerry P. Sanders
Drafting Technician
Byron K. Thomas, LEED AP
Drafting Technician

MEP CONSULTANT
GRINER ENGINEERING, INC.
1628 1st. AVENUE NORTH
ST. PETERSBURG, FL 33713

STRUCTURAL CONSULTANT
BILLER REINHART
STRUCTURAL GROUP, INC.
4014 GUNN HWY. SUITE 248
TAMPA, FL 33713

CIVIL CONSULTANT
B M CIVIL LLC
12315 WYCLIFF PLACE
TAMPA, FL 33626

LANDSCAPE CONSULTANT
DAVID CONNER & ASSOCIATES
1509 W. SWANN AVENUE,SUITE 255
TAMPA, FL 33606

FIRE STATION 23
20770 TROUT CREEK DR.
TAMPA, FL 33647

DPW FILE NUMBER

DPW NUMBER
17-C-00037

ISSUE DATE
07-28-2017

DRAWN BY

REVISIONS

SEAL

Joseph H. Griner III, P.E. FL. 39491

SCALE: 1/8" = 1'-0"

OVERALL MECHANICAL PLAN

GRINER
GRINER ENGINEERING, INC.
1628 First Avenue North
St. Petersburg, Florida 33713
Phone: (727)-822-2335
Fax: (727)-821-3361
Certificate of Authorization #3173

Date	06-15-2017
Drawn	JL
Designed	JL
EOR	JHG
Job no.	17049

SHEET NUMBER
M-2.0
X OF X

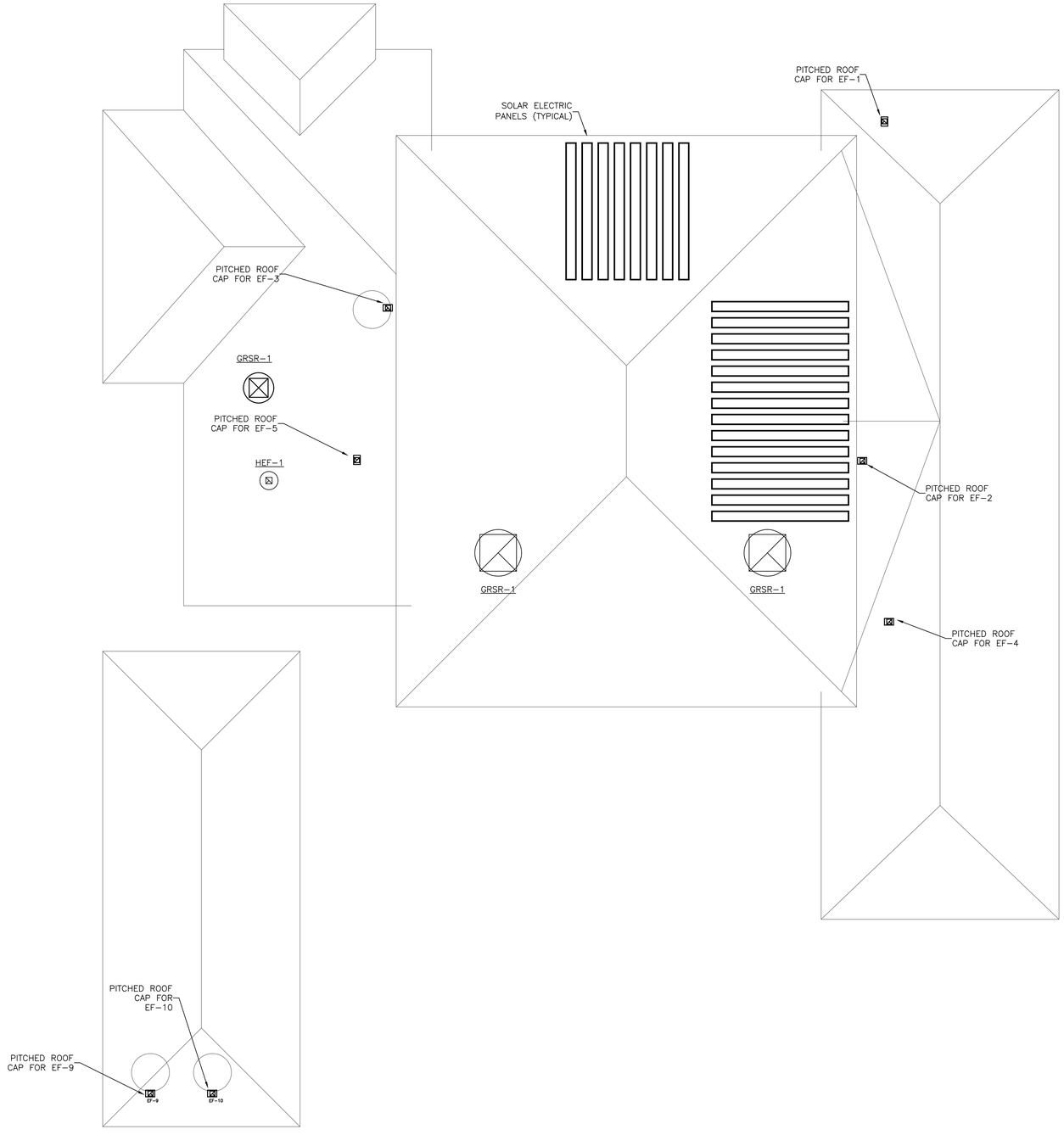

N

MECHANICAL ROOF PLAN
SCALE: 1/8" = 1'-0"

CITY OF TAMPA
CONTRACT ADMINISTRATION DEPARTMENT
PLANNING AND DESIGN DIVISION
306 E. JACKSON STREET 4 NORTH
TAMPA, FLORIDA 33602
p: 813. 274. 8456 - f: 813. 274. 8080
url: www.tampagov.net

James E. Jackson, Jr. AIA, NOMA
City Architect
Edward D. Rice, AIA
Project Architect
Kevin L. Henika, AIA
Project Architect
Thomas A. Hester, Sr., AIA, NOMA
Project Architect
David R. Pagitt
Supervisor, Architectural Drafting
Kinsey C. Tillman
Drafting Technician
Jerry P. Sanders
Drafting Technician
Byron K. Thomas, LEED AP
Drafting Technician

MEP CONSULTANT
GRINER ENGINEERING, INC.
1628 1st. AVENUE NORTH
ST. PETERSBURG, FL 33713

STRUCTURAL CONSULTANT
BILLER REINHART STRUCTURAL GROUP, INC.
4014 GUNN HWY. SUITE 248
TAMPA, FL 33713

CIVIL CONSULTANT
B M CIVIL LLC
12315 WYCLIFF PLACE
TAMPA, FL 33626

LANDSCAPE CONSULTANT
DAVID CONNER & ASSOCIATES
1509 W. SWANN AVENUE,SUITE 255
TAMPA, FL 33606

FIRE STATION 23
20770 TROUT CREEK DR.
TAMPA, FL 33647

DPW FILE NUMBER

DPW NUMBER
17-C-00037

ISSUE DATE
07-28-2017

DRAWN BY

REVISIONS

SEAL

Joseph H. Griner III, P.E. FL. 39491

SCALE: 1/8" = 1'-0"

MECHANICAL ROOF PLAN

SHEET NUMBER
M-3.0
X OF X

GRINER
GRINER ENGINEERING, INC.
1628 First Avenue North
St. Petersburg, Florida 33713
Phone: (727)-822-2335
Fax: (727)-821-3361
Certificate of Authorization #3173

Date	06-15-2017
Drawn	JL
Designed	JL
EOR	JHG
Job no.	17049

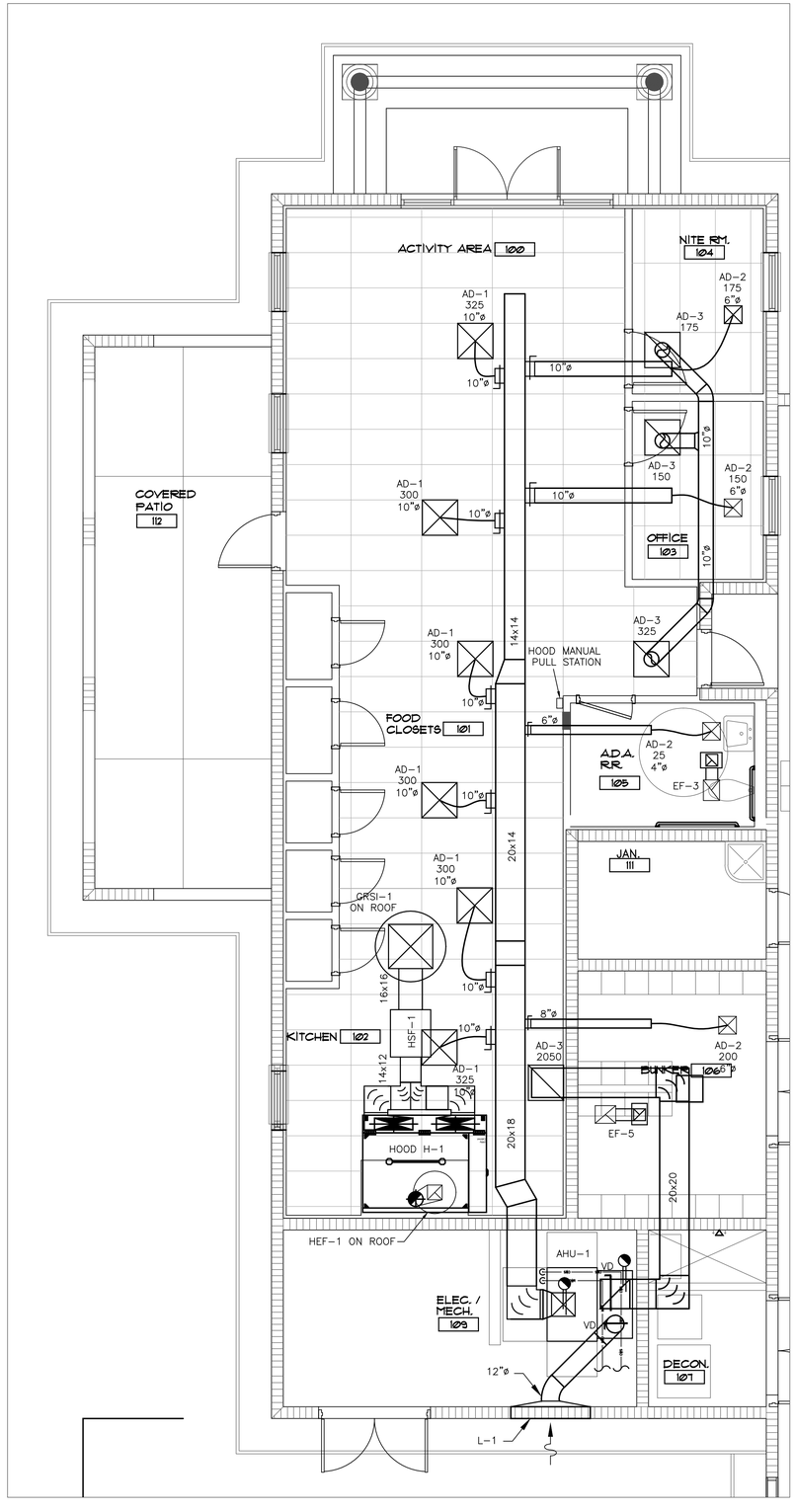

ENLARGED MECHANICAL PLAN– ACTIVITY
SCALE: 1/4" = 1'–0"

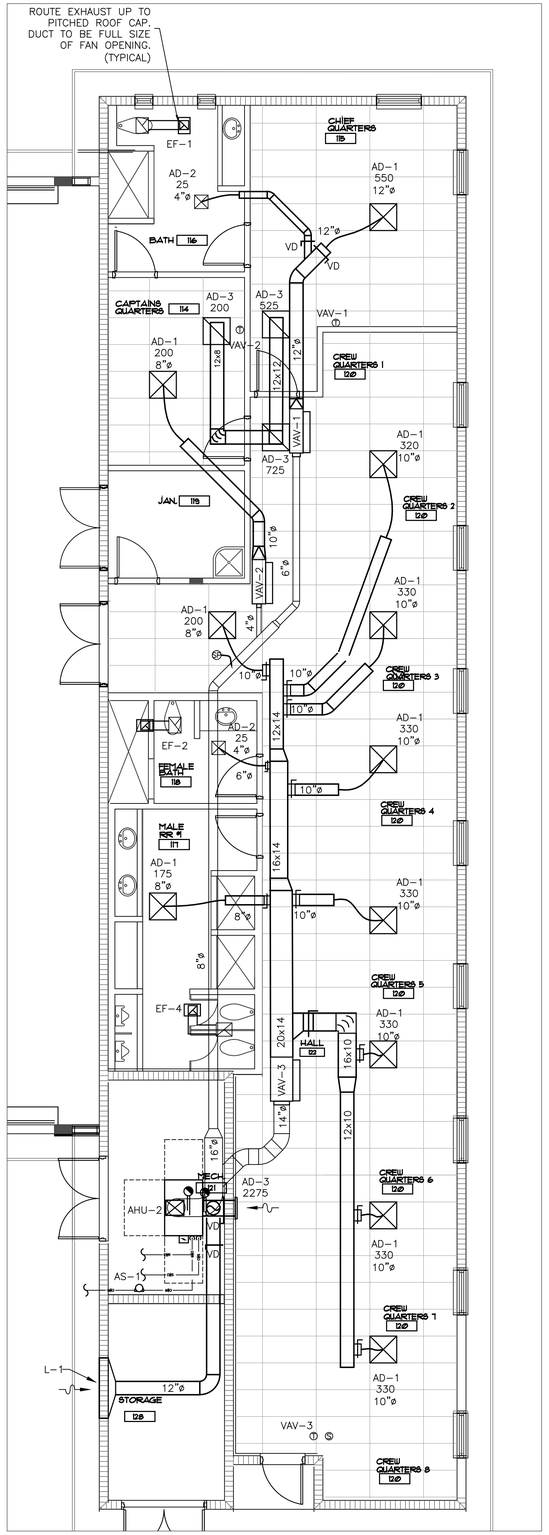

ENLARGED MECHANICAL PLAN– SLEEPING QUARTERS
SCALE: 1/4" = 1'–0"

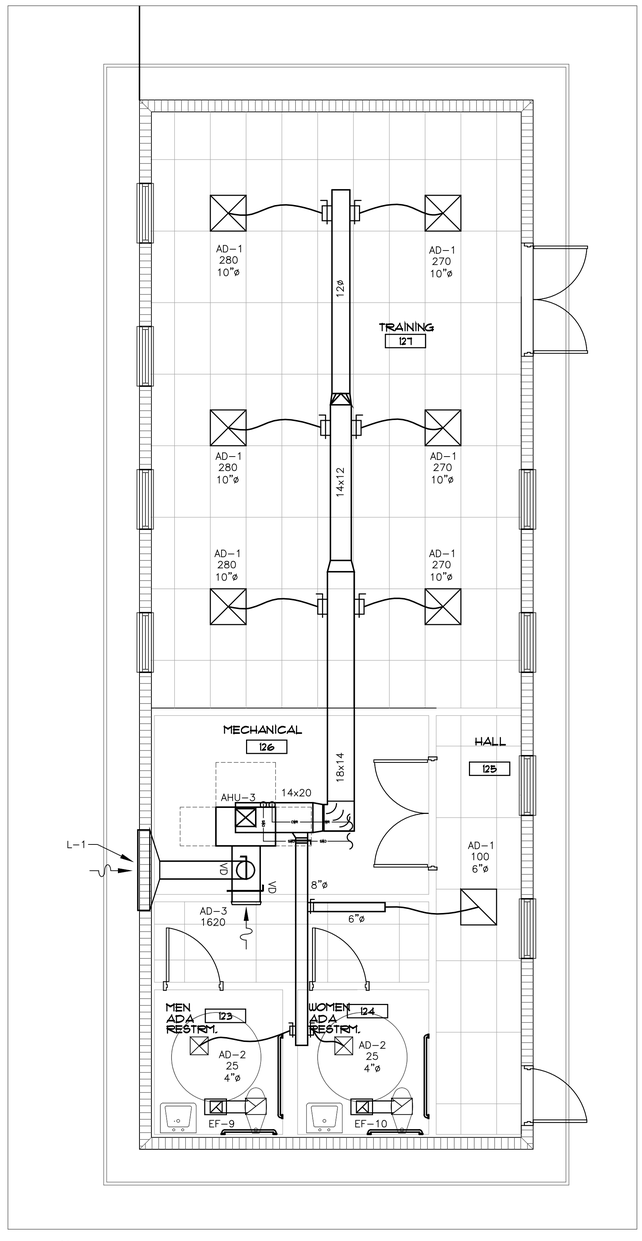

ENLARGED MECHANICAL PLAN– TRAINING
SCALE: 1/4" = 1'–0"

CITY OF TAMPA
CONTRACT ADMINISTRATION DEPARTMENT
PLANNING AND DESIGN DIVISION
306 E. JACKSON STREET 4 NORTH
TAMPA, FLORIDA 33602
p: 813. 274. 8456 – f: 813. 274. 8080
url: www.tampagov.net

James E. Jackson, Jr. AIA, NOMA
City Architect
Edward D. Rice, AIA
Project Architect
Kevin L. Henika, AIA
Project Architect
Thomas A. Hester, Sr., AIA, NOMA
Project Architect
David R. Pagitt
Supervisor, Architectural Drafting
Kinsey C. Tillman
Drafting Technician
Jerry P. Sanders
Drafting Technician
Byron K. Thomas, LEED AP
Drafting Technician

MEP CONSULTANT
GRINER ENGINEERING, INC.
1628 1st. AVENUE NORTH
ST. PETERSBURG, FL 33713

STRUCTURAL CONSULTANT
BILLER REINHART STRUCTURAL GROUP, INC.
4014 GUNN HWY. SUITE 248
TAMPA, FL 33713

CIVIL CONSULTANT
5 M CIVIL LLC
12315 WYCLIFF PLACE
TAMPA, FL 33626

LANDSCAPE CONSULTANT
DAVID CONNER & ASSOCIATES
1509 W. SWANN AVENUE,SUITE 255
TAMPA, FL 33606

FIRE STATION 23
20770 TROUT CREEK DR.
TAMPA, FL 33647

DPW FILE NUMBER

DPW NUMBER
17–C–00037

ISSUE DATE
07–28–2017

DRAWN BY

REVISIONS

SEAL

Joseph H. Griner III, P.E. FL. 39491

SCALE: 1/4" = 1'–0"

ENLARGED MECHANICAL PLAN – PART 1

SHEET NUMBER
M–4.1
X OF X

GRINER
GRINER ENGINEERING, INC.
1628 First Avenue North
St. Petersburg, Florida 33713
Phone: (727)-822-2335
Fax: (727)-821-3361
Certificate of Authorization #3173

Date	06-15-2017
Drawn	JL
Designed	JL
EOR	JHG
Job no.	17049

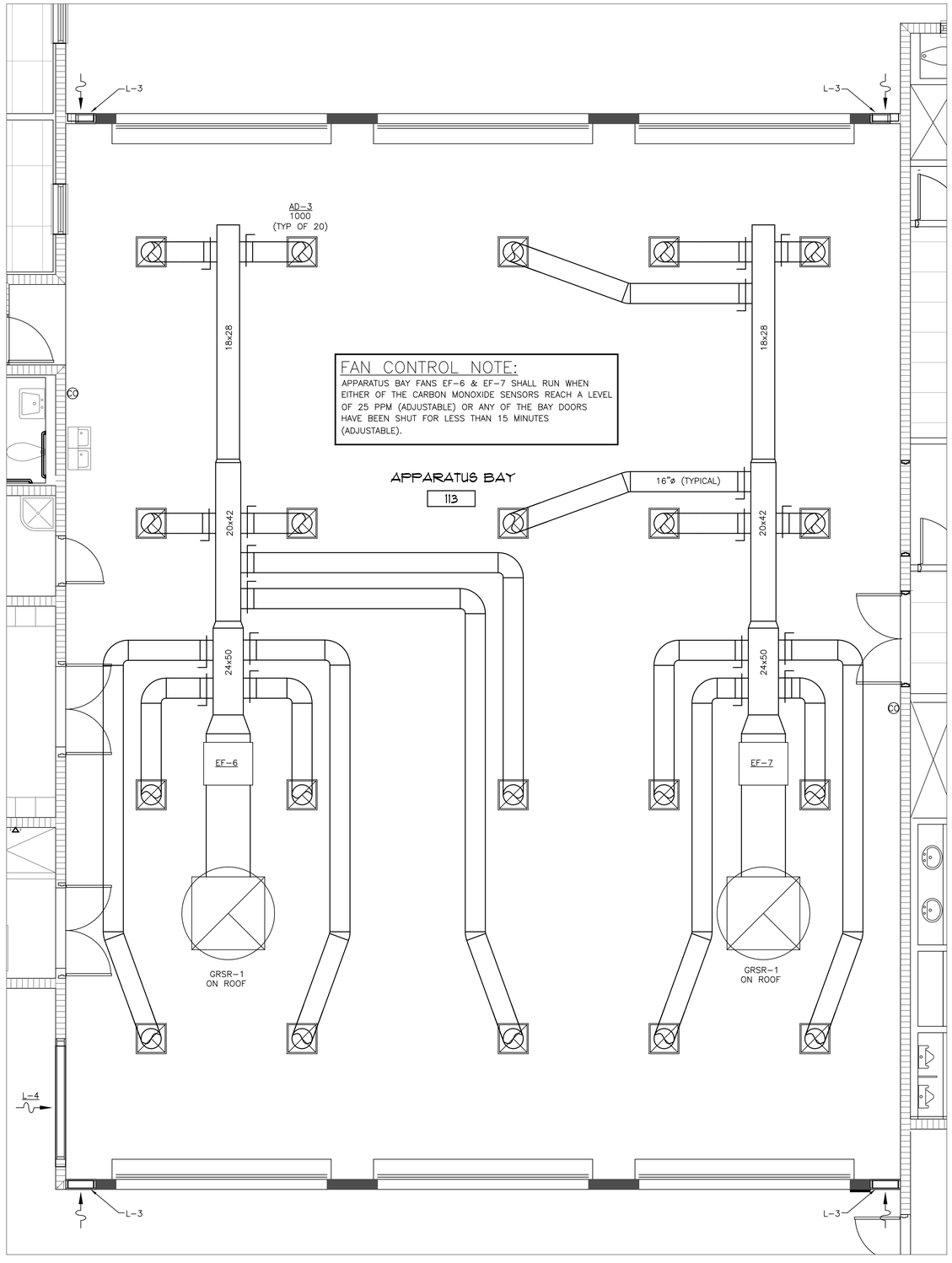

N

ENLARGED MECHANICAL PLAN– APARATUS BAY

SCALE: 1/4" = 1'-0"

CITY OF TAMPA
CONTRACT ADMINISTRATION DEPARTMENT
PLANNING AND DESIGN DIVISION

306 E. JACKSON STREET 4 NORTH
TAMPA, FLORIDA 33602
p: 813. 274. 8456 – f: 813. 274. 8080
url: www.tampagov.net

James E. Jackson, Jr. AIA, NOMA
City Architect
Edward D. Rice, AIA
Project Architect
Kevin L. Henika, AIA
Project Architect
Thomas A. Hester, Sr., AIA, NOMA
Project Architect
David R. Pagitt
Supervisor, Architectural Drafting
Kinsey C. Tillman
Drafting Technician
Jerry P. Sanders
Drafting Technician
Byron K. Thomas, LEED AP
Drafting Technician

MEP CONSULTANT
GRINER ENGINEERING, INC.
1628 1st. AVENUE NORTH
ST. PETERSBURG, FL 33713

STRUCTURAL CONSULTANT
BILLER REINHART STRUCTURAL GROUP, INC.
4014 GUNN HWY. SUITE 248
TAMPA, FL 33713

CIVIL CONSULTANT
B M CIVIL LLC
12315 WYCLIFF PLACE
TAMPA, FL 33626

LANDSCAPE CONSULTANT
DAVID CONNER & ASSOCIATES
1509 W. SWANN AVENUE,SUITE 255
TAMPA, FL 33606

FIRE STATION 23
20770 TROUT CREEK DR.
TAMPA, FL 33647

DPW FILE NUMBER

DPW NUMBER
17-C-00037

ISSUE DATE
07-28-2017

DRAWN BY

REVISIONS

SEAL

Joseph H. Griner III, P.E. FL. 39491

SCALE: 1/4" = 1'-0"

ENLARGED MECHANICAL PLAN – PART 2

SHEET NUMBER
M-4.2
X OF X

GRINER
GRINER ENGINEERING, INC.
1628 First Avenue North
St. Petersburg, Florida 33713
Phone: (727)-822-2335
Fax: (727)-821-3361
Certificate of Authorization #3173

Date	06-15-2017
Drawn	JL
Designed	JL
EOR	JHG
Job no.	17049

AIR DEVICE SCHEDULE

MARK	TYPE	MATERIAL	FINISH	MANUFACTURER	MODEL No.	NOTES
AD–1	CEILING SUPPLY, 24x24	ALUMINUM	WHITE	PRICE	ASCD	1, 2, 3, 4, 5
AD–2	CEILING SUPPLY, 12x12	ALUMINUM	WHITE	PRICE	ASCD	1, 2, 3, 4, 5
AD–3	LOUVERED EXHAUST/ RETURN, 24x24	ALUMINUM	WHITE	PRICE	630	1, 2, 3, 6

NOTES:

1. NOISE CRITERIA NOT TO EXCEED 25.
2. CONTRACTOR TO COORDINATE BORDER WITH CEILING TYPE (LAY–IN OR PLASTER).
3. REFER TO FLOOR PLAN FOR CFM.
4. AIR DEVICES ARE FOUR WAY THROW UNLESS NOTED OTHERWISE ON DRAWINGS.
5. AIR DEVICES ARE TO BE SUPPLIED WITH OPPOSED BLADE DAMPER.
6. PROVIDE INSULATED PLENUM BACK.

VARIABLE AIR VOLUME SCHEDULE

MARK	MAKE/MODEL	SIZE	MAXIMUM PRIMARY CFM	MINIMUM PRIMARY CFM	HEAT/FAN CFM	EAT °F	LAT °F	EH CAP KW	STEPS	HTR VOLT	PHASE	MCA/MOCP AMPS	INLET SP IN WG	DIS NC	RAD NC
VAV–1	CARRIER / 35E	7	575	140	460	55	85.9	4.5	SCR	208	3	15.6/20	1	21	16
VAV–2	CARRIER / 35E	4	200	55	160	55	84.6	1.5	SCR	208	3	5.2/15	1	25	20
VAV–3	CARRIER / 35E	14	2700	580	2080	55	87.21	14	SCR	208	3	36.43/40	1	27	21

NOTES:

1. DDC CONTROLS TO BE PROVIDED TO VAV BOX MANUFACTURER FOR FACTORY MOUNTING.
2. PROVIDE HEATER WITH AUTO RESET PRIMARY TEMPERATURE LIMIT, SECONDARY HIGH LIMITS, AIRFLOW SWITCH, 80/20 NICKEL–CHROMIUM ELEMENTS, AND FUSING PER UL AND NEC.
3. PROVIDE FUSED DOOR INTERLOCKING DISCONNECT.
4. PROVIDE 3/4–INCH FOIL FACED INSULATION.
5. PROVIDE SINGLE POINT POWER CONNECTION.
6. NOISE CRITERIA RATED IN ACCORDANCE WITH ARI STANDARD 880 AT 1.0" STATIC PRESSURE AT TERMINAL INLET.

CHILLED WATER AIR HANDLING UNIT SCHEDULE

AHU UNIT NO.			AHU–1	AHU–2	AHU–3
AREA SERVED			DAYROOM / KITCHEN	QUARTERS AREAS	TRAINING
MANUFACTURER			CARRIER	CARRIER	CARRIER
MODEL NO.			39S–07	39L–09	39L–05
UNIT TYPE			CENTRAL STATION	CENTRAL STATION	CENTRAL STATION
DIMENSIONS		LxWxH	2'10" X 4'2" X 5'8"	2'10" X 4'2" X 5'8"	2'2" X 3'4" X 4'5"
WEIGHT		LBS	840	890	580
NOMINAL CAPACITY		TONS	6	10	5
FAN	SUPPLY AIRFLOW	CFM	2400	3400	1800
	OUTSIDE AIRFLOW	CFM	350	475	180
	EXTERNAL STATIC PRESSURE	IN. H_2O	1.5	1.5	1
	TOTAL STATIC PRESSURE		2.07	2.21	1.67
	MAXIMUM FAN SPEED	RPM	1037	1122	1423
	FAN MOTOR	BHP/HP	1.4/1.5	2.5/3.0	1.2/1.5
	FAN MOTOR AMPERAGE (FLA)	AMPS	4.6	8.6	4.6
	FAN TYPE		FORWARD CURVE	FORWARD CURVE	FORWARD CURVE
RETURN AIR COILS COOLING COIL	AIRFLOW	CFM	2400	3400	1800
	TOTAL CAPACITY	MBH	82.89	102.63	67.06
	SENSIBLE CAPACITY	MBH	61.16	80.17	47.97
	ENTERING AIR TEMPERATURE	DB°F/WB°F	77.0/65.00	77.0/65.00	77.0/65.00
	LEAVING AIR TEMPERATURE	DB°F/WB°F	53.12/53.01	54.9/54.68	52.00/51.92
	CHILLED WATER FLOW RATE	G.P.M.	13.8	17.1	11.1
	CHILLED WATER TEMPERATURE	ENTERING °F / LEAVING °F	44/56	44/56	44/56
	COOLING COIL	ROWS/FPI	6/10	6/10	6/10
	COOLING COIL FACE	FT^2	6.94	8.33	5.21
	COIL FACE VELOCITY	FPM	345.8	408.2	345.5
	COIL AIR PRESSURE DROP	IN. H_2O	.5	.65	.52
	WATER PRESSURE DROP	FT. H_2O	4.6	3.4	5.1
FILTER TYPE			2" MERV 8	2" MERV 8	2" MERV 8
ELECTRIC		V/ϕ/HZ	208/3/60	208/3/60	208/3/60
ELECTRIC HEAT CAPACITY		KW/STAGES	9/2	NA/NA/NA	7.5/2
HEATER FLA		AMPS	25.1	NA	20.9
MCA/MOCP		AMPS	31.3/35	10.8/15	26.1/30
NOTES			ALL	ALL	1–6

NOTES:

1. VERTICAL DRAW–THRU ARRANGEMENT.
2. INTERNAL SPRING VIBRATION ISOLATION.
3. PROVIDE SECONDARY DRAIN PAN WITH FLOAT SWITCH.
4. PROVIDE STAINLESS STEEL DRAIN PAN.
5. DIVISION 16 (ELECTRICAL) TO PROVIDE STARTER/DISCONNECT.
6. ALL MOTORS TO BE PREMIUM EFFICIENT, PROVIDE 1.5 DRIVE SERVICE FACTOR. PROVIDE VFD COMPATIBLE MOTOR.
7. PROVIDE SMOKE DETECTORS IN THE SUPPLY AND RETURN DUCT.
8. PROVIDE MOTORIZED OUTSIDE AIR DAMPERS.

ASHRAE 62.1-2007 OUTSIDE AIR CALCULATION COMMERCIAL

SPACE	AREA (FT^2)	OCCUPANTS (#)	VENTILATION AIR CFM PER FT^2	VENTILATION AIR CFM PER PERSON	EXHAUST CFM PER FT^2	TOILET FIXTURES	DIVERSITY–INTERMITTENT OCCUPANCY	VENTILATION AIR CFM REQUIRED	VENTILATION AIR CFM SPECIFIED	EXHAUST CFM REQUIRED	EXHAUST CFM SPECIFIED	CFM FOR BUILDING PRESSURIZATION
100 ENTRY, 101 ACTIVITY AREA, 102 KITCHEN	1096	11	0.06	5.0	0.00	0	–	121		0		
103 OFFICE	93	1	0.06	5.0	0.00	0	–	11		0		
104 NITE ROOM	100	1	0.06	5.0	0.00	0	–	11		0		
105 ADA REST ROOM	94	0	0.00	0.0	0.00	1	–	0		50	50	
106 BUNKER ROOM	176	0	0.00	0.0	0.00	0	–	0		0	200	
AHU–1	1559	13						142	350	50	250	100
116 BATH	147	0	0.00	0.0	0.00	1	–	0		50		
117 RESTROOM	237	0	0.00	0.0	0.00	4	–	0		200		
118 BATH	104	0	0.00	0.0	0.00	1	–	0		50		
122 CORRIDOR	510	0	0.06	0.0	0.00	0	–	31		0		
114 CHIEF'S QUARTERS	162	1	0.06	5.0	0.00	0	–	15		0		
115 CAPTAIN'S QUARTERS	303	2	0.06	5.0	0.00	0	–	28		0		
120a CREW QUARTERS	119	1	0.06	5.0	0.00	0	–	12		0		
120b CREW QUARTERS	124	1	0.06	5.0	0.00	0	–	12		0		
120c CREW QUARTERS	117	1	0.06	5.0	0.00	0	–	12		0		
120d CREW QUARTERS	119	1	0.06	5.0	0.00	0	–	12		0		
120e CREW QUARTERS	121	1	0.06	5.0	0.00	0						
120f CREW QUARTERS	119	1	0.06	5.0	0.00	0						
120g CREW QUARTERS	119	1	0.06	5.0	0.00	0	–	12		0		
120h CREW QUARTERS	128	1	0.06	5.0	0.00	0	–	13		0		
AHU–2	2429	11						147	475	300	300	175
127 TRAINING	748	20	0.06	5.0	0.00	0	–	145		0		
126 MECHANICAL	180	0	0.06	0.0	0.00	0	–	11		0		
125 HALL	210	0	0.06	0.0	0.00	0	–	13		0		
123 MENS	79	0	0.00	0.0	0.00	1	–	0		50		
124 WOMENS	74	0	0.00	0.0	0.00	1	–	0		50		
AHU–3	1291	20						168	180	100	100	80

AIR COOLED CHILLER SCHEDULE

MARK		CH–1
MANUFACTURER		CARRIER
MODEL No.		30RAP0255K–9GF60
DIMENSIONS	LxWxH, INCHES	89x41x79
WEIGHT	LB	3846
COMPRESSOR TYPE		DIGITAL SCROLL
REFRIGERANT TYPE		R–410A
EFFICIENCY	EER/COP	10.2/–
EFFICIENCY, PART LOAD	IPLV EER	16.27
CAPACITY	TONS	23.39
AMBIENT TEMPERATURE	DB°F	95
CHILLED WATER TEMPERATURE	ENTERING °F / LEAVING °F	56/44
CHILLED WATER FLOW RATE	G.P.M.	46.62
PRESSURE DROP	FT. H_2O	19.4
FLUID TYPE		WATER
EVAPORATOR FOULING FACTOR		0.00010
EVAPORATOR CONNECTION SIZE	INCHES	2
COMPRESSORS / CIRCUITS	NO./NO.	1/1
COMPRESSOR POWER	NO./KW	1/24.57
INPUT POWER	KW	28.5
PUMP MOTOR	KW	1.071
PUMP FLA	AMPS	8.2
CONDENSER FANS	NO.	2
ELECTRIC	V/ϕ/HZ	208/3/60
MCA/MOCP	AMPS	131.7/175
NOTES		ALL

NOTES:

1. PROVIDE WITH FACTORY INSTALLED HYDRONIC PUMP PACKAGE.
2. PROVIDE WITH FACTORY INSTALLED LOW AMBIENT PROTECTION PACKAGE.
3. PROVIDE WITH FACTORY INSTALLED ENERGY MANAGEMENT MODULE.
4. PROVIDE WITH FACTORY INSTALLED MINIMUM LOAD CONTROL.
5. PROVIDE WITH FACTORY INSTALLED COIL PROTECTION GRILLES.
6. PROVIDE WITH FACTORY INSTALLED CONDENSER COIL CORROSION PROTECTION–MILD COASTAL, AL FINS, PRECOATED
7. PROVIDE WITH FIELD INSTALLED CONTROL DISPLAY ACCESS DOOR.
8. PROVIDE WITH FIELD INSTALLED CHILLED WATER STORAGE TANK.
9. PROVIDE WITH FIELD INSTALLED VIBRATION ISOLATION.
10. PROVIDE WITH DIGITAL SCROLL COMPRESSOR FOR CAPACITY CONTROL

AIR SEPARATOR SCHEDULE

MARK		AS–1
SERVICE		CHILLED WATER
MANUFACTURER		BELL & GOSSETT
MODEL		RL–2N
WATER FLOW RATE	GPM	46.62
PRESSURE DROP	FT. H_2O	1.0
INLET	INCHES	2
OUTLET	INCHES	2
CONNECTIONS	TYPE	SCREW
STRAINER	YES/NO	NO

CITY OF TAMPA
CONTRACT ADMINISTRATION DEPARTMENT
PLANNING AND DESIGN DIVISION
306 E. JACKSON STREET 4 NORTH
TAMPA, FLORIDA 33602
p: 813. 274. 8456 – f: 813. 274. 8080
url: www.tampagov.net

James E. Jackson, Jr. AIA, NOMA
City Architect
Edward D. Rice, AIA
Project Architect
Kevin L. Henika, AIA
Project Architect
Thomas A. Hester, Sr., AIA, NOMA
Project Architect
David R. Pagitt
Supervisor, Architectural Drafting
Kinsey C. Tillman
Drafting Technician
Jerry P. Sanders
Drafting Technician
Byron K. Thomas, LEED AP
Drafting Technician

MEP CONSULTANT
GRINER ENGINEERING, INC.
1628 1st. AVENUE NORTH
ST. PETERSBURG, FL 33713

STRUCTURAL CONSULTANT
BILLER REINHART STRUCTURAL GROUP, INC.
4014 GUNN HWY. SUITE 248
TAMPA, FL 33713

CIVIL CONSULTANT
5 M CIVIL LLC
12315 WYCLIFF PLACE
TAMPA, FL 33626

LANDSCAPE CONSULTANT
DAVID CONNER & ASSOCIATES
1509 W. SWANN AVENUE,SUITE 255
TAMPA, FL 33606

FIRE STATION 23
20770 TROUT CREEK DR.
TAMPA, FL 33647

DPW FILE NUMBER

DPW NUMBER
17–C–00037

ISSUE DATE
07–28–2017

DRAWN BY

REVISIONS

SEAL

Joseph H. Griner III, P.E. FL. 39491

SCALE: N.T.S

MECHANICAL SCHEDULES

SHEET NUMBER
M–5.1
X OF X

GRINER
GRINER ENGINEERING, INC.
1628 First Avenue North
St. Petersburg, Florida 33713
Phone: (727)-822-2335
Fax: (727)-821-3361
Certificate of Authorization #3173

Date	06-15-2017
Drawn	JL
Designed	JL
EOR	JHG
Job no.	17049

KITCHEN HOOD SCHEDULE

MARK	MANUFACTURER	MODEL	TYPE	CLASSIFICATION	DIMENSIONS			EXHAUST			SUPPLY			FILTER(S)				LIGHT(S)			UTILITY CABINETS						FIRE SYTEM PIPING	HOOD WEIGHT
					LENGTH	WIDTH	DEPTH	CFM	# OF CONN.	CONN. SIZE	CFM	# OF CONN.	CONN. SIZE	TYPE	QTY	HEIGHT	LENGTH	QTY	TYPE	WIRE GUARD	LOCATION	FIRE SYSTEM		ELECTRICAL	SWITCHES			
																						TYPE	SIZE	MODEL #	QUANTITY	LOCATION		
HOOD	CAPTIVEAIRE	5424 ND-2-PSP-F	WALL MOUNTED CANOPY	TYPE 1	72	4'-6"	–	1050	1	10ø	875	2	26X8	ALUMINUM BAFFLE WITH HANDLES	2	20	16	2	L55 SERIES E26	NO	LEFT	ANSUL R-102	–	SC-111110 FP	1 LIGHT 1 FAN	OUTSIDE	YES	502 LBS.
															2	20	16											

NOTES:

1. FURNISH WITH FACTORY INSTALLED PRE-PACKAGED UL300 COMPLIANT ANSUL FIRE SUPPRESION SYSTEM. AGENT TANK AND ACCESSORIES SHALL BE LOCATED IN AN ENCLOSURE AT THE END OF THE HOOD.

FAN SCHEDULE

MARK		EF-1	EF-2	EF-3	EF-4	EF-5	EF-6	EF-7	EF-8	EF-9	EF-10
AREA SERVED		116 BATHROOM	118 BATHROOM	105 BATHROOM	117 BATHROOM	106 BUNKER ROOM	113 APPARATUS BAY	113 APPARATUS BAY	NOT USED	123 BATHROOM	124 BATHROOM
SERVICE		EXHAUST	EXHAUST	EXHAUST	EXHAUST	EXHAUST	EXHAUST	EXHAUST		EXHAUST	EXHAUST
MANUFACTURER		GREENHECK	GREENHECK	GREENHECK	GREENHECK	GREENHECK	GREENHECK			GREENHECK	GREENHECK
MODEL		SP-B80	SP-B80	SP-B80	SP-A290	SP-A190	BSQ-240-50	BSQ-240-50		SP-B80	SP-B80
AIR QUANTITY	CFM	50	50	50	200	100	10,000	10,000		50	50
EXT. STATIC PRESSURE	IN. H_2O	0.4	0.4	0.4	0.35	0.35	0.75	0.75		0.4	0.4
FAN SPEED	RPM	819	819	819	946	100	1128	1128		819	819
DRIVE		DIRECT	DIRECT	DIRECT	DIRECT	DIRECT	BELT	BELT		DIRECT	DIRECT
SONES		3.2	3.2	3.2	2.8	2.4	30	30		3.2	3.2
MOTOR	HP OR W	54 W	54 W	54 W	81 W	113 W	3.84	3.84		54 W	54 W
ELECTRICAL	V/ϕ/HZ	115/1/60	115/1/60	115/1/60	115/1/60	115/1/60	208/3/60	208/3/60		115/1/60	115/1/60
NOTES		1, 2, 3, 4, 5, 9	1, 2, 3, 4, 5, 9	1, 2, 3, 4, 5, 9	1, 2, 3, 4, 5, 9	2, 3, 4, 5, 6, 9	2, 3, 7, 8	2, 3, 7, 10, 11, 12, 13, 14,		1, 2, 3, 4, 5, 9	1, 2, 3, 4, 5, 9

NOTES:

1. INTERLOCKED WITH LIGHT SWITCH.
2. FURNISH WITH INTERNAL OVERLOAD PROTECTION.
3. FURNISH WITH INTEGRAL DISCONNECT MEANS (TOGGLE SWITCH OR CORD AND PLUG).
4. FURNISH WITH INTEGRAL SOLID STATE FAN SPEED CONTROLLER.
5. FURNISH WITH INTEGRAL BACKDRAFT DAMPER.
6. CONTINUOUS FAN OPERATION.
7. ALL 24 VOLT WIRING SHALL BE PROVIDED BY MECHANICAL CONTRACTOR.
8. INTERLOCK WITH THERMOSTAT.
9. PROVIDE MANUFACTURER'S PITCHED ROOF CAP.
10. EXHAUST FAN SEQUENCE TO START UPON CARBON MONOXIDE SENSORS READ 8PPM(ADJUSTABLE) OR THE OPENING OR CLOSING OF ANY OVERHEAD DOORS. OVERHEAD DOOR SWITCHED SHALL INDICATE TRAVEL BEYOND 2 INCHES FORM AN OPEN OR CLOSED POSITION.
11. EXHAUST FANS ARE ON A OFF DELAY TIM SEQUENCE OF 15 MINUTES (ADJUSTABLE).
12. ONCE CARBON MONOXIDE LEVELS DROP BELOW 8PPM, EXHAUST FANS WILL RUN FOR AN ADDITIONAL 15 MINUTES (ADJUSTABLE) AND THEN TURN OFF.
13. IF CARBON MONOXIDE SENSORS READ BEYOND 25PPM (ADJUSTABLE), AUDIBLE AND VISUAL ALARMS WILL BE ACTIVATED.
14. PROVIDE A TIMED OVERRIDE SWITCH TO OPERATE THE EXHAUST FANS ON DEMAND.

HOOD FAN SCHEDULE

MARK		HEF-1	HSF-1
SERVICE		EXHAUST	INTAKE
MANUFACTURER		CAPTIVEAIRE	CAPTIVEAIRE
MODEL		DU50HFA	INLINE1L-G10
AIR QUANTITY	CFM	1050	875
EXT. STATIC PRESSURE	IN. H_2O	1	0.5
FAN SPEED	RPM	1483	752
DRIVE		BELT	BELT
SONES		–	–
MOTOR	HP OR W	0.5 HP	0.5 HP
ELECTRICAL	V/ϕ/HZ	115/1/60	115/1/60
NOTES		1, 2, 3, 4, 5	2, 3, 7, 8

NOTES:

1. INTERLOCKED WITH HOOD.
2. FURNISH WITH INTERNAL OVERLOAD PROTECTION.
3. FURNISH WITH INTEGRAL DISCONNECT MEANS (TOGGLE SWITCH OR CORD AND PLUG).
4. FURNISH WITH INTEGRAL BACKDRAFT DAMPER.
5. ALL 24 VOLT WIRING SHALL BE PROVIDED BY MECHANICAL CONTRACTOR.

LOUVER SCHEDULE

UNIT NUMBER		L-1	L-2	L-3	L-4
SERVICE		OA INTAKE	NOT USED	EXHAUST	O.A. INTAKE
MANUFACTURER		GREENHECK		GREENHECK	GREENHECK
MODEL		EVH-501D		EVH-501D	EVH-501D
FLORIDA PRODUCT APPROVAL No.		FL19277.1		FL19277.1	FL19277.1
MIAMI-DADE NOA No.		15-4015.05		15-4015.05	15-4015.05
MATERIAL		ALUMINUM		ALUMINUM	ALUMINUM
FRAME		FLANGED		FLANGED	FLANGED
AIR QUANTITY	CFM	475		6000	10,000
WIDTH	INCHES	36		18	96
HEIGHT	INCHES	12		104	72
FREE AREA	FT^2	0.91		6.19	28.54
NOTES		ALL		ALL	ALL

NOTES:

1. PROVIDE WITH ALUMINUM BIRD & INSECT SCREENS.
2. COORDINATE COLOR WITH ARCHITECT.

VENTILATOR SCHEDULE

UNIT NUMBER		GRSI-1	GRSR-1
SERVICE		KITCHEN HOOD	EQUIPMENT BAY
AIR QUANTITY	CFM	1260	10000
STATIC PRESSURE	IN. H_2O	0.016	0.104
THROAT AREA	FT^2	5.03	12.83
THROAT VELOCITY	FPM	250.0	779.4
ROOF OPENING	INCHES	32.5x32.5	50.5x50.5
MANUFACTURER		GREENHECK	GREENHECK
MODEL		GRSI 30	GRSR 48
NOTES		ALL	ALL

NOTES:

1. PROVIDE WITH ALUMINUM BIRDSCREEN.
2. FURNISH WITH 14-INCH HIGH (MIN.) ROOF CURB WHILE MAINTAINING A MIN. OF 8-INCH CLEARANCE BETWEEN BASE OF UNIT AND FINISHED ROOF SURFACE.

GRINER ENGINEERING, INC.
1628 First Avenue North
St. Petersburg, Florida 33713
Phone: (727)-822-2335
Fax: (727)-821-3361
Certificate of Authorization #3173

Date	06-15-2017
Drawn	JL
Designed	JL
EOR	JHG
Job no.	17049

CITY OF TAMPA
CONTRACT ADMINISTRATION DEPARTMENT
PLANNING AND DESIGN DIVISION
306 E. JACKSON STREET 4 NORTH
TAMPA, FLORIDA 33602
p: 813. 274. 8456 - f: 813. 274. 8080
url: www.tampagov.net

James E. Jackson, Jr. AIA, NOMA
City Architect
Edward D. Rice, AIA
Project Architect
Kevin L. Henika, AIA
Project Architect
Thomas A. Hester, Sr., AIA, NOMA
Project Architect
David R. Pagitt
Supervisor, Architectural Drafting
Kinsey C. Tillman
Drafting Technician
Jerry P. Sanders
Drafting Technician
Byron K. Thomas, LEED AP
Drafting Technician

MEP CONSULTANT
GRINER ENGINEERING, INC.
1628 1st. AVENUE NORTH
ST. PETERSBURG, FL 33713

STRUCTURAL CONSULTANT
BILLER REINHART STRUCTURAL GROUP, INC.
4014 GUNN HWY. SUITE 248
TAMPA, FL 33713

CIVIL CONSULTANT
B M CIVIL LLC
12315 WYCLIFF PLACE
TAMPA, FL 33626

LANDSCAPE CONSULTANT
DAVID CONNER & ASSOCIATES
1509 W. SWANN AVENUE,SUITE 255
TAMPA, FL 33606

FIRE STATION 23
20770 TROUT CREEK DR.
TAMPA, FL 33647

DPW FILE NUMBER

DPW NUMBER
17-C-00037

ISSUE DATE
07-28-2017

DRAWN BY

REVISIONS

SEAL

Joseph H. Griner III, P.E. FL. 39491

SCALE: N.T.S

MECHANICAL SCHEDULES

SHEET NUMBER
M-5.2
X OF X

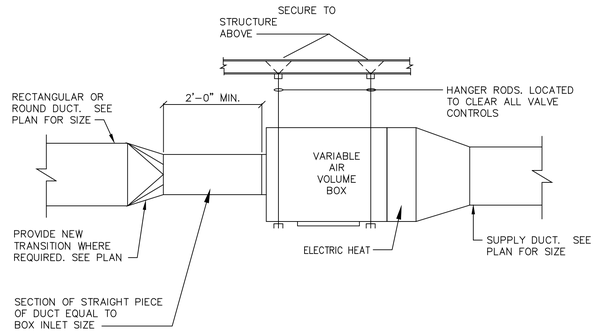

VAV BOX DETAIL

NOT TO SCALE

RECTANGULAR DUCT HANGERS MINIMUM SIZE

MAXIMUM HALF OF DUCT PERIMETER	Pair at 10 ft. Spacing		Pair at 8 ft. Spacing		Pair at 5 ft. Spacing		Pair at 4 ft. Spacing	
	STRAP	WIRE/ ROD	STRAP	WIRE/ ROD	STRAP	WIRE/ ROD	STRAP	WIRE/ ROD
P/2 = 30"	1" x 22 ga.	10 ga. (.135")	1" x 22 ga.	10 ga. (.135")	1" x 22 ga.	10 ga. (.106")	1" x 22 ga.	10 ga. (.106")
P/2 = 72"	1" x 18 ga.	3/8"	1" x 20 ga.	1/4"	1" x 22 ga.	1/4"	1" x 22 ga.	1/4"
P/2 = 96"	1" x 16 ga.	3/8"	1" x 18 ga.	3/8"	1" x 20 ga.	3/8"	1" x 22 ga.	1/4"
P/2 = 120"	1\" x 16 ga.	1/2"	1" x 16 ga.	3/8"	1" x 18 ga.	3/8"	1" x 20 ga.	1/4"
P/2 = 168"	1\" x 16 ga.	1/2"	1" x 16 ga.	1/2"	1" x 16 ga.	3/8"	1" x 18 ga.	3/8"
P/2 = 192"		1/2"	1" x 16 ga.	1/2"	1" x 16 ga.	3/8"	1" x 16 ga.	3/8"
P/2 = 193" up	SPECIAL ANALYSIS REQUIRED							

WHEN STRAPS ARE LAP JOINED USE THESE MINIMUM FASTENERS:	SINGLE HANGER MAXIMUM ALLOWABLE LOAD	
	STRAP	WIRE OR ROD (Dia.)
1" x 18, 20, 22 ga.–two #10 or one |" bolt 1" x 16 ga.–two |" dia. 1" x 16 ga.–two |" dia. Place fasteners in series, not side by side.	1" x 22 ga.–260 lbs. 1" x 20 ga.–320 lbs. 1" x 18 ga.–420 lbs. 1" x 16 ga.–700 lbs. 1\" x 16 ga.–1100 lbs.	0.106"–80lbs 0.135"–120 lbs. 0.162" 160 lbs. |"–270 lbs. |"–680 lbs. \"–1250 lbs. |"–2000 lbs. |"–3000 lbs.

NOTES:

1. Dimensions other than gauge are in inches.
2. Tables allow for duct weight, 1 lb/sf insulation weight and normal reinforcement and trapeze weight, but no external loads!
3. For custom design of hangers, designers may consult SMACNA's rectangular Industrial duct standards, the AISI Cold Formed Steel Design Manual and the AISC Steel Construction Manual.
4. Straps are galvanized steel; other materials are uncoated steel.
5. Allowable loads for P/2 assume that ducts are 16 ga. maximum, except that when maximum duct dimension (w) is over 60" then P/2 maximum is 1.25 w.
6. For upper attachments see Fig. 4–2.
7. For lower attachments see Fig. 4–4.
8. For trapeze sizes sww Table 4–3 and Fig. 4–5.
9. 12, 10 or 8 ga. wire is steel of black annealed, bright basic or galvanized type.

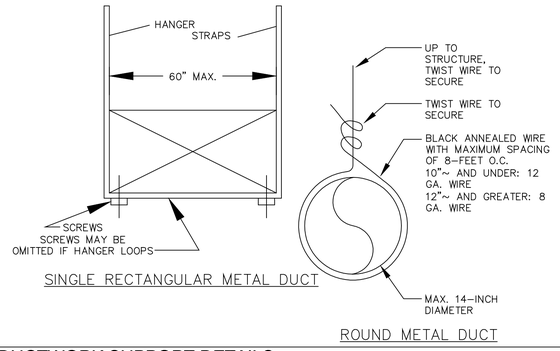

SINGLE RECTANGULAR METAL DUCT

ROUND METAL DUCT

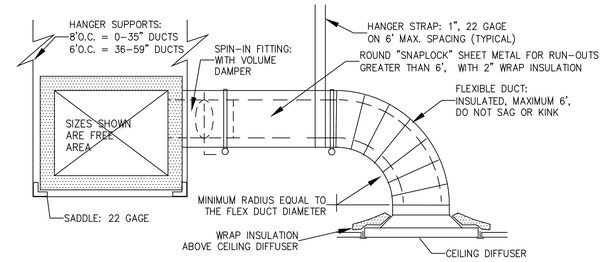

NOTES:

1. HANGER SUPPORTS SHALL BE AS NOTED ABOVE FOR DUCTS UP TO 24", AND WITH TRAPEZE HANGERS FOR DUCTS 25" AND ABOVE.

2. ELBOWS SHALL BE SQUARE NECK (SAME IN AND OUT DIMENSION) WITH 2" DOUBLE THICKNESS TURNING VANES.

3. OFFSETS SHALL NOT EXCEED 30 DEGREE ANGLE, AND SHALL NOT REDUCE THE FREE AREA OF THE DUCT.

4. TRANSITIONS SHALL NOT EXCEED 1:3 RATIO (4" TRANSITION PER FOOT SINGLE SIDED TRANSITION, AND 8" PER FOOT DOUBLE SIDED TRANSITION).

5. RECTANGULAR BRANCH CONNECTIONS SHALL BE 45 DEGREE ENTRY TYPE, WITH METAL SLEEVE & CLINCH LOCK CONNECTION. ENTRY LENGTH SHALL BE 25% OF BRANCH DUCT WIDTH.

6. ROUND BRANCH DUCT CONNECTIONS SHALL BE WITH "FLEXMASTER" FLDE SPIN–IN FITTINGS, WITH SCOOP, DAMPER AND HANDLE.

7. FLEXIBLE ROUND DUCT SHALL INCLUDE: HELIX COIL FLEXIBLE DUCTING, A 1–1/2" BLANKET INSULATION WITH MINIMUM 6.0 R VALUE, AND A ALUMINUM FOIL OUTER VAPOR BARRIER, AND BE UL–181 APPROVED, 25 OR LESS FLAME SPREAD AND 50 OR LESS SMOKE DEVELOPED. EQUAL TO "FLEXMASTER" TYPE 3M. TAPE INNER COIL OF FLEX TO THE DIFFUSER COLLAR. TAPE COMPLETELY AROUND AND SECURE WITH PANDUIT OR EQUAL STRAPPING SYSTEM TO ASSURE AN AIR TIGHT SEAL. USE STEEL STRAPS WHERE REQUIRED BY LOCAL JURISDICTION. PULL FLEX INSULATION AND OUTER COVER DOWN TIGHT OVER GRILLE COLLAR. DO NOT STRAP INSULATION DOWN. STRETCH FLEX TIGHT BETWEEN DUCT AND DIFFUSER TO AVOID KINKS, SUPPORT EVERY FOUR FEET WITH 2" STEEL STRAP.

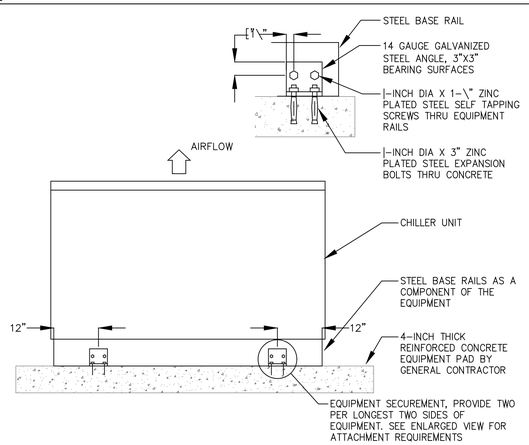

CONCRETE PADV UNIT TIE-DOWN DETAIL

NOT TO SCALE

DUCTWORK SUPPORT DETAILS

NOT TO SCALE

SUPPLY DIFFUSER RUNOUT DETAIL

NOT TO SCALE

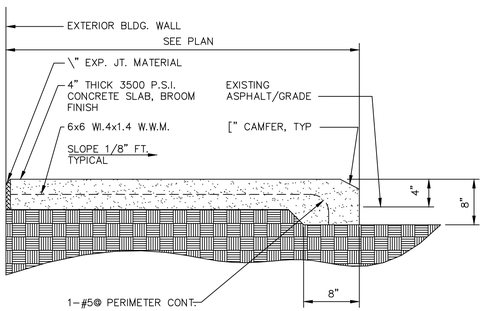

CONCRETE PAD DETAIL

NOT TO SCALE

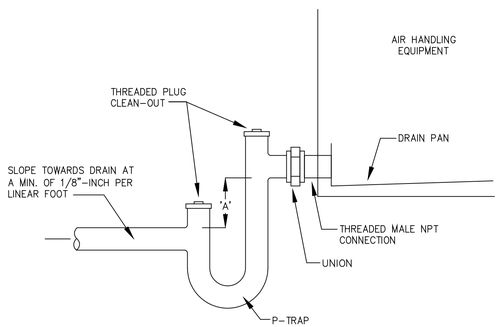

NOTES:
1. CONDENSATE PIPE SIZE SHALL BE FULL SIZE OF UNIT DRAIN CONNECTION, MIN. SIZE OF 3/4–INCH.
2. STEM HEIGHT 'A' SHALL BE A MINIMUM OF 1–INCH GREATER THAN FAN SUCTION PRESSURE. MINIMUM HEIGHT SHALL BE 3–INCHES.

CONDENSATE DRAIN TRAP DETAIL

NOT TO SCALE

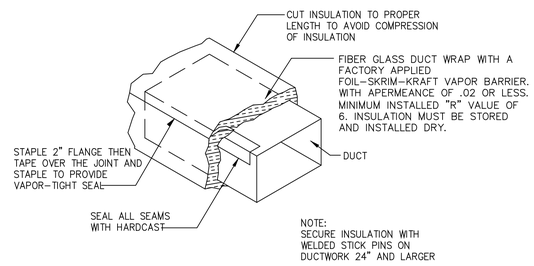

DUCT INSULATION DETAIL

NOT TO SCALE

CITY OF TAMPA
CONTRACT ADMINISTRATION DEPARTMENT
PLANNING AND DESIGN DIVISION
306 E. JACKSON STREET 4 NORTH
TAMPA, FLORIDA 33602
p: 813. 274. 8456 – f: 813. 274. 8080
url: www.tampagov.net

James E. Jackson, Jr. AIA, NOMA
City Architect
Edward D. Rice, AIA
Project Architect
Kevin L. Henika, AIA
Project Architect
Thomas A. Hester, Sr., AIA, NOMA
Project Architect
David R. Pagitt
Supervisor, Architectural Drafting
Kinsey C. Tillman
Drafting Technician
Jerry P. Sanders
Drafting Technician
Byron K. Thomas, LEED AP
Drafting Technician

MEP CONSULTANT
GRINER ENGINEERING, INC.
1628 1st. AVENUE NORTH
ST. PETERSBURG, FL 33713

STRUCTURAL CONSULTANT
BILLER REINHART STRUCTURAL GROUP, INC.
4014 GUNN HWY. SUITE 248
TAMPA, FL 33713

CIVIL CONSULTANT
B M CIVIL LLC
12315 WYCLIFF PLACE
TAMPA, FL 33626

LANDSCAPE CONSULTANT
DAVID CONNER & ASSOCIATES
1809 W. SWANN AVENUE,SUITE 255
TAMPA, FL 33606

FIRE STATION 23
20770 TROUT CREEK DR.
TAMPA, FL 33647

DPW FILE NUMBER

DPW NUMBER
17–C–00037

ISSUE DATE
07–28–2017

DRAWN BY

REVISIONS

SEAL

Joseph H. Griner III, P.E. FL. 39491

SCALE: N.T.S

MECHANICAL DETAILS

SHEET NUMBER
M–6.0
X OF X

GRINER
GRINER ENGINEERING, INC.
1628 First Avenue North
St. Petersburg, Florida 33713
Phone: (727)-822-2335
Fax: (727)-821-3361
Certificate of Authorization #3173

Date	06-15-2017
Drawn	JL
Designed	JL
EOR	JHG
Job no.	17049

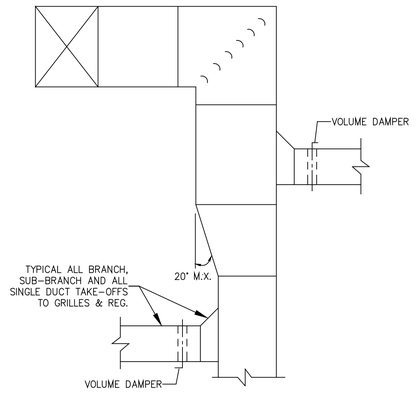

DUCT - TYPICAL

NOT TO SCALE

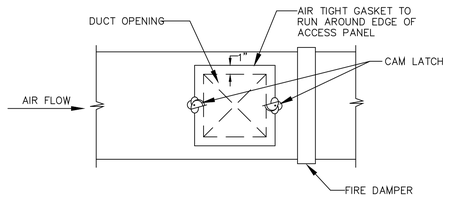

ACCESS PANEL SIZE SCHEDULE	
DUCT SIZE	ACCESS PANEL SIZE
6" TO 15"	10" W x (DAMPER DEPTH-2") D
15" TO 21"	12" W x (DAMPER DEPTH-2") D
21' AND ABOVE	18" W x (DAMPER DEPTH-2") D

ALL OTHER ACCESS PANELS TO BE A MINIMUM OF 15" x 15" WHERE DUCT SIZE ALLOWS. USE FOUR CAM LATCHES ON PANELS LARGER THAN 18" x 18" SIZE.

ACCESS PANEL DETAIL

NOT TO SCALE

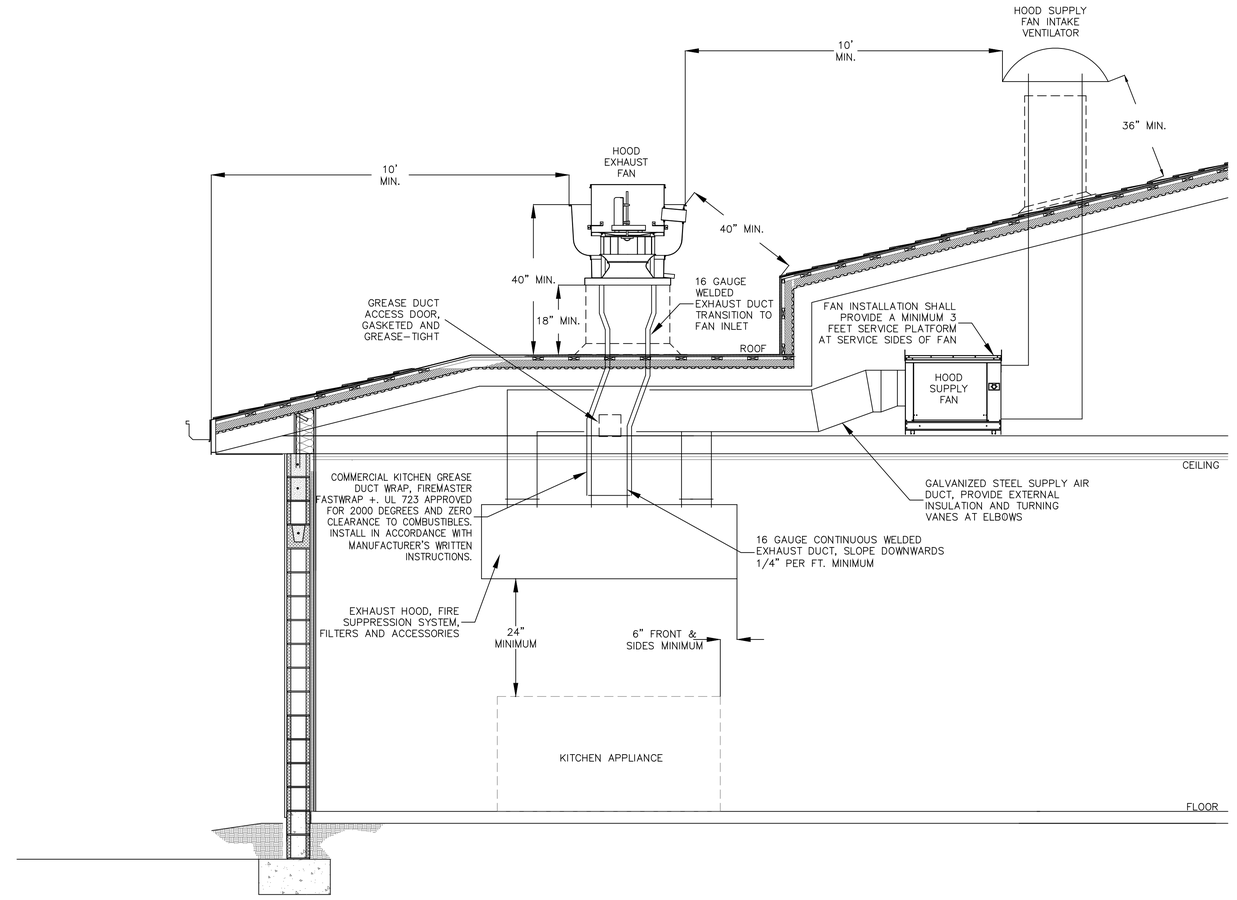

KITCHEN HOOD DUCT CONNECTION DETAIL

NOT TO SCALE

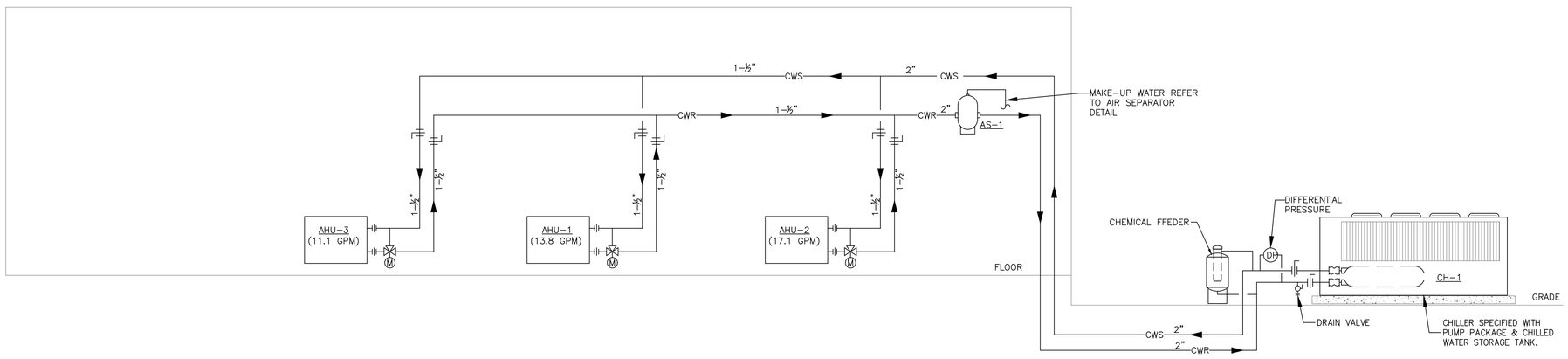

CHILLED WATER PIPING DETAIL

NOT TO SCALE

CITY OF TAMPA
CONTRACT ADMINISTRATION DEPARTMENT
PLANNING AND DESIGN DIVISION
306 E. JACKSON STREET 4 NORTH
TAMPA, FLORIDA 33602
p: 813. 274. 8456 - f: 813. 274. 8080
url: www.tampagov.net

James E. Jackson, Jr. AIA, NOMA
City Architect
Edward D. Rice, AIA
Project Architect
Kevin L. Henika, AIA
Project Architect
Thomas A. Hester, Sr., AIA, NOMA
Project Architect
David R. Pagitt
Supervisor, Architectural Drafting
Kinsey C. Tillman
Drafting Technician
Jerry P. Sanders
Drafting Technician
Byron K. Thomas, LEED AP
Drafting Technician

MEP CONSULTANT
GRINER ENGINEERING, INC.
1628 1st. AVENUE NORTH
ST. PETERSBURG, FL 33713

STRUCTURAL CONSULTANT
BILLER REINHART STRUCTURAL GROUP, INC.
4014 GUNN HWY. SUITE 248
TAMPA, FL 33713

CIVIL CONSULTANT
B M CIVIL LLC
12315 WYCLIFF PLACE
TAMPA, FL 33626

LANDSCAPE CONSULTANT
DAVID CONNER & ASSOCIATES
1809 W. SWANN AVENUE,SUITE 255
TAMPA, FL 33606

FIRE STATION 23
20770 TROUT CREEK DR.
TAMPA, FL 33647

DPW FILE NUMBER

DPW NUMBER
17-C-00037

ISSUE DATE
07-28-2017

DRAWN BY

REVISIONS

SEAL

Joseph H. Griner III, P.E. FL. 39491

SCALE: N.T.S

MECHANICAL DETAILS

SHEET NUMBER
M-6.1
X OF X

GRINER
GRINER ENGINEERING, INC.
1628 First Avenue North
St. Petersburg, Florida 33713
Phone: (727)-822-2335
Fax: (727)-821-3361
Certificate of Authorization #3173

Date	06-15-2017
Drawn	JL
Designed	JL
EOR	JHG
Job no.	17049

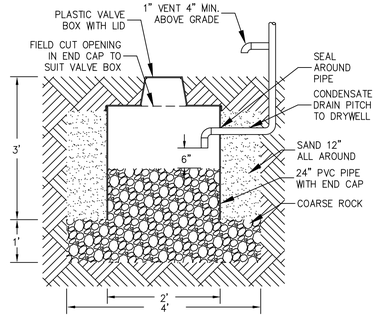

CONDENSATE DRYWELL DETAIL

NOT TO SCALE

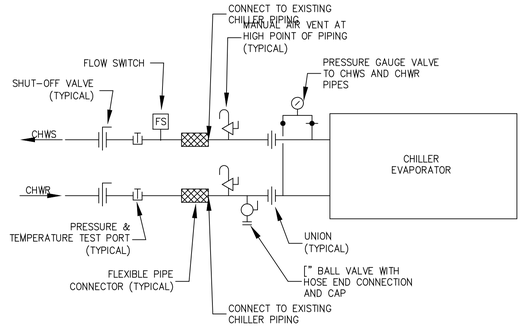

NOTES:
1. PROVIDE ALL VALVES, FITTINGS, AND SPECIALTIES REQUIRED FOR FOR COMPLETE INSTALLATION AND SERVICE OF CHILLER.
2. SUPPORT ALL PIPING INDEPENDENTLY OF CHILLER AND CONDENSER.
3. CONTRACTOR SHALL PROVIDE 1/4 SCALE PIPING DIAGRAM TO ENGINEER PRIOR TO COMMENCING WORK.
4. PIPING AT CHILLER SHALL BE ARRANGED TO BE REMOVABLE.

CHILLER PIPING DIAGRAM

NOT TO SCALE

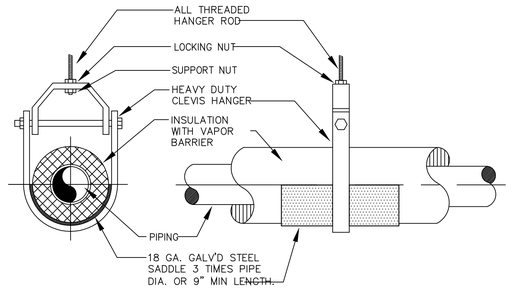

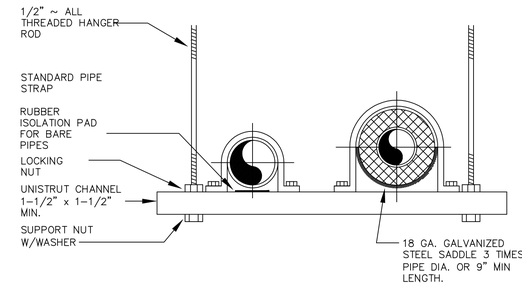

PIPE HANGERS DETAIL

NOT TO SCALE

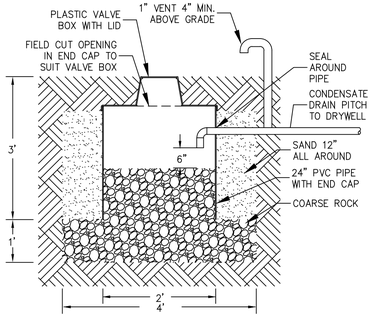

ALT CONDENSATE DRYWELL DETAIL

NOT TO SCALE

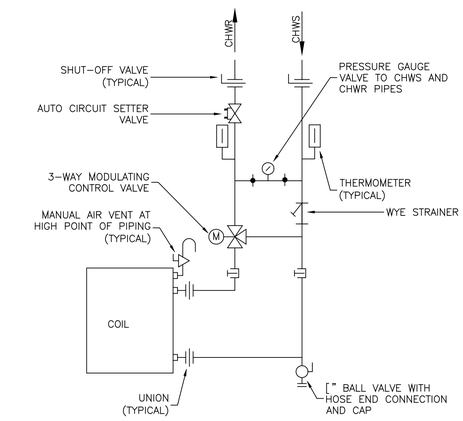

AIR HANDLER UNIT CHILLED WATER COIL PIPING DIAGRAM

NOT TO SCALE

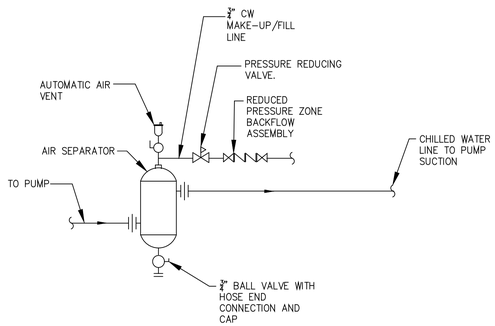

AIR SEPARATOR DETAIL

NOT TO SCALE

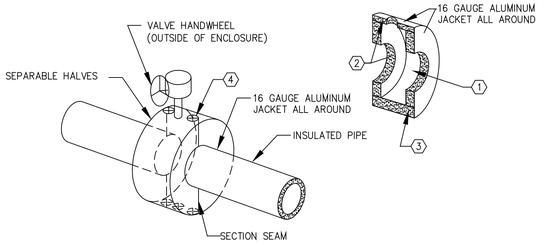

NOTES:
VALVES, FITTING AND FLOWMETERS SHALL BE ENCASED IN ELASTOMERIC FOAM INSULATION WHICH CAN BE REMOVED AND REUSED. A BOX FRAME IS CONSTRUCTED OF LIGHT GAUGE METAL TO WHICH ELASTOMERIC INSULATION IS APPLIED. INSULATION MAY BE ADHERED DIRECTLY TO SURFACES WHICH DO NOT REQUIRE MAINTENANCE REMOVAL. CARE SHOULD BE TAKEN TO PROVIDE A TIGHT SEAL. WHERE INSULATION IS NOT ADHERED TOGETHER.

KEYED NOTES
1. VALVE OR FITTING SURFACES
2. ELASTOMERIC FOAM INSULATION CUT TO FIT METAL FRAME WITH CUT-OUTS
3. ADHESIVE
4. STAINLESS STEEL LATCH. (TYPICAL OF BOTH ENDS)

REMOVABLE / REPLACEABLE COVER FOR VALVES/FITTINGS DETAIL

NOT TO SCALE

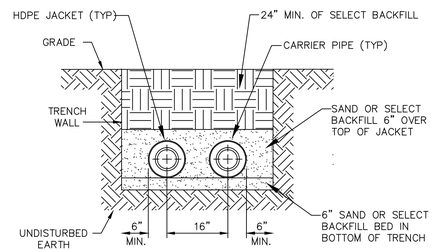

BURIED CHILLED WATER PIPE TRENCH DETAIL

NOT TO SCALE

CITY OF TAMPA
CONTRACT ADMINISTRATION DEPARTMENT
PLANNING AND DESIGN DIVISION
306 E. JACKSON STREET 4 NORTH
TAMPA, FLORIDA 33602
p: 813. 274. 8456 - f: 813. 274. 8080
url: www.tampagov.net

James E. Jackson, Jr. AIA, NOMA
City Architect
Edward D. Rice, AIA
Project Architect
Kevin L. Henika, AIA
Project Architect
Thomas A. Hester, Sr., AIA, NOMA
Project Architect
David R. Pagitt
Supervisor, Architectural Drafting
Kinsey C. Tillman
Drafting Technician
Jerry P. Sanders
Drafting Technician
Byron K. Thomas, LEED AP
Drafting Technician

MEP CONSULTANT
GRINER ENGINEERING, INC.
1628 1st. AVENUE NORTH
ST. PETERSBURG, FL 33713

STRUCTURAL CONSULTANT
BILLER REINHART STRUCTURAL GROUP, INC.
4014 GUNN HWY. SUITE 248
TAMPA, FL 33713

CIVIL CONSULTANT
B M CIVIL LLC
12315 WYCLIFF PLACE
TAMPA, FL 33626

LANDSCAPE CONSULTANT
DAVID CONNER & ASSOCIATES
1809 W. SWANN AVENUE,SUITE 255
TAMPA, FL 33606

FIRE STATION 23
20770 TROUT CREEK DR.
TAMPA, FL 33647

DPW FILE NUMBER

DPW NUMBER
17-C-00037

ISSUE DATE
07-28-2017

DRAWN BY

REVISIONS

SEAL

Joseph H. Griner III, P.E. FL. 39491

SCALE: N.T.S

MECHANICAL DETAILS

SHEET NUMBER
M-6.2
X OF X

GRINER
GRINER ENGINEERING, INC.
1628 First Avenue North
St. Petersburg, Florida 33713
Phone: (727)-822-2335
Fax: (727)-821-3361
Certificate of Authorization #3173

Date	06-15-2017
Drawn	JL
Designed	JL
EOR	JHG
Job no.	17049

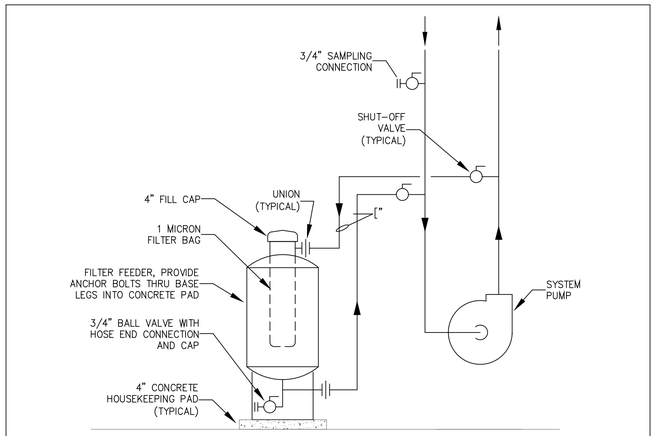

BYPASS FILTER FEEDER PIPING DIAGRAM

NOT TO SCALE

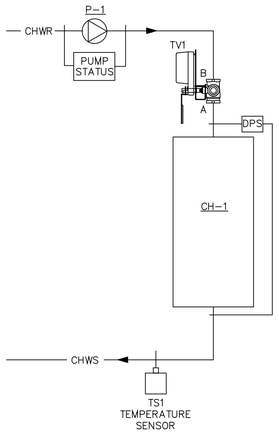

CONTROL POINT MATRIX

	ANALOG INPUT					ANALOG OUTPUT			DIGITAL INPUT				DIGITAL OUTPUT				SYSTEM POINTS			
	TEMPERATURE	PRESSURE DIFFERENTIAL	SETPOINT ADJUSTMENT	---	---	---	---	VALVE POSITION	---	---	STATUS	---	---	---	ENABLED	---	---	ALARM	FAILURE	HIGH/LOW LIMIT	---
CHILLED WATER SUPPLY	X	X																		X	
CHILLED WATER RETURN	X	X																		X	
PRIMARY PUMPS									X				X				X	X			
CHILLERS			X						X				X				X	X			

SEQUENCE OF OPERATION:

THE CHILLED WATER PUMP SHALL BE COMMANDED TO START/STOP BASED ON AN 7-DAY TIME SCHEDULE, OR UNOCCUPIED MODE TEMPERATURE/HUMIDITY OVERRIDE.

UPON VERIFICATION OF PUMP STATUS THE CHILLER SHALL BE COMMANDED TO OPERATE AND MAINTAIN A LEAVING CHILLED WATER TEMPERATURE OF 44 DEG. F.

CHILLER PLANT CONTROL SCHEMATIC

N.T.S.

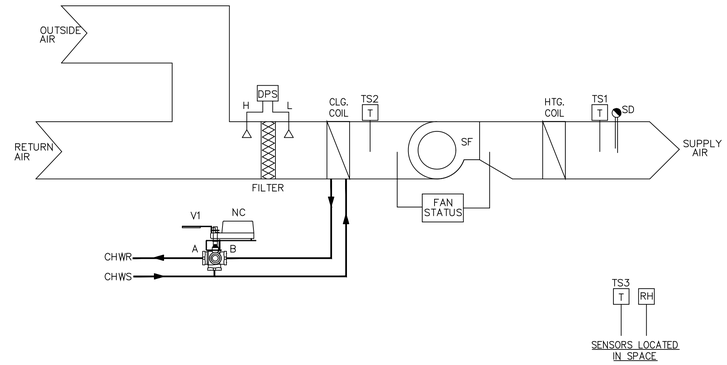

CONTROL POINT MATRIX

	ANALOG INPUT					ANALOG OUTPUT			DIGITAL INPUT				DIGITAL OUTPUT				SYSTEM POINTS			
	TEMPERATURE	HUMIDITY	CARBON DIOXIDE LEVEL	FILTER STATIC PRESSURE DIFFERENTIAL	SETPOINT ADJUSTMENT	---	---	VALVE POSITION	---	---	STATUS	---	---	---	ENABLED	DAMPER POSITION	---	ALARM	FAILURE	HIGH/LOW LIMIT	---
OUTSIDE AIR DAMPER																X		X	X		
FILTERS				X														X		X	
COOLING COIL (TS2)	X							X										X		X	
SUPPLY FAN										X			X					X	X		
HEATING COIL (TS1)	X							X										X		X	
SMOKE DETECTOR																		X			
CONDITIONED SPACE (TS3)	X	X				X												X		X	

SEQUENCE OF OPERATION:

THE AIR HANDLER SHALL BE COMMANDED TO START/STOP BASED ON AN 7-DAY TIME SCHEDULE OR TEMPERATURE/HUMIDITY OVERRIDE.

OCCUPIED MODE:

UPON VERIFICATION OF SUPPLY FAN STATUS THE OUTSIDE AIR DAMPER (D1) SHALL OPEN TO THE SETPOINT POSITION.

UPON VERIFICATION OF SUPPLY FAN STATUS THE CHILLED WATER VALVE (V1) SHALL MODULATE TOWARD THE OPEN POSITION TO MAINTAIN A SPACE TEMPERATURE SETPOINT (TS3) OF 75 DEG.. F (ADJUSTABLE). WHEN SPACE TEMPERATURE SETPOINT (TS3) DROPS BELOW 75 DEG.. F. THE CHILLED WATER VALVE (V1) SHALL BE COMMANDED TO MODULATE TOWARDS THE CLOSED POSITION TO MAINTAIN A SPACE TEMPERATURE SETPOINT (TS3) OF 75 DEG.. F (ADJUSTABLE). UPON A FURTHER DROP IN SPACE TEMPERATURE THE ELECTRIC HEATING ELEMENT SHALL BE ACTIVATED TO MAINTAIN A SPACE HEATING TEMPERATURE SETPOINT (TS3) OF 70 DEG. F. (ADJUSTABLE).

HUMIDITY OVERRIDE MODE:

UPON A RISE IN SPACE HUMIDITY SETPOINT ABOVE 60% RH THE CHILLED WATER VALVE (V1) SHALL MODULATE TOWARD THE OPEN POSITION TO MAINTAIN A TEMPERATURE SETPOINT (TS2) OF 55 DEG. F (ADJUSTABLE) AND THE ELECTRIC HEATING ELEMENT SHALL BE ACTIVATED TO MAINTAIN A TEMPERATURE SETPOINT (TS1) OF 75 DEG.. F. (ADJUSTABLE).

UPON SATISFYING THE RETURN AIR HUMIDITY SETPOINT OF 60% RH (ADJUSTABLE) THE HUMIDITY OVERRIDE MODE SHALL END AND SHALL NOT BE ALLOWED TO RESTART FOR 15 MINUTES (ADJUSTABLE).

AHU-1 & 3 AIR HANDLER SCHEMATIC

N.T.S.

CITY OF TAMPA
CONTRACT ADMINISTRATION DEPARTMENT
PLANNING AND DESIGN DIVISION

306 E. JACKSON STREET 4 NORTH
TAMPA, FLORIDA 33602
p: 813. 274. 8456 - f: 813. 274. 8080
url: www.tampagov.net

James E. Jackson, Jr. AIA, NOMA
City Architect
Edward D. Rice, AIA
Project Architect
Kevin L. Henika, AIA
Project Architect
Thomas A. Hester, Sr., AIA, NOMA
Project Architect
David R. Pagitt
Supervisor, Architectural Drafting
Kinsey C. Tillman
Drafting Technician
Jerry P. Sanders
Drafting Technician
Byron K. Thomas, LEED AP
Drafting Technician

MEP CONSULTANT
GRINER ENGINEERING, INC.
1628 1st. AVENUE NORTH
ST. PETERSBURG, FL 33713

STRUCTURAL CONSULTANT
BILLER REINHART
STRUCTURAL GROUP, INC.
4014 GUNN HWY. SUITE 248
TAMPA, FL 33713

CIVIL CONSULTANT
B M CIVIL LLC
12315 WYCLIFF PLACE
TAMPA, FL 33626

LANDSCAPE CONSULTANT
DAVID CONNER & ASSOCIATES
1509 W. SWANN AVENUE,SUITE 255
TAMPA, FL 33606

FIRE STATION 23
20770 TROUT CREEK DR.
TAMPA, FL 33647

DPW FILE NUMBER

DPW NUMBER
17-C-00037

ISSUE DATE
07-28-2017

DRAWN BY

REVISIONS
△
△
△

SEAL

Joseph H. Griner III, P.E. FL. 39491

SCALE: N.T.S

MECHANICAL DETAILS

GRINER
GRINER ENGINEERING, INC.
1628 First Avenue North
St. Petersburg, Florida 33713
Phone: (727)-822-2335
Fax: (727)-821-3361
Certificate of Authorization #3173

Date	06-15-2017
Drawn	JL
Designed	JL
EOR	JHG
Job no.	17049

SHEET NUMBER

M-6.3

X OF X

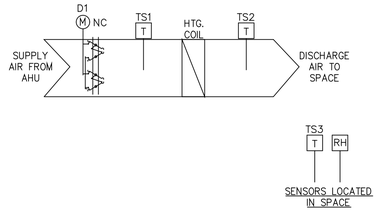

CONTROL POINT MATRIX

	ANALOG INPUT				ANALOG OUTPUT			DIGITAL INPUT					DIGITAL OUTPUT					SYSTEM POINTS			
	TEMPERATURE	HUMIDITY	SETPOINT ADJUSTMENT	---	HEATING ELEMENT	DAMPER POSITION	---	---	---	---	---	---	---	---	---	---	---	ALARM	FAILURE	HIGH/LOW LIMIT	---
VAV DAMPER (TS1)	X					X												X	X	X	
HEATING COIL (TS2)	X				X													X		X	
CONDITIONED SPACE (TS3)	X	X	X															X		X	

SEQUENCE OF OPERATION:

THE VARIABLE AIR VOLUME SINGLE DUCT TERMINAL UNIT SHALL BE CONTROLLED BASED ON AN 7-DAY TIME SCHEDULE WITH OCCUPIED AND UNOCCUPIED MODES OR TEMPERATURE/HUMIDITY OVERRIDE.

OCCUPIED MODE:

THE VAV AIR DAMPER (D1) SHALL MODULATE TOWARD THE OPEN POSITION TO MAINTAIN A SPACE TEMPERATURE SETPOINT (TS3) OF 75 DEG.. F (ADJUSTABLE). WHEN SPACE TEMPERATURE SETPOINT (TS3) DROPS BELOW 74 DEG.. F. THE VAV AIR DAMPER (D1) SHALL BE COMMANDED TO MODULATE TOWARDS THE CLOSED POSITION. UPON A FURTHER DROP IN SPACE TEMPERATURE, THE ELECTRIC HEATING ELEMENT SHALL BE ACTIVATED TO MAINTAIN A SPACE HEATING TEMPERATURE SETPOINT (TS3) OF 70 DEG. F. (ADJUSTABLE).

HUMIDITY OVERRIDE MODE:

UPON A RISE IN SPACE HUMIDITY SETPOINT ABOVE 60% RH THE VAV AIR DAMPER (D1) SHALL MODULATE TOWARD THE OPEN POSITION TO MAINTAIN A DISCHARGE AIR TEMPERATURE SETPOINT (TS2) OF 55 DEG. F (ADJUSTABLE) AND THE ELECTRIC HEATING ELEMENT SHALL BE ACTIVATED TO MAINTAIN A SPACE TEMPERATURE SETPOINT (TS3) OF 75 DEG.. F OCCUPIED OR 80 DEG., F UNOCCUPIED. (ADJUSTABLE).

UPON SATISFYING THE SPACE AIR HUMIDITY SETPOINT OF 60% RH (ADJUSTABLE) THE HUMIDITY OVERRIDE MODE SHALL END AND SHALL NOT BE ALLOWED TO RESTART FOR 15 MINUTES (ADJUSTABLE).

VAV BOX w/ELECTRIC COIL SCHEMATIC

N.T.S.

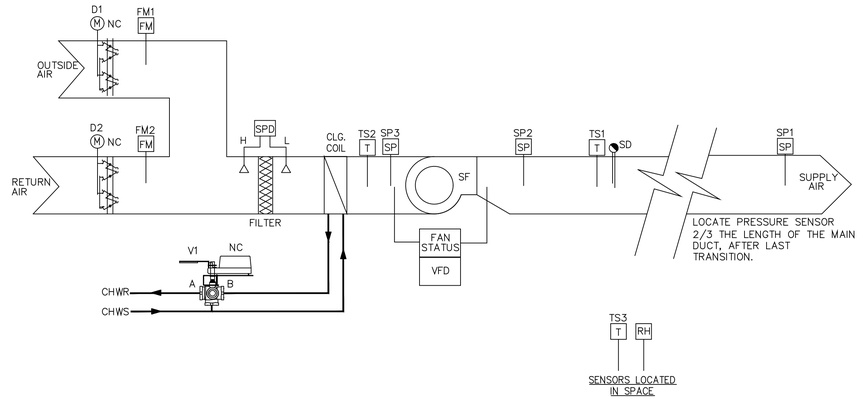

CONTROL POINT MATRIX

	ANALOG INPUT					ANALOG OUTPUT			DIGITAL INPUT					DIGITAL OUTPUT				SYSTEM POINTS			
	AIR FLOW VOLUME	TEMPERATURE	HUMIDITY	FILTER STATIC PRESSURE DIFFERENTIAL	STATIC PRESSURE	DAMPER POSITION	VALVE POSITION	FAN SPEED	STATUS	---	---	---	---	---	---	---	---	ALARM	FAILURE	HIGH/LOW LIMIT	---
OUTSIDE AIR DAMPER (D1)						X												X	X		
FLOW METER (FM1)	X																	X			
RETURN AIR DAMPER (D2)						X												X	X		
FLOW METER (FM2)	X																	X			
AIR FILTERS				X														X		X	
COOLING COIL (TS2)		X					X											X		X	
LOW STATIC PRESSURE SENSOR (SP3)																		X			
SUPPLY FAN								X	X									X	X		
HIGH STATIC PRESSURE SENSOR (SP2)																		X			
SUPPLY AIR (TS1)		X																X		X	
SMOKE DETECTOR																		X			
STATIC PRESSURE SENSOR (SP1)					X													X		X	

SEQUENCE OF OPERATION:

THE AIR HANDLER SUPPLY FAN SHALL BE COMMANDED TO INCREASE/DECREASE FAN SPEED BASED ON A STATIC PRESSURE SENSOR (SP1). WHEN THE STATIC PRESSURE SENSOR (SP1) MEASURES A STATIC PRESSURE LESS THAN 1 INCH WATER PRESSURE (ADJUSTABLE) THE SUPPLY FAN SHALL INCREASE SPEED. WHEN THE STATIC PRESSURE SENSOR (SP1) MEASURES A STATIC PRESSURE GREATER THAN 1 INCH WATER PRESSURE (ADJUSTABLE) THE SUPPLY FAN SHALL DECREASE SPEED.

WITH THE SUPPLY FAN ACTIVE AT ANY SPEED THE OUTSIDE AIR AND RETURN AIR DAMPERS SHALL BE MODULATED TO MAINTAIN AN OUTSIDE AIR VOLUME OF 475 CFM (ADJUSTABLE).

UPON A CALL FOR COOLING FROM ANY OF THE SPACES OR VAV BOXES IN HUMIDITY OVERRIDE MODE THE RETURN AIR COIL CHILLED WATER VALVE (V1) SHALL MODULATE TO MAINTAIN A RETURN AIR COOLING TEMPERATURE SETPOINT (TS2) OF 55 DEG.. F (ADJUSTABLE).

AHU-2 AIR HANDLER w/VFD SCHEMATIC

N.T.S.

CITY OF TAMPA
CONTRACT ADMINISTRATION DEPARTMENT
PLANNING AND DESIGN DIVISION

306 E. JACKSON STREET 4 NORTH
TAMPA, FLORIDA 33602
p: 813. 274. 8456 - f: 813. 274. 8080
url: www.tampagov.net

James E. Jackson, Jr. AIA, NOMA
City Architect
Edward D. Rice, AIA
Project Architect
Kevin L. Henika, AIA
Project Architect
Thomas A. Hester, Sr., AIA, NOMA
Project Architect
David R. Pagitt
Supervisor, Architectural Drafting
Kinsey C. Tillman
Drafting Technician
Jerry P. Sanders
Drafting Technician
Byron K. Thomas, LEED AP
Drafting Technician

MEP CONSULTANT
GRINER ENGINEERING, INC.
1628 1st. AVENUE NORTH
ST. PETERSBURG, FL 33713

STRUCTURAL CONSULTANT
BILLER REINHART
STRUCTURAL GROUP, INC.
4014 GUNN HWY. SUITE 248
TAMPA, FL 33713

CIVIL CONSULTANT
B M CIVIL LLC
12315 WYCLIFF PLACE
TAMPA, FL 33626

LANDSCAPE CONSULTANT
DAVID CONNER & ASSOCIATES
1809 W. SWANN AVENUE,SUITE 255
TAMPA, FL 33606

FIRE STATION 23
20770 TROUT CREEK DR.
TAMPA, FL 33647

DPW FILE NUMBER

DPW NUMBER
17-C-00037

ISSUE DATE
07-28-2017

DRAWN BY

REVISIONS

SEAL

Joseph H. Griner III, P.E. FL. 39491

SCALE: N.T.S

MECHANICAL DETAILS

GRINER
GRINER ENGINEERING, INC.
1628 First Avenue North
St. Petersburg, Florida 33713
Phone: (727)-822-2335
Fax: (727)-821-3361
Certificate of Authorization #3173

Date	06-15-2017
Drawn	JL
Designed	JL
EOR	JHG
Job no.	17049

SHEET NUMBER
M-6.4
X OF X

MECHANICAL SPECIFICATION

SECTION 23 05 00

COMMON REQUIREMENTS FOR MECHANICAL WORK:

1.0 GENERAL

1.01 SCOPE OF DIVISION: WORK SHALL INCLUDE ALL MATERIALS, EQUIPMENT, AND LABOR NECESSARY FOR A COMPLETE AND PROPERLY FUNCTIONING MECHANICAL INSTALLATION IN ACCORDANCE WITH REQUIREMENTS OF; THE FLORIDA BUILDING CODE 2014 – BUILDING AND MECHANICAL CODE AND NATIONAL FIRE PROTECTION ASSOCIATION (NFPA).

1.02 DRAWINGS: ARCHITECTURAL AND STRUCTURAL DRAWINGS TAKE PRECEDENCE OVER MECHANICAL DRAWINGS WITH REFERENCE TO THE BUILDING CONSTRUCTION. MECHANICAL DRAWINGS ARE DIAGRAMMATIC AND INDICATE THE GENERAL ARRANGEMENT AND EXTENT OF WORK. EXACT LOCATIONS AND ARRANGEMENTS OF MATERIALS AND EQUIPMENT SHALL BE DETERMINED, WITH THE APPROVAL OF THE ENGINEER, AS WORK PROGRESSES TO CONFORM IN THE BEST POSSIBLE MANNER WITH THE SURROUNDINGS AND WITH THE ADJOINING WORK OF OTHER TRADES.

1.03 COORDINATION OF WORK: COORDINATE ALL WORK, PRIOR TO INSTALLATION, WITH WORK OF OTHER TRADES AND WITH ARCHITECTURAL AND STRUCTURAL FEATURES TO PRECLUDE INTERFERENCE'S BETWEEN THE WORK OF DIFFERENT TRADES AND TO INSURE NECESSARY CLEARANCES AT CROSSOVERS AND EQUIPMENT.

1.04 SHOP DRAWINGS: SUBMIT TO ENGINEER FOR APPROVAL, BEFORE COMMENCING WORK, SHOP DRAWINGS FOR ALL MECHANICAL MATERIALS AND EQUIPMENT TO BE PROVIDED.

A. PRESENT DATA IN DETAIL EQUAL TO OR GREATER THAN THAT GIVEN IN ITEM SPECIFICATIONS AND INCLUDE ALL WEIGHTS, DEFLECTIONS, SPEEDS, VELOCITIES, PRESSURE DROPS, OPERATING TEMPERATURES, OPERATING CURVES, TEMPERATURE RANGES, SOUND RATINGS, DIMENSIONS, SIZES, MANUFACTURERS' NAMES, MODEL NUMBERS, TYPES OF MATERIAL USED, OPERATING PRESSURES, FULL LOAD AMPERAGES, STARTING AMPERAGES, FOULING FACTORS, CAPACITIES, SETPOINTS, CHEMICAL COMPOSITIONS, CERTIFICATIONS AND ENDORSEMENTS, OPERATING VOLTAGES, THICKNESSES, GAUGES AND ALL OTHER RELATED.

1.05 RECORD DRAWINGS:

A. MAINTAIN ONE EXTRA SET OF BLACK LINE, WHITE PRINT DRAWINGS FOR USE AS RECORD DRAWINGS. RECORDS SHALL BE KEPT DAILY, USING COLORED PENCIL. AS THE WORK IS COMPLETED, RELEVANT INFORMATION SHALL BE TRANSFERRED TO A REPRODUCIBLE SET, AND COPIES MADE SHALL BE GIVEN TO THE ENGINEER.

1.06 FEES AND PERMIT:

A. THE CONTRACTOR SHALL OBTAIN ALL PERMITS, INSPECTIONS, AND APPROVALS AS REQUIRED BY ALL AUTHORITIES HAVING JURISDICTION

2.0 PRODUCTS

2.01 GENERAL:

A. ALL MATERIALS AND EQUIPMENT SHALL BE NEW AND WITHOUT BLEMISH OR DEFECT.

B. EQUIPMENT AND MATERIALS SHALL BE PRODUCTS WHICH WILL MEET WITH THE ACCEPTANCE OF THE AGENCY INSPECTING THE WORK. WHERE ACCEPTANCE IS CONTINGENT UPON HAVING THE PRODUCTS EXAMINED, TESTED, AND CERTIFIED BY UNDERWRITERS OR OTHER RECOGNIZED TESTING LABORATORY, THE PRODUCT SHALL BE SO EXAMINED, TESTED, AND CERTIFIED.

2.02 MOTORS: UNLESS SPECIFICALLY SPECIFIED OTHERWISE IN THE SECTION COVERING THE DRIVEN EQUIPMENT (OR THE EQUIPMENT DRIVES), MOTORS SHALL COMPLY WITH THE FOLLOWING:

A. THREE PHASE: NEMA DESIGN B, THREE–PHASE, SQUIRREL CAGE INDUCTION TYPE DESIGNED FOR 1800 RPM SYNCHRONOUS SPEED FOR OPERATION IN 40 DEGREE C AMBIENT AT 1.15 SERVICE FACTOR AT CONSTANT SPEED ON THE SCHEDULED VOLTAGE. MOTORS SHALL BE INSULATED WITH CLASS B INSULATION MATERIAL AND SHALL BE CAST IRON, DRIP PROOF, HORIZONTAL FOOT MOUNTED TYPE WITH BALL BEARINGS. TWO SPEED MOTORS SHALL BE PROVIDED AS SCHEDULED AND SHALL BE TWO WINDING TYPE.

B. SCHEDULED HORSEPOWER: THE HORSEPOWER SCHEDULED OR SPECIFIED ARE THOSE NOMINAL SIZES ESTIMATED TO BE REQUIRED BY THE EQUIPMENT WHEN OPERATING AT SPECIFIED DUTIES AND EFFICIENCIES. IF THE ACTUAL HORSEPOWER FOR THE EQUIPMENT FURNISHED DIFFERS FROM THAT SPECIFIED OR SHOWN ON THE DRAWINGS, IT SHALL BE THE CONTRACTOR'S RESPONSIBILITY TO INSURE THAT PROPER SIZE FEEDERS, BREAKERS, STARTERS, ETC. ARE PROVIDED AT NO CHANGE IN CONTRACT PRICE.

SECTION 23 05 03

PIPES AND TUBES FOR HVAC PIPING AND EQUIPMENT:

1.0 GENERAL

1.01 SCOPE: PROVIDE CONDENSATE DRAIN PIPING FROM COOLING COIL DRAIN PANS.

2.0 PRODUCTS

2.01 PIPE: PVC, SCHEDULE 40; ASTM D2665.

2.02 FITTINGS: SOLVENT WELD SOCKET TYPE PVC, STANDARD WEIGHT; ASTM 2466.

2.03 SOLDER: AS RECOMMENDED MY PIPE MANUFACTURER.

3.0 EXECUTION

3.01 GENERAL: PIPING SHALL BE SLOPED UNIFORMLY TOWARD DRAIN, AND PROVIDED WITH TRAP SEAL HAVING A DEPTH, IN INCHES, EQUIVALENT TO THE TOTAL STATIC PRESSURE OF THE RESPECTIVE FAN SYSTEM. TRAPS SHALL BE ASSEMBLED USING ELBOWS AND TEES WITH THREADED PLUGS TO PERMIT CLEANING OF TRAP AND DRAIN LINE. PIPING SHALL BE INSTALLED IN A NEAT AND WORKMANLIKE MANNER AND SHALL BE NOT SMALLER THAN FULL SIZE OF THE EQUIPMENT DRAIN CONNECTION OR THREE–QUARTERS INCH (3/4"), WHICHEVER IS LARGER.

SECTION 23 05 53

INSTRUCTIONS AND MAINTENANCE MANUALS:

1.0 GENERAL:

1.01 PROVIDE COMPLETE WRITTEN AND VERBAL OPERATING AND MAINTENANCE INSTRUCTION TO THE OWNER FOR ALL MECHANICAL SYSTEMS.

2.0 DOCUMENTATION:

2.01 PROVIDE TWO (2) INSTRUCTIONS AND MAINTENANCE MANUALS, EACH COMPLETE AS FOLLOWS:

A. HARDBACK THREE RING LOOSE–LEAF BINDERS.

B. TITLE SHEET WITH JOB NAME, CONTRACTOR'S SUBCONTRACTOR'S CONTROL SUBCONTRACTOR AND RELATED CONTRACTOR'S OR MATERIAL SUPPLIERS NAMES, ADDRESSES AND PHONE NUMBERS.

C. INDEX OF CONTENTS.

D. A SIGNED COPY OF ACKNOWLEDGMENT OF INSTRUCTIONS TO THE OWNER OR HIS AUTHORIZED REPRESENTATIVE. TWO ADDITIONAL COPIES OF THE SIGNED ACKNOWLEDGMENT SHALL BE SENT DIRECTLY TO THE ENGINEER AS SOON AS POSSIBLE AFTER RECEIPT.

E. TYPEWRITTEN OPERATING INSTRUCTIONS FOR THE OWNER'S PERSONNEL DESCRIBING THE FOLLOWING FOR EACH PIECE OF EQUIPMENT AND SYSTEMS:

1. HOW TO START AND STOP EACH PIECE OF EQUIPMENT.
2. HOW TO SET EQUIPMENT AND SYSTEMS FOR NORMAL OPERATION.
3. NORMAL RESTARTING PROCEDURES BEFORE CONTACTING THE SERVICE CONTRACTOR.
4. COMPLETE DESCRIPTION OF FUNCTIONS AND OPERATIONS OF EACH PIECE OF EQUIPMENT INCLUDING DESCRIPTION OF HOW EQUIPMENT OPERATES IN CONJUNCTION WITH AUTOMATIC CONTROL SYSTEMS.
5. INSTRUCTIONS FOR CLEANING, OILING, GREASING, FUELING AND SIMILAR TASKS.

SECTION 23 05 48

VIBRATION CONTROLS FOR HVAC PIPING AND EQUIPMENT

PART 1 GENERAL

1.01 SUMMARY

A. SECTION INCLUDES:
1. VIBRATION ISOLATORS.

1.02 SYSTEM DESCRIPTION

A. PROVIDE VIBRATION ISOLATION ON MOTOR DRIVEN EQUIPMENT OVER 0.5 HP, PLUS CONNECTED PIPING AND DUCTWORK

1.03 SUBMITTALS

A. PRODUCT DATA: SUBMIT SCHEDULE OF VIBRATION ISOLATOR TYPE.
B. MANUFACTURER'S INSTALLATION INSTRUCTIONS: SUBMIT SPECIAL PROCEEDURES AND SETTING DIMENSIONS.

PART 2 PRODUCTS

2.01 VIBRATION ISOLATORS

A. MANUFACTURERS:
1. MASON INDUSTRIES
2. KINETICS

B. SPRING HANGER:
1. SPRING ISOLATORS:
A. FURNISH HOT DIPPED GALVANIZED HOUSINGS AND NEOPRENE COATED SPRINGS.
B. COLOR CODE: COLOR CODE SPRINGS FOR LOAD CARRYING CAPACITY.
2. SPRINGS: MINIMUM HORIZONTAL STIFFNESS EQUAL TO 75 PERCENT VERTICAL STIFFNESS, WITH WORKING DEFLECTION BETWEEN 0.3 AND 0.6 OF MAXIMUM DEFLECTION.
3. HOUSINGS: INCORPORATE NEOPRENE ISOLATION PAD MEETING REQUIREMENTS FOR NEOPRENE PAD ISOLATORS RUBBER HANGER WITH THREAD INSERT.
4. MISALIGNMENT: CAPABLE OF 20 DEGREE HANGER ROD MISALIGNMENT.

C. NEOPRENE PAD ISOLATORS:
1. RUBBER OR NEOPRENE–WAFFLE PADS.
A. 30 DUROMETER.
B. MINIMUM 1/2 INCH THICK.
C. MAXIMUM LOADING 40PSI.
D. HEIGHT OF RIBS: NOT TO EXCEED 0.7 TIMES WIDTH.
2. CONFIGURATION: SINGLE LAYER, 1/2 INCH THICK WAFFLE PADS BONDED EACH SIDE OF 1/4 INCH THICK STEEL PLATE.

PART 3 EXECUTION

3.01 EXAMINATION

A. VERIFY EQUIPMENT, DUCTWORK, AND PIPING IS INSTALLED BEFORE WORK ON THIS SECTION IS STARTED.

3.02 INSTALLATION

A. ADJUST EQUIPMENT LEVEL.

B. INSTALL SPRING HANGERS WITHOUT BINDING.

C. ON CLOSED SPRING ISOLATORS, ADJUST SO SIDE STABILIZERSARE CLEAR UNDER NORMAL OPERATING CONDITIONS.

D. PRIOR TO MAKING PIPING CONNECTIONS TO EQUIPMENT WITH OPERATING WEIGHTS SUBSTANTIALLY DIFFERENT FROM INSTALLED WEIGHTS, BLOCK UP EQUIPMEN WITH TEMPORARY SHIMS TO FINAL HEIGHT. WHEN FULL LOAD IS APPLIED, ADJUST ISOLATORS TO ALLOW SHIM REMOVAL.

E. SUPPORT PIPING CONNECTIONS TO ISOLATE EQUIPMENT RESILIENTLY AS FOLLOWS:
1. UP TO 4 INCH DIAMETER: FIRST THREE POINTS OF SUPPORT.
2. SELECT THREE HANGERS CLOSEST TO VIBRATION SOURCE FOR MINIMUM 1.0 INCH STATIC DEFLECTION OR STATIC DEFLECTION OF ISOLATED EQUIPMENT. SELECT REMAINING ISOLATORS FOR MINIMUM 1.0 INCH STATIC DEFLECTION OR 1/2 STATIC DEFLECTION OF ISOLATED EQUIPMENT.

3.03 ISOLATOR SCHEDULE

ITEM	ISOLATOR TYPE
CHILLED WATER PIPING	SPRING HANGERS
HEATING HOT WATER PIPE	SPRING HANGERS
PUMPS	NEOPRENE PAD ISOLATORS

SECTION 23 05 93

TESTING, ADJUSTING, AND BALANCING

1.0 GENERAL

1.1 SUMMARY

A. SECTION INCLUDES:
1. TESTING ADJUSTING, AND BALANCING OF AIR SYSTEMS.
2. TESTING ADJUSTING, AND BALANCING OF HYDRONIC SYSTEMS.
3. MEASUREMENT OF FINAL OPERATING CONDITION OF HVAC SYSTEMS.

1.2 REFERENCES

A. ASSOCIATED AIR BALANCE COUNCIL:
1. AABC MN–1 – NATIONAL STANDARDS FOR TESTING AND BALANCING HEATING, VENTILATING, AND AIR CONDITIONING SYSTEMS.

B. AMERICAN SOCIETY OF HEATING, REFRIGERATING AND AIR–CONDITIONING ENGINEERS:
1. ASHRAE 111 – PRACTICES FOR MEASUREMENT, TESTING, ADJUSTING AND BALANCING OF BUILDING HEATING, VENTILATION, AIR–CONDITIONING AND REFRIGERATION SYSTEMS.

C. NATURAL ENVIRONMENTAL BALANCING BUREAU:
1. NEBB – PROCEDURAL STANDARDS FOR TESTING, ADJUSTING, AND BALANCING OF ENVIRONMENTAL SYSTEMS.

1.3 CLOSEOUT SUBMITTALS

A. PROJECT RECORD DOCUMENTS: RECORD ACTUAL LOCATIONS OF BALANCING VALVES AND ROUGH SETTING.

B. OPERATION AND MAINTENANCE DATA: FURNISH FINAL COPY OF TESTING, ADJUSTING, AND BALANCING REPORT INCLUSION IN OPERATING AND MAINTENANCE MANUALS.

1.4 QUALITY ASSURANCE

A. PERFORM WORK IN ACCORDANCE WITH AABC MN–1 NATIONAL STANDARDS FOR FIELD MEASUREMENT AND INSTRUMENTATION, TOTAL SYSTEM BALANCE.

B. GUARANTEE: THE TEST AND BALANCE AGENCY SHALL INCLUDE A WARRANTY PERIOD OF NINETY (90) DAYS AFTER COMPLETION AND ACCEPTABLE OF TEST AND BALANCE WORK. DURING THE WARRANTY PERIOD, THE ARCHITECT MAY REQUEST A RE–CHECK OR RE–SETTING OF ANY OUTLET AND SUPPLY FAN. THE TEST AND BALANCE AGENCY SHALL PROVIDE TECHNICIANS, INSTRUMENTS, AND TOOLS TO ASSIST THE ARCHITECT IN CONDUCTING ANY TEST THAT HE MAY REQUIRE DURING THIS TIME. THE FOREGOING SHALL BE IN ADDITION TO THE A.A.M.C. NATIONAL PROJECT CERTIFICATION PERFORMANCE GUARANTY WHICH SHALL BE FORWARDED WITH SHOP DRAWING DATA SPECIFIED HEREINBEFORE.

1.5 QUALIFICATIONS

A. AGENCY: COMPANY SPECIALIZING IN TESTING, ADJUSTING, AND BALANCING OF SYSTEMS SPECIFIED IN THIS SECTION WITH MINIMUM THREE YEARS DOCUMENTED EXPERIENCE AND CERTIFIED BY AABC OR NEBB.

B. PERFORM WORK UNDER SUPERVISION OF AABC CERTIFIED TEST AND BALANCE ENGINEER.

A. ACCEPTABLE AGENCIES: TEST PHOENIX AGENCY, SOUTHERN INDEPENDENT TESTING AGENCY INC. OR OTHER AGENCY APPROVED BY ENGINEER.

2.0 PRODUCTS

A. NATIONAL STANDARDS: TESTING AND BALANCING SHALL BE PERFORMED IN ACCORDANCE WITH A.A.B.C. NATIONAL STANDARDS.

3.0 EXECUTION

3.1 SCHEDULES

A. EQUIPMENT REQUIRING TESTING, ADJUSTING, AND BALANCING:
1. AIR COILS.
2. AIR HANDLING UNITS.
3. AIR TERMINAL UNITS.
4. FANS.
5. AIR INLETS AND OUTLETS.

B. REPORT FORMS

1. TITLE PAGE:
A. NAME OF TESTING, ADJUSTING, AND BALANCING AGENCY
B. ADDRESS OF TESTING, ADJUSTING, AND BALANCING AGENCY
C. TELEPHONE AND FACSIMILE NUMBERS OF TESTING, ADJUSTING, AND BALANCING AGENCY
D. PROJECT NAME
E. PROJECT LOCATION
F. PROJECT ARCHITECT
G. PROJECT ENGINEER
H. PROJECT CONTRACTOR
I. REPORT DATE

2. SUMMARY COMMENTS:
A. DESIGN VERSUS FINAL PERFORMANCE
B. NOTABLE CHARACTERISTICS OF SYSTEM
C. DESCRIPTION OF SYSTEMS OPERATION SEQUENCE
D. NOMENCLATURE USED THROUGHOUT REPORT
F. TEST CONDITIONS

3. INSTRUMENT LIST:
A. INSTRUMENT
B. MANUFACTURER
C. MODEL NUMBER
D. SERIAL NUMBER
E. RANGE
F. CALIBRATION DATE

4. ELECTRIC MOTORS:
A. MANUFACTURER
B. MODEL/FRAME
C. HP/BHP AND KW
D. PHASE, VOLTAGE, AMPERAGE; NAMEPLATE, ACTUAL, NO LOAD
E. RPM
F. SERVICE FACTOR
G. STARTER SIZE, RATING, HEATER ELEMENTS
H. SHEAVE MAKE/SIZE/BORE

5. V–BELT DRIVE:
A. IDENTIFICATION/LOCATION
B. REQUIRED DRIVEN RPM
C. DRIVEN SHEAVE, DIAMETER AND RPM
D. BELT, SIZE AND QUANTITY
E. MOTOR SHEAVE DIAMETER AND RPM
F. CENTER TO CENTER DISTANCE, MAXIMUM, MINIMUM, AND ACTUAL

6. COOLING COIL DATA:
A. IDENTIFICATION/NUMBER
B. LOCATION
C. SERVICE
D. MANUFACTURER
E. AIR FLOW, DESIGN AND ACTUAL
F. ENTERING AIR DB TEMPERATURE, DESIGN AND ACTUAL
G. ENTERING AIR WB TEMPERATURE, DESIGN AND ACTUAL
H. LEAVING AIR DB TEMPERATURE, DESIGN AND ACTUAL
I. LEAVING AIR WB TEMPERATURE, DESIGN AND ACTUAL
J. WATER FLOW, DESIGN AND ACTUAL
K. WATER PRESSURE DROP, DESIGN AND ACTUAL
L. ENTERING WATER TEMPERATURE, DESIGN AND ACTUAL
M. LEAVING WATER TEMPERATURE, DESIGN AND ACTUAL
N. AIR PRESSURE DROP, DESIGN AND ACTUAL

7. AIR MOVING EQUIPMENT:
A. LOCATION
B. MANUFACTURER
C. MODEL NUMBER
D. SERIAL NUMBER
E. ARRANGEMENT/CLASS/DISCHARGE
F. AIR FLOW, SPECIFIED AND ACTUAL
G. RETURN AIR FLOW, SPECIFIED AND ACTUAL
H. OUTSIDE AIR FLOW, SPECIFIED AND ACTUAL
I. TOTAL STATIC PRESSURE (TOTAL EXTERNAL), SPECIFIED AND ACTUAL
J. INLET PRESSURE
K. DISCHARGE PRESSURE
L. SHEAVE MAKE/SIZE/BORE
M. NUMBER OF BELTS/MAKE/SIZE
N. FAN RPM

8. AIR DISTRIBUTION TEST SHEET:
A. AIR TERMINAL NUMBER
B. ROOM NUMBER/LOCATION
C. TERMINAL TYPE
D. TERMINAL SIZE
E. AREA FACTOR
F. DESIGN VELOCITY
G. DESIGN AIR FLOW
H. TEST (FINAL) VELOCITY
I. TEST (FINAL) AIR FLOW
J. PERCENT OF DESIGN AIR FLOW

SECTION 23 07 00

INSULATION: THERMAL

1.0 GENERAL

1.01 SCOPE: PROVIDE PLANT, LABOR, AND MATERIALS TO INSULATE EQUIPMENT, PIPING AND MISCELLANEOUS ITEMS IN THE PIPING AND DUCT SYSTEMS AS INDICATED ON THE DRAWINGS AND SPECIFIED HEREIN.

1.02 NFPA 90A: ALL MATERIALS AND ADHESIVES USED IN OR ON DUCTWORK SHALL CONFORM TO THE REQUIREMENTS OF NFPA 90A AS TO FLAME SPREAD AND SMOKE DEVELOPED RATINGS.

2.0 PRODUCTS

2.01 INSULATION MATERIALS, GENERAL: INSULATION MATERIALS SHALL INCLUDE, BUT ARE NOT NECESSARILY LIMITED TO, THE FOLLOWING:

2.01 DUCTWORK INSULATION MATERIALS:

A. FIBERGLASS BLANKET INSULATION: FIBERGLASS DUCT INSULATION, ONE AND ONE–HALF (1–1/2) INCH THICK, ONE (1) POUND PER CUBIC FOOT DENSITY WITH REINFORCED FOIL SCRIM KRAFT VAPOR BARRIER, MINIMUM THERMAL RESISTANCE OF R–6.

B. FIBERGLASS RIGID BOARD INSULATION: FIBERGLASS DUCT BOARD, STIFFNESS OF 800 EI, HEAVY DUTY FOIL FACING ON EXPOSED SURFACE CONSISTING OF FOIL, FIBERGLASS SCRIM REINFORCEMENT AND TWO LAYERS OF KRAFT PAPER IN A OIL–KRAFT–SCRIM–KRAFT PATTERN, WITH A THERMAL RESISTANCE OF 6.0.

2.02 PIPE INSULATION MATERIALS:

A. CELLULAR GLASS: ASTM C552; K FACTOR OF 0.29 AT 75 DEGREES F (KSI VALUE OF 0.047 AT 24 DEGREES C); 8.0 LB/CU FT (128 KG/CU M) DENSITY.

B. CELLULAR FOAM: ASTM C534; FLEXIBLE, CELLULAR ELASTOMERIC, MOLDED.
1. K (KSI) VALUE: 0.27 AT 75 DEGREES F.
2. MAXIMUM SERVICE TEMPERATURE: 220 DEGREES F.
3. CONNECTION: WATERPROOF VAPOR RETARDER ADHESIVE.

C. GLASS FIBER: ASTM C547; MINERAL FIBER PIPE INSULATION.
1. K (KSI) VALUE: 0.27 AT 150 DEGREES F.
2. MAXIMUM SERVICE TEMPERATURE: 220 DEGREES F.
3. CONNECTION: WATERPROOF VAPOR RETARDER ADHESIVE.

D. JACKETS:

A. PVC PLASTIC PIPE JACKET:
1. PRODUCT DESCRIPTION: ASTM D1784, ONE PIECE MOLDED TYPE FITTING COVERS AND SHEET MATERIAL, OFF–WHITE COLOR.
3. THICKNESS: 10 MIL.
4. CONNECTIONS: TACKS.

2.03 ADHESIVES, MASTICS, SEALANTS: ADHESIVES, MASTICS, SEALANTS SHALL INCLUDE, BUT ARE NOT NECESSARILY LIMITED TO THE FOLLOWING:

A. GLASS FIBER INSULATION (FABRIC AND MASTIC):
1. ADHESIVE: FOSTER 85–20.

2. MASTIC: FOSTER 35–00.

3.0 EXECUTION

3.01 DUCTWORK:

A. INTERIOR CONCEALED: DUCTWORK SHALL BE INSULATED EXTERNALLY WITH FIBERGLASS BLANKET WRAP. OVERLAP INTERNAL INSULATION A MINIMUM OF ONE FOOT BEYOND ANY SUCH INTERNAL INSULATION, AND VAPOR SEAL RAW END AS SPECIFIED HEREIN FOR JOINTS. ADHERE DUCT INSULATION USING ADHESIVE APPLIED IN ACCORDANCE WITH THE MANUFACTURER'S RECOMMENDATIONS. WHERE DUCT WIDTH EXCEEDS TWENTY–FOUR INCHES (24"), THE INSULATION SHALL BE ADDITIONALLY SECURED TO THE BOTTOM OF THE DUCT USING MECHANICAL FASTENERS SPACED ONE FOOT (1') ON CENTER. INSULATION SHALL BE APPLIED WITH EDGES TIGHTLY BUTTED, AND ALL JOINTS AND BREAKS IN THE VAPOR BARRIER SEALED USING GLASS FABRIC AND MASTIC APPLIED IN CONFORMANCE WITH MANUFACTURER'S RECOMMENDATIONS.

B. INTERIOR EXPOSED: DUCTWORK SHALL BE INSULATED EXTERNALLY WITH FIBERGLASS DUCTBOARD INSULATION. INSULATION SHALL BE APPLIED WITH EDGES TIGHTLY BUTTED, AND ALL JOINTS AND BREAKS IN THE VAPOR BARRIER SEALED USING GLASS FABRIC AND MASTIC APPLIED IN CONFORMANCE WITH MANUFACTURER'S RECOMMENDATIONS.

GRINER ENGINEERING, INC.
1628 First Avenue North
St. Petersburg, Florida 33713
Phone: (727)-822-2335
Fax: (727)-821-3361
Certificate of Authorization #3173

Date	06-15-2017
Drawn	JL
Designed	JL
EOR	JHG
Job no.	17049

CITY OF TAMPA
CONTRACT ADMINISTRATION DEPARTMENT
PLANNING AND DESIGN DIVISION
306 E. JACKSON STREET 4 NORTH
TAMPA, FLORIDA 33602
p: 813. 274. 8456 – f: 813. 274. 8080
url: www.tampagov.net

James E. Jackson, Jr. AIA, NOMA
City Architect
Edward D. Rice, AIA
Project Architect
Kevin L. Henika, AIA
Project Architect
Thomas A. Hester, Sr., AIA, NOMA
Project Architect
David R. Pagitt
Supervisor, Architectural Drafting
Kinsey C. Tillman
Drafting Technician
Jerry P. Sanders
Drafting Technician
Byron K. Thomas, LEED AP
Drafting Technician

MEP CONSULTANT
GRINER ENGINEERING, INC.
1628 1st. AVENUE NORTH
ST. PETERSBURG, FL 33713

STRUCTURAL CONSULTANT
BILLER REINHART
STRUCTURAL GROUP, INC.
4014 GUNN HWY. SUITE 248
TAMPA, FL 33713

CIVIL CONSULTANT
B M CIVIL LLC
12315 WYCLIFF PLACE
TAMPA, FL 33626

LANDSCAPE CONSULTANT
DAVID CONNER & ASSOCIATES
1809 W. SWANN AVENUE,SUITE 255
TAMPA, FL 33606

FIRE STATION 23
20770 TROUT CREEK DR.
TAMPA, FL 33647

DPW FILE NUMBER

DPW NUMBER
17–C–00037

ISSUE DATE
07–28–2017

DRAWN BY

REVISIONS

SEAL

Joseph H. Griner III, P.E. FL. 39491

SCALE: N.T.S.

MECHANICAL SPECIFICATIONS

SHEET NUMBER

M–7.0

X OF X

MECHANICAL SPECIFICATION CONTINUED

3.02 PIPING:

A. CHILLED WATER PIPING: INSULATE WITH CELLULAR GLASS INSULATION, INSULATION THICKNESS SHALL BE 2 INCHES. PROVIDE PVC JACKET FOR EXPOSED PIPING IN MECHANICAL ROOMS. PROVIDE WITH VAPOR BARRIER.

B. HOT WATER PIPING: INSULATE WITH PREFORMED FIBERGLASS PIPE INSULATION, INSULATION THICKNESS SHALL BE 2 INCHES. PROVIDE PVC JACKET FOR EXPOSED PIPING IN MECHANICAL ROOMS. PROVIDE WITH VAPOR BARRIER.

C. CONDENSATE DRAIN PIPING: INSULATE WITH CELLULAR FOAM ELASTOMERIC PIPE INSULATION, SECURED WITH ADHESIVE. INSULATION THICKNESS SHALL BE THREE QUARTER INCH (3/4").

SECTION 23 09 23

HVAC CONTROLS

1.0 – GENERAL

A. THE CONTROL SYSTEM SHALL BE TIED–IN TO THE EXISTING KMC 'TOTAL CONTROL' FRONT–END SERVER. PROVIDE GRAPHICS, TRENDING, ALARMS AND PROGRAMMING MODIFICATION CAPABILITIES FROM THE EXISTING KMC SERVER LOCATED AT DPW FACILITIES AT CLARK AVENUE AND SPRUCE STREET TO THE NEW FIR STATION.

1.01 DESCRIPTION

A. THE HVAC CONTROLS SHALL BE COMPRISED OF A NETWORK OF INTEROPERABLE, STAND–ALONE DIGITAL CONTROLLERS. B. THE SYSTEM WILL DIRECTLY CONTROL EACH PIECE OF MECHANICAL EQUIPMENT AS INDICATED IN THE SCHEMATIC DRAWINGS AND SEQUENCE OF OPERATIONS.

B. FURNISH ALL LABOR, MATERIALS, EQUIPMENT, AND SERVICE NECESSARY FOR A COMPLETE AND OPERATING (BCS), UTILIZING DIRECT DIGITAL CONTROLS AS SHOWN ON THE DRAWINGS AND AS DESCRIBED HEREIN. DRAWINGS ARE DIAGRAMMATIC ONLY.

2.0 – PRODUCTS

2.01 MANUFACTURERS
A. KMC CONTROLS.

2.02 GENERAL
A. THE CONTROL SYSTEM SHALL TIE INTO EXISTING KMC TOTAL CONTROL FRONT END SERVER. PROVIDE GRAPHICS TRENDING, ALARMS AND PROGRAMMING MODIFICATION CAPABILITIES FROM THE EXISTING KMC SERVER, LOCATED AT DPW FACILITIES AT CLARK AVE AND SPRUCE STREET TO THE FIRE STATION.
B. PROVIDE INTERFACE TO THE DIGITAL MASTER LIGHTING CONTROL PANEL.

2.03 CUSTOM APPLICATION CONTROLLERS
A. GENERAL: PROVIDE AN ADEQUATE NUMBER OF CUSTOM APPLICATION CONTROLLERS TO ACHIEVE THE PERFORMANCE SPECIFIED. EACH OF THESE PANELS SHALL MEET THE FOLLOWING REQUIREMENTS.

1. CUSTOM APPLICATION CONTROLLERS SHALL BE PROVIDED FOR AIR HANDLING UNITS. CONTROLS SHALL BE MICROPROCESSOR BASED INTEROPERABLE LONWORKS DIGITAL CONTROLLERS, PROVIDING INTEROPERABILITY WITH ALL LONMARK AND LONWORKS DEVICES THE APPLICATION CONTROL PROGRAM SHALL BE RESIDENT WITHIN THE SAME ENCLOSURE AS THE INPUT/OUTPUT CIRCUITRY, WHICH TRANSLATES THE SENSOR SIGNALS.
2. ALL INPUT/OUTPUT SIGNALS SHALL BE DIRECTLY HARDWIRED. ALL CONTROLLERS SHALL EMPLOY A UNIVERSAL INPUT CONFIGURATION THAT ALLOWS FOR FLEXIBILITY IN APPLICATION RANGING FROM DRY CONTACT, RESISTIVE AND VOLTAGE/CURRENT–SOURCE INPUTS. IF UNIVERSAL POINTS ARE NOT AVAILABLE, A MINIMUM OF ONE SPARE INPUT POINT (EACH) OF THE DRY CONTACT, RESISTIVE AND ANALOG VOLTAGE/CURRENT TYPES MUST BE PROVIDED FOR EACH INPUT POINT UTILIZED. CONTROLLERS SHALL PROVIDE DIGITAL AND ANALOG OUTPUT TYPES AND QUANTITIES CONSISTENT WITH THE REQUIREMENTS OF THE APPLICATION REQUIREMENTS.
3. THE CUSTOM APPLICATION CONTROLLER SHALL HAVE SUFFICIENT MEMORY TO SUPPORT ITS OPERATING SYSTEM, DATABASE, AND PROGRAMMING REQUIREMENTS. ALL CONTROLLERS SHALL BE FULLY APPLICATION PROGRAMMABLE UTILIZING GRAPHICAL OBJECTS. ALL CONTROL SEQUENCES PROGRAMMED SHALL BE STORED IN NON–VOLATILE MEMORY, WHICH IS NOT DEPENDENT UPON THE PRESENCE OF A BATTERY, TO BE RETAINED. SYSTEMS THAT ONLY ALLOW SELECTION OF SEQUENCES FROM A LIBRARY OR TABLE ARE NOT ACCEPTABLE
4. DATA SHALL BE SHARED BETWEEN NETWORKED CUSTOM APPLICATION CONTROLLERS.
5. THE OPERATING SYSTEM OF THE CONTROLLER SHALL MANAGE THE INPUT AND OUTPUT COMMUNICATION SIGNALS TO ALLOW DISTRIBUTED CONTROLLERS TO SHARE REAL AND VIRTUAL OBJECT INFORMATION, AND ALLOW CENTRAL MONITORING AND ALARMS.
6. CONTROLLERS THAT PERFORM SCHEDULING SHALL HAVE A REAL–TIME CLOCK.
7. THE CUSTOM APPLICATION CONTROLLER SHALL CONTINUALLY CHECK THE STATUS OF ITS PROCESSOR AND MEMORY CIRCUITS. IF AN ABNORMAL OPERATION IS DETECTED, THE CONTROLLER SHALL:

A. ASSUME A PREDETERMINED FAILURE MODE.
B. GENERATE AN ALARM NOTIFICATION.
C. ENVIRONMENT: CONTROLLER HARDWARE SHALL BE SUITABLE FOR THE ANTICIPATED AMBIENT CONDITIONS.

8. CONTROLLERS USED IN CONDITIONED SPACE SHALL BE MOUNTED IN DUST–PROOF ENCLOSURES, AND SHALL BE RATED FOR OPERATION AT 0°C TO 50°C [32°F TO 120°F].

C. KEYPAD: A LOCAL KEYPAD AND DISPLAY SHALL BE PROVIDED. THE KEYPAD SHALL BE PROVIDED FOR INTERROGATING AND EDITING DATA. AN OPTIONAL SYSTEM SECURITY PASSWORD SHALL BE AVAILABLE TO PREVENT UNAUTHORIZED USE OF THE KEYPAD AND DISPLAY.

D. SERVICEABILITY: PROVIDE DIAGNOSTIC LED'S FOR POWER, COMMUNICATION, AND PROCESSOR. ALL WIRING CONNECTIONS SHALL BE MADE TO FIELD–REMOVABLE, MODULAR TERMINAL STRIPS––OR TO A TERMINATION CARD CONNECTED BY A RIBBON CABLE.

E. MEMORY: THE CUSTOM APPLICATION CONTROLLER SHALL MAINTAIN ALL BIOS AND PROGRAMMING INFORMATION IN THE EVENT OF A POWER LOSS FOR AT LEAST 72 HOURS.

F. IMMUNITY TO POWER AND NOISE: CONTROLLER SHALL BE ABLE TO OPERATE AT 90% TO 110% OF NOMINAL VOLTAGE RATING AND SHALL PERFORM AN ORDERLY SHUTDOWN BELOW 80% NOMINAL VOLTAGE. OPERATION SHALL BE PROTECTED AGAINST ELECTRICAL NOISE OF 5 TO 120 HZ AND FROM KEYED RADIOS UP TO 5 W AT FT.

2.04 AUXILIARY CONTROL DEVICES (AS SHOWN ON THE DRAWINGS)

A. MOTORIZED CONTROL DAMPERS, UNLESS OTHERWISE SPECIFIED ELSEWHERE, SHALL BE AS FOLLOWS:
1. TWO–POSITION SHUTOFF DAMPERS SHALL BE OPPOSED BLADE TYPE WITH BLADE AND SIDE SEALS.
2. DAMPER FRAMES SHALL BE 13 GAUGE GALVANIZED STEEL CHANNEL OR 1/8" EXTRUDED ALUMINUM WITH REINFORCED CORNER BRACING.
3. DAMPER BLADES SHALL NOT EXCEED 8" IN WIDTH OR 48" IN LENGTH. BLADES ARE TO BE SUITABLE FOR MEDIUM VELOCITY PERFORMANCE (2,000 FPM). BLADES SHALL BE NOT LESS THAN 16 GAUGE.
4. DAMPER SHAFT BEARINGS SHALL BE AS RECOMMENDED BY MANUFACTURER FOR APPLICATION. OILITE OR BETTER.
5. ALL BLADE EDGES AND TOP AND BOTTOM OF THE FRAME SHALL BE PROVIDED WITH REPLACEABLE BUTYL RUBBER OR NEOPRENE SEALS. SIDE SEALS SHALL BE SPRING–LOADED STAINLESS STEEL. THE BLADE SEALS SHALL PROVIDE FOR A MAXIMUM LEAKAGE RATE OF 10 CFM PER SQ. FT. AT 1000 4" W.C. DIFFERENTIAL PRESSURE. PROVIDE AIR FOIL BLADES SUITABLE FOR A WIDE–OPEN FACE VELOCITY OF 1,500 FPM.
6. INDIVIDUAL DAMPER SECTIONS SHALL NOT BE LARGER THAN 48;" X 60". PROVIDE A MINIMUM OF ONE DAMPER ACTUATOR PER SECTION.
DAMPERS SHALL HAVE EXPOSED LINKAGES.

SECTION 23 21 13

HYDRONIC PIPING

PART 1 GENERAL

1.01 SUMMARY

A. SECTION INCLUDES:
1. CHILLED WATER PIPING.
2. HOT WATER PIPING.
2. CONDENSATE DRAINS.
3. UNIONS.
4. VALVES.

1.02 SYSTEM DESCRIPTION

A. WHERE MORE THAN ONE PIPING SYSTEM MATERIAL IS SPECIFIED, PROVIDE COMPATIBLE SYSTEM COMPONENTS AND JOINTS. USE NON–CONDUCTING DIELECTRIC CONNECTIONS WHENEVER JOINTING DISSIMILAR METALS IN OPEN SYSTEMS.

B. PROVIDE UNIONS AND COUPLINGS AT LOCATIONS REQUIRING SERVICING. USE UNIONS AND COUPLINGS DOWNSTREAM OF VALVES AND AT EQUIPMENT OR APPARATUS CONNECTIONS. DO NOT USE DIRECT WELDED OR THREADED CONNECTIONS TO VALVES, EQUIPMENT OR OTHER APPARATUS.

C. USE BALL VALVES FOR SHUT–OFF AND TO ISOLATE EQUIPMENT.

D. USE 3/4 INCH BALL VALVES WITH CAP FOR DRAINS AT EQUIPMENT.

1.03 SUBMITTALS

A. PRODUCT DATA:
1. PIPING: SUBMIT DATA ON PIPE MATERIALS, FITTINGS, AND ACCESSORIES. SUBMIT MANUFACTURERS CATALOG INFORMATION.
2. VALVES: SUBMIT MANUFACTURERS CATALOG INFORMATION WITH VALVE DATA AND RATINGS FOR EACH SERVICE.

PART 2 PRODUCTS

2.01 CHILLED WATER PIPING

A. STEEL PIPE: ASTM A53/A53M, SCHEDULE 40,.
1. FITTINGS: ASME B16.3, MALLEABLE IRON OR ASTM A234/A234M, FORGED STEEL WELDING TYPE.
2. JOINTS: THREADED FOR PIPE 2 INCHES AND SMALLER; WELDED FOR PIPE 2–1/2 INCHES AND LARGER.

2.02 HOT WATER PIPING

A. COPPER PIPE: TYPE K.
1. FITTINGS: BRAZED.
2. JOINTS: BRAZED.

2.03 CONDENSATE DRAIN

A. COPPER TUBING: ASTM B88, TYPE L, HARD DRAWN.
1. FITTINGS: ASME B16.18, CAST BRASS, OR ASME B16.22 SOLDER WROUGHT COPPER.
2. JOINTS: SOLDER, LEAD FREE, 95–5 TIN–ANTIMONY, OR TIN AND SILVER, WITH MELTING RANGE 430 TO 535 DEGREES F.

2.04 UNIONS AND FLANGES

A. UNIONS FOR PIPE 2 INCHES AND SMALLER:
1. FERROUS PIPING: CLASS 150, MALLEABLE IRON, THREADED.
2. COPPER PIPING: CLASS 150, BRONZE UNIONS WITH BRAZED JOINTS.
3. DIELECTRIC CONNECTIONS: UNION WITH GALVANIZED OR PLATED STEEL THREADED END, COPPER SOLDER END, WATER IMPERVIOUS ISOLATION BARRIER.

2.05 BALL VALVES

A. 3 INCHES AND SMALLER: MSS SP 110, TWO PIECE BRONZE BODY, CHROME PLATED BRASS BALL, FULL PORT, TEFLON SEATS, BLOW–OUT PROOF STEM, SOLDER OR THREADED ENDS WITH UNION, LOCKING LEVER HANDLE WITH BALANCING STOPS.

PART 3 EXECUTION

3.01 PREPARATION

A. REAM PIPE AND TUBE ENDS. REMOVE BURRS. BEVEL PLAIN END FERROUS PIPE.

B. REMOVE SCALE AND DIRT ON INSIDE AND OUTSIDE BEFORE ASSEMBLY.

C. PREPARE PIPING CONNECTIONS TO EQUIPMENT WITH UNIONS.

3.02 INSTALLATION

A. INSTALL CHILLED WATER PIPING IN ACCORDANCE WITH ASME B31.1

B. INSTALL PIPING TO CONSERVE BUILDING SPACE, AND NOT INTERFERE WITH USE OF SPACE.

C. INSULATE PIPING.

SECTION 23 21 16

HYDRONIC PIPING SPECIALTIES

PART 1 GENERAL

1.01 SUMMARY

A. SECTION INCLUDES:
1. PRESSURE GAGES.
2. PRESSURE GAGE TAPS.
3. THERMOMETERS.
4. THERMOMETER SUPPORTS.
5. TEST PLUGS.
6. FLEXIBLE CONNECTORS.
7. DIAPHRAGM–TYPE EXPANSION TANKS.
8. AIR VENTS.
9. AIR SEPARATORS.
10. STRAINERS.
11. PUMP SUCTION FITTINGS.
12. COMBINATION PUMP DISCHARGE VALVES.

1.02 PERFORMANCE REQUIREMENTS

A. FLEXIBLE CONNECTORS: PROVIDE AT OR NEAR PUMPS.

1.03 SUBMITTALS

A. PRODUCT DATA: SUBMIT FOR MANUFACTURED PRODUCTS AND ASSEMBLIES USED IN THIS PROJECT.
1. MANUFACTURER'S DATA INDICATING USE, OPERATING RANGE, TOTAL RANGE, ACCURACY, AND LOCATION FOR MANUFACTURED COMPONENTS.
2. SUBMIT PRODUCT DESCRIPTION, MODEL, DIMENSIONS, COMPONENT SIZES, ROUGH–IN REQUIREMENTS, SERVICE SIZES, AND FINISHES.
3. SUBMIT SCHEDULE INDICATING MANUFACTURER, MODEL NUMBER, SIZE, LOCATION, RATED CAPACITY, LOAD SERVED, AND FEATURES FOR EACH PIPING SPECIALTY.

B. MANUFACTURER'S INSTALLATION INSTRUCTIONS: SUBMIT HANGING AND SUPPORT METHODS, JOINING PROCEDURES, APPLICATION, SELECTION, AND HOOKUP CONFIGURATION. INCLUDE PIPE AND ACCESSORY ELEVATIONS.

PART 2 PRODUCTS

2.01 PRESSURE GAGES

A. GAGE: ASME B40.1, WITH BOURDON TUBE, ROTARY BRASS MOVEMENT, BRASS SOCKET, FRONT CALIBRATION ADJUSTMENT, BLACK SCALE ON WHITE BACKGROUND.
1. CASE: CAST ALUMINUM BOURDON TUBE: TYPE 316 STAINLESS STEEL.
2. DIAL SIZE: 3–1/2 INCH DIAMETER.
3. MID–SCALE ACCURACY: ONE PERCENT.
4. SCALE: PSI.

2.02 PRESSURE GAGE TAPS

A. NEEDLE VALVE: BRASS 1/4 INCH NPT FOR MINIMUM 300 PSI.
B. PULSATION DAMPER: PRESSURE SNUBBER, BRASS WITH 1/4 INCH NPT CONNECTIONS.
C. SIPHON: BRASS 1/4 INCH NPT ANGLE OR STRAIGHT PATTERN.

2.03 STEM TYPE THERMOMETERS

A. THERMOMETER: ASTM E1, ADJUSTABLE ANGLE, RED APPEARING MERCURY, LENS FRONT TUBE, CAST ALUMINUM CASE WITH ENAMEL FINISH, CAST ALUMINUM ADJUSTABLE JOINT WITH POSITIVE LOCKING DEVICE.
1. SIZE: 7 INCH SCALE.
2. WINDOW: CLEAR GLASS.
3. STEM: BRASS, 3/4 INCH NPT, 3–1/2 INCH LONG.
4. ACCURACY: 2 PERCENT.
5. CALIBRATION: DEGREES F.

2.04 THERMOMETER SUPPORTS

A. SOCKET: BRASS SEPARABLE SOCKETS FOR THERMOMETER STEMS WITH OR WITHOUT EXTENSIONS.
B. FLANGE: 3 INCH OUTSIDE DIAMETER REVERSIBLE FLANGE, DESIGNED TO FASTEN TO SHEET METAL AIR DUCTS, WITH BRASS PERFORATED STEM.

2.05 TEST PLUGS

A. 1/2 INCH NPT BRASSL FITTING AND CAP FOR RECEIVING 1/8 INCH OUTSIDE DIAMETER PRESSURE OR TEMPERATURE PROBE WITH:
1. NEOPRENE CORE FOR TEMPERATURES UP TO 200 DEGREES F.
B. TEST KIT:
1. CARRYING CASE, INTERNALLY PADDED AND FITTED CONTAINING:
A. TWO 3–1/2 INCH DIAMETER PRESSURE GAGES.
1) SCALE RANGE: 0 TO 100 PSI
B. ONE GAGE ADAPTERS WITH 1/8 INCH PROBES.
C. TWO 1 INCH DIAL THERMOMETERS.
1) SCALE RANGE: 20 TO 180 DEGREES F.

2.06 FLEXIBLE CONNECTORS

A. CORRUGATED STAINLESS STEEL HOSE WITH SINGLE LAYER OF STAINLESS STEEL EXTERIOR BRAIDING, MINIMUM 9 INCHES LONG WITH COPPER TUBE ENDS; FOR MAXIMUM WORKING PRESSURE 300 PSIG.
2.07 DIAPHRAGM–TYPE EXPANSION TANKS
A. CONSTRUCTION: WELDED STEEL, TESTED AND STAMPED IN ACCORDANCE WITH ASME SECTION VIII; SUPPLIED WITH NATIONAL BOARD FORM U–1, RATED FOR WORKING PRESSURE OF 125 PSIG, WITH FLEXIBLE BUTYL DIAPHRAGM SEALED INTO TANK, AND STEEL SUPPORT
B. ACCESSORIES: PRESSURE GAGE AND AIR–CHARGING FITTING, TANK DRAIN; PRE–CHARGE TO 12 PSIG.
C. AUTOMATIC COLD WATER FILL ASSEMBLY: PRESSURE REDUCING VALVE, REDUCED PRESSURE DOUBLE CHECK BACK FLOW PREVENTION DEVICE, TEST COCKS, STRAINER, VACUUM BREAKER, AND BY–PASS VALVES.

2.08 AIR VENTS

A. MANUAL TYPE: SHORT VERTICAL SECTIONS OF 2 INCH DIAMETER PIPE TO FORM AIR CHAMBER, WITH 1/8 INCH BRASS NEEDLE VALVE AT TOP OF CHAMBER.

2.09 AIR SEPARATORS

A. DIP TUBE FITTING: FOR 125 PSIG OPERATING PRESSURE; TO PREVENT FREE AIR COLLECTED IN BOILER FROM RISING INTO SYSTEM.
B. IN–LINE AIR SEPARATORS: CAST IRON FOR SIZES 1–1/2 INCH AND SMALLER, OR STEEL FOR SIZES 2 INCH AND LARGER; TESTED AND STAMPED IN ACCORDANCE WITH ASME SECTION VIII; FOR 125 PSIG OPERATING PRESSURE.
C. COMBINATION AIR SEPARATORS/STRAINERS: STEEL, TESTED AND STAMPED IN ACCORDANCE WITH ASME SECTION VIII; FOR 125 PSIG OPERATING PRESSURE, WITH INTEGRAL BRONZE STRAINER, TANGENTIAL INLET AND OUTLET CONNECTIONS, AND INTERNAL STAINLESS STEEL AIR COLLECTOR TUBE.

2.10 PUMP SUCTION FITTINGS

A. FITTING: ANGLE PATTERN, CAST–IRON BODY. THREADED FOR 2 INCH AND SMALLER, FLANGED FOR 2–1/2 INCH AND LARGER. RATED FOR 175 PSIG WORKING PRESSURE, WITH INLET VANES, CYLINDER STRAINER WITH 3/16 INCH DIAMETER OPENINGS, DISPOSABLE FINE MESH STRAINER TO FIT OVER CYLINDER STRAINER, AND PERMANENT MAGNET LOCATED IN FLOW STREAM AND REMOVABLE FOR CLEANING.
B. ACCESSORIES: ADJUSTABLE FOOT SUPPORT, BLOW–DOWN TAPPING IN BOTTOM, GAGE TAPPING IN SIDE.

2.11 COMBINATION PUMP DISCHARGE VALVES

A. VALVES: STRAIGHT OR ANGLE PATTERN, FLANGED CAST–IRON VALVE BODY WITH BOLT–ON BONNET FOR 175 PSIG OPERATING PRESSURE, NON–SLAM CHECK VALVE WITH SPRING–LOADED BRONZE DISC AND SEAT, STAINLESS STEEL STEM, AND CALIBRATED ADJUSTMENT PERMITTING FLOW REGULATION.

2.12 FLOW CONTROLS

A. CONSTRUCTION: BRASS OR BRONZE BODY WITH UNION ON INLET AND OUTLET, TEMPERATURE AND PRESSURE TEST PLUG ON INLET AND OUTLET COMBINATION BLOW–DOWN AND BACK–FLUSH DRAIN.
B. CALIBRATION: CONTROL WITHIN 5 PERCENT OF DESIGN FLOW OVER ENTIRE OPERATING PRESSURE.
C. CONTROL MECHANISM: STAINLESS STEEL OR NICKEL PLATED BRASS PISTON OR REGULATOR CUP, OPERATING AGAINST STAINLESS STEEL HELICAL OR WAVE FORMED SPRING.
D. ACCESSORIES: IN–LINE STRAINER ON INLET AND BALL VALVE ON OUTLET.

2.13 RELIEF VALVES

A. BRONZE BODY, TEFLON SEAT, STAINLESS STEEL STEM AND SPRINGS, AUTOMATIC, DIRECT PRESSURE ACTUATED CAPACITIES ASME CERTIFIED AND LABELED.

3.01 INSTALLATION – THERMOMETERS AND GAGES

A. INSTALL ONE PRESSURE GAGE FOR EACH PUMP, LOCATE TAPS BEFORE STRAINERS AND ON SUCTION AND DISCHARGE OF PUMP; PIPE TO GAGE.
B. INSTALL GAGE TAPS IN PIPING
C. INSTALL PRESSURE GAGES WITH PULSATION DAMPERS. PROVIDE NEEDLE VALVE TO ISOLATE EACH GAGE. EXTEND NIPPLES TO ALLOW CLEARANCE FROM INSULATION.
D. INSTALL THERMOMETERS IN PIPING SYSTEMS IN SOCKETS IN SHORT COUPLINGS. ENLARGE PIPES SMALLER THAN 2–1/2 INCHES FOR INSTALLATION OF THERMOMETER SOCKETS. ALLOW CLEARANCE FROM INSULATION.
E. INSTALL THERMOMETER SOCKETS ADJACENT TO CONTROLS SYSTEMS THERMOSTAT, TRANSMITTER, OR SENSOR SOCKETS. COIL AND CONCEAL EXCESS CAPILLARY ON REMOTE ELEMENT INSTRUMENTS.
F. PROVIDE INSTRUMENTS WITH SCALE RANGES SELECTED ACCORDING TO SERVICE WITH LARGEST APPROPRIATE SCALE.
G. INSTALL GAGES AND THERMOMETERS IN LOCATIONS WHERE THEY ARE EASILY READ FROM NORMAL OPERATING LEVEL. INSTALL VERTICAL TO 45 DEGREES OFF VERTICAL.
H. ADJUST GAGES AND THERMOMETERS TO FINAL ANGLE, CLEAN WINDOWS AND LENSES, AND CALIBRATE TO ZERO.

3.02 INSTALLATION – HYDRONIC PIPING SPECIALTIES

A. LOCATE TEST PLUGS AS INDICATED ON DRAWINGS.
B. INSTALL MANUAL AIR VENTS AT SYSTEM HIGH POINTS.
C. PROVIDE AIR SEPARATOR ON SUCTION SIDE OF SYSTEM CIRCULATION PUMP AND CONNECT TO EXPANSION TANK.
D. PROVIDE DRAIN AND HOSE CONNECTION WITH VALVE ON STRAINER BLOW DOWN CONNECTION.
E. PROVIDE PUMP SUCTION FITTING ON SUCTION SIDE OF BASE MOUNTED CENTRIFUGAL PUMPS. REMOVE TEMPORARY STRAINERS AFTER CLEANING SYSTEMS.
F. PROVIDE COMBINATION PUMP DISCHARGE VALVE ON DISCHARGE SIDE OF BASE MOUNTED CENTRIFUGAL PUMPS.
G. SUPPORT PUMP FITTINGS WITH FLOOR MOUNTED PIPE AND FLANGE SUPPORTS.
H. PROVIDE RELIEF VALVES ON PRESSURE TANKS, LOW–PRESSURE SIDE OF REDUCING VALVES, HEAT EXCHANGERS, AND EXPANSION TANKS.
I. SELECT SYSTEM RELIEF VALVE CAPACITY GREATER THAN MAKE–UP PRESSURE REDUCING VALVE CAPACITY. SELECT EQUIPMENT RELIEF VALVE CAPACITY TO EXCEED RATING OF CONNECTED EQUIPMENT.
J. PIPE RELIEF VALVE OUTLET TO NEAREST FLOOR DRAIN.

3.03 PROTECTION OF INSTALLED CONSTRUCTION

A. DO NOT INSTALL HYDRONIC PRESSURE GAUGES UNTIL AFTER SYSTEMS ARE PRESSURE TESTED.

SECTION 23 25 00

HVAC WATER TREATMENT EQUIPMENT

PART 1 GENERAL

1.01 SUMMARY

A. SECTION INCLUDES:

1. SYSTEM CLEANER.
2. CLOSED SYSTEM TREATMENT (WATER).
3. CHEMICAL FEEDER EQUIPMENT INCLUDING ASSOCIATED FEEDERS, PUMPS, TANKS, CONTROLS, METERS AND VALVES.
4. TEST EQUIPMENT.

1.02 PERFORMANCE REQUIREMENTS

A. PROVIDE SYSTEM TO TREAT WATER AVAILABLE AT PROJECT SITE TO MAINTAIN THE FOLLOWING CHARACTERISTICS OF WATER IN CLOSED SYSTEMS:
1. HARDNESS.
2. IRON.
3. TOTAL DISSOLVED SOLIDS.
4. TOTAL ALKALINITY.
5. SILICA.
6. PH.

1.03 MANUFACTURERS
A. NALCO

1.04 SUBMITTALS

A. SHOP DRAWINGS: INDICATE SYSTEM SCHEMATIC, EQUIPMENT LOCATIONS, AND CONTROLS SCHEMATICS, ELECTRICAL CHARACTERISTICS AND CONNECTION REQUIREMENTS.
B. PRODUCT DATA: SUBMIT CHEMICAL TREATMENT MATERIALS, CHEMICALS, AND EQUIPMENT INCLUDING ELECTRICAL CHARACTERISTICS AND CONNECTION REQUIREMENTS.
C. MANUFACTURER'S INSTALLATION INSTRUCTIONS: SUBMIT PLACEMENT OF EQUIPMENT IN SYSTEMS, PIPING CONFIGURATION, AND CONNECTION REQUIREMENTS.
D. MANUFACTURER'S CERTIFICATE: CERTIFY PRODUCTS MEET OR EXCEED SPECIFIED REQUIREMENTS.
E. MANUFACTURERS FIELD REPORTS: INDICATE START–UP OF TREATMENT SYSTEMS WHEN COMPLETED AND OPERATING PROPERLY. INDICATE ANALYSIS OF SYSTEM WATER AFTER CLEANING AND AFTER TREATMENT.

1.05 CLOSEOUT SUBMITTALS

A. PROJECT RECORD DOCUMENTS: RECORD ACTUAL LOCATIONS OF EQUIPMENT AND PIPING, INCLUDING SAMPLING POINTS AND LOCATION OF CHEMICAL INJECTORS.
B. OPERATION AND MAINTENANCE DATA: SUBMIT DATA ON CHEMICAL FEED PUMPS, AGITATORS, AND OTHER EQUIPMENT INCLUDING SPARE PARTS LISTS, PROCEDURES, AND TREATMENT PROGRAMS. INCLUDE STEP BY STEP INSTRUCTIONS ON TEST PROCEDURES INCLUDING TARGET CONCENTRATIONS.

1.06 MAINTENANCE SERVICE

A. FURNISH MONTHLY TECHNICAL SERVICE VISITS, FOR ONE YEARS STARTING AT DATE OF SUBSTANTIAL COMPLETION, TO PERFORM FIELD INSPECTIONS AND MAKE WATER ANALYSIS ON SITE. DETAIL FINDINGS IN WRITING ON PROPER PRACTICES, CHEMICAL TREATING REQUIREMENTS AND CORRECTIVE ACTIONS NEEDED. SUBMIT TWO COPIES OF FIELD SERVICE REPORT AFTER EACH VISIT.
B. FURNISH LABORATORY AND TECHNICAL ASSISTANCE SERVICES DURING THIS MAINTENANCE PERIOD.
C. FURNISH ON SITE INSPECTIONS OF EQUIPMENT DURING SCHEDULED OR EMERGENCY SHUTDOWN TO PROPERLY EVALUATE SUCCESS OF WATER TREATMENT PROGRAM, AND MAKE RECOMMENDATIONS IN WRITING BASED UPON THESE INSPECTIONS.

1.07 MAINTENANCE MATERIALS

A. FURNISH CHEMICALS FOR TREATMENT AND TESTING DURING WARRANTY PERIOD.

PART 2 PRODUCTS

2.01 SYSTEM CLEANER

A. PRODUCT DESCRIPTION: LIQUID ALKALINE COMPOUND WITH EMULSIFYING AGENTS AND DETERGENTS TO REMOVE GREASE AND PETROLEUM PRODUCTS; SODIUM TRI–POLY PHOSPHATE AND SODIUM MOLYBDATE.
B. BIOCIDE; CHLORINE RELEASE AGENTS INCLUDING SODIUM HYPOCHLORITE OR CALCIUM HYPOCHLORITE, OR MICROBIOCIDES INCLUDING QUATERNARY AMMONIA COMPOUNDS, TRIBUTYL TIN OXIDE, METHYLENE BIS (THIOCYANATE), OR ISOTHIAZOLONES.

2.02 CLOSED SYSTEM TREATMENT (WATER)

A. SEQUESTERING AGENT TO REDUCE DEPOSITS AND ADJUST PH; POLYPHOSPHATE.
B. CORROSION INHIBITORS; LIQUID BORON–NITRITE, SODIUM NITRITE AND BORAX, SODIUM TOTYLTRIAZOLE, LOW MOLECULAR WEIGHT POLYMERS, PHOSPHONATES, SODIUM MOLYBDATE, OR SULFITES.
C. CONDUCTIVITY ENHANCERS; PHOSPHATES OR PHOSPHONATES.

PART 3 EXECUTION

3.01 PREPARATION

A. OPERATE, FILL, START AND VENT SYSTEMS PRIOR TO CLEANING. USE WATER METER TO RECORD CAPACITY IN EACH SYSTEM. PLACE TERMINAL CONTROL VALVES IN OPEN POSITION DURING CLEANING.

3.02 CLEANING

A. CONCENTRATION:
1. AS RECOMMENDED BY MANUFACTURER.
B. CHILLED WATER SYSTEMS:
1. CIRCULATE FOR 48 HOURS, THEN DRAIN SYSTEMS AS QUICKLY AS POSSIBLE.
2. REFILL WITH CLEAN WATER, CIRCULATE FOR 24 HOURS, THEN DRAIN.
3. REFILL WITH CLEAN WATER AND REPEAT UNTIL SYSTEM CLEANER IS REMOVED.
C. USE NEUTRALIZER AGENTS ON RECOMMENDATION OF SYSTEM CLEANER SUPPLIER AND ACCEPTANCE OF ARCHITECT/ENGINEER.
D. REMOVE, CLEAN, AND REPLACE STRAINER SCREENS.
E. INSPECT, REMOVE SLUDGE, AND FLUSH LOW POINTS WITH CLEAN WATER AFTER CLEANING PROCESS IS COMPLETED. INCLUDE DISASSEMBLY OF COMPONENTS AS REQUIRED.

GRINER ENGINEERING, INC.
1628 First Avenue North
St. Petersburg, Florida 33713
Phone: (727)-822-2335
Fax: (727)-821-3361
Certificate of Authorization #3173

Date	06-15-2017
Drawn	JL
Designed	JL
EOR	JHG
Job no.	17049

CITY OF TAMPA
CONTRACT ADMINISTRATION
DEPARTMENT
PLANNING AND DESIGN DIVISION
306 E. JACKSON STREET 4 NORTH
TAMPA, FLORIDA 33602
p: 813. 274. 8456 – f: 813. 274. 8080
url: www.tampagov.net

James E. Jackson, Jr. AIA, NOMA
City Architect
Edward D. Rice, AIA
Project Architect
Kevin L. Henika, AIA
Project Architect
Thomas A. Hester, Sr., AIA, NOMA
Project Architect
David R. Pagitt
Supervisor, Architectural Drafting
Kinsey C. Tillman
Drafting Technician
Jerry P. Sanders
Drafting Technician
Byron K. Thomas, LEED AP
Drafting Technician

MEP CONSULTANT
GRINER ENGINEERING, INC.
1628 1st. AVENUE NORTH
ST. PETERSBURG, FL 33713

STRUCTURAL CONSULTANT
BILLER REINHART
STRUCTURAL GROUP, INC.
4014 GUNN HWY. SUITE 248
TAMPA, FL 33713

CIVIL CONSULTANT
B M CIVIL LLC
12315 WYCLIFF PLACE
TAMPA, FL 33626

LANDSCAPE CONSULTANT
DAVID CONNER & ASSOCIATES
1809 W. SWANN AVENUE,SUITE 255
TAMPA, FL 33606

FIRE STATION 23
20770 TROUT CREEK DR.
TAMPA, FL 33647

DPW FILE NUMBER

DPW NUMBER
17–C–00037

ISSUE DATE
07–28–2017

DRAWN BY

REVISIONS
△
△
△

SEAL

Joseph H. Griner III, P.E. FL. 39491

SCALE: N.T.S

MECHANICAL SPECIFICATIONS

SHEET NUMBER
M–7.1
x OF x

MECHANICAL SPECIFICATION CONTINUED

3.03 CLOSED SYSTEM TREATMENT

A. PROVIDE ONE SHOT FEEDER ON EACH SYSTEM. INSTALL ISOLATING AND DRAIN VALVES AND INTERCONNECTING PIPING. INSTALL AROUND BALANCING VALVE DOWNSTREAM OF CIRCULATING PUMPS AS INDICATED ON DRAWINGS.
B. INTRODUCE CLOSED SYSTEM TREATMENT THROUGH SHOT FEEDER WHEN REQUIRED OR INDICATED BY TEST.
C. INSTALL 3/4 INCH WATER COUPON RACK AROUND CIRCULATING PUMPS WITH SPACE FOR 12 TEST SPECIMENS.

SECTION 23 30 00

HVAC AIR DISTRIBUTION:

1.0 GENERAL

1.01 SCOPE: PROVIDE ALL AIR DISTRIBUTION DEVICES AS INDICATED ON THE DRAWINGS AND AS SPECIFIED HEREIN FOR A COMPLETE AND OPERABLE SYSTEM.

1.02 RELATION TO OTHER WORK: COORDINATE WITH WORK OF THE CEILING, DRYWALL, AND PLASTERING TRADES AS REQUIRED TO INSURE AN ORDERLY PROGRESSION OF WORK AND A FIRST CLASS FINISHED SYSTEM WITH RESPECT TO PLACEMENT, ALIGNMENT, FINISH, GENERAL FIT, AND ABSENCE OF CONFLICT WITH LIGHTING SYSTEMS AND FIRE PROTECTION SYSTEMS.

1.03 DESIGN CONDITIONS:

A. ACOUSTICAL: NOISE PRODUCED AT EACH DIFFUSER, REGISTER, GRILLE, OR OTHER AIR DISTRIBUTION DEVICE SHALL NOT EXCEED A NOISE CRITERIA LEVEL OF 25 NC.

B. PRESSURE DROP ACROSS ANY AIR DISTRIBUTION DEVICE SHALL NOT EXCEED 0.10 IN W.G. STATIC.

C. GUARANTEE: AIR DISTRIBUTION EQUIPMENT SHALL BE GUARANTEED BY THE MANUFACTURER TO OPERATE WITHOUT EXCESSIVE NOISE AND WITH VELOCITIES IN THE FIVE FOOT OCCUPANCY ZONE, WHEN HANDLING AIR WITH TEMPERATURE DIFFERENTIALS AS HIGH AS 25 DEGREES, NOT TO EXCEED 30 FPM AT 2 DEGREE DIFFERENCE, 50 FPM AT 1-1/2 DEGREE DIFFERENCE, OR 75 FPM AT A 1 DEGREE DIFFERENCE WHEN OPERATING WITH AN AVERAGE 75 DEGREE ROOM TEMPERATURE AND MEASURED NO CLOSER THAN 6 INCHES FROM A WALL SURFACE.

1.04 MANUFACTURER: TITUS, PRICE, METAL AIRE, OR OTHER APPROVED PRIOR TO BID. MANUFACTURERS STYLE AND SERIES NUMBERS INDICATED ARE EXAMPLES OF PRODUCTS TO BE PROVIDED.

1.05 APPEARANCE: EACH AIR DISTRIBUTION DEVICE WHICH HAS A PORTION THEREOF (FRAME, CORE, ETC.) EXPOSED TO VIEW IN THE FINISHED AREA SHALL HAVE A FACTORY APPLIED FINISH WHICH MATCHES AND IS COMPATIBLE WITH THE COLOR OF THE SURROUNDING SURFACE ON WHICH THE DEVICE IS INSTALLED. COLORS MUST BE APPROVED BY ARCHITECT PRIOR TO DEVICE FABRICATION.

2.0 PRODUCTS

2.01 CEILING & WALL MOUNTED CONDITIONED AIR SUPPLY DIFFUSERS, RETURN AIR AND EXHAUST AIR REGISTERS.

A. DESIGNATED ON DRAWINGS BY THE MANNER OF INDICATED SYSTEM FUNCTION FOR THE DEVICE.

B. SPONGE RUBBER GASKETS.

C. ALUMINUM OR STEEL, AS SPECIFIED.

D. COMPANION ADJUSTABLE VOLUME DAMPERS.

E. PROVIDED WITH INSULATED BACKS.

3.0 EXECUTION

3.01 GENERAL:

A. INSTALL NEATLY WHERE INDICATED IN ACCORD WITH MANUFACTURER'S RECOMMENDATIONS AND IN ACCORD WITH SMACNA RECOMMENDATIONS AND AS OTHERWISE INDICATED.

B. PROPERLY TEST, BALANCE AND ADJUST TO PRODUCE QUIET, DRAFTLESS OPERATING TO BEST DEGREE POSSIBLE.

3.02 SQUARE AIR DEVICES: WHERE DIFFUSERS ARE IN LAY-IN TYPE, THEY SHALL BE SUPPORTED BY THE INVERTED T-BAR SUSPENSION SYSTEM, BUT ALL DUCTS CONNECTED THERETO SHALL BE SUPPORTED INDEPENDENTLY OF THE CEILING AS SPECIFIED UNDER SECTION ENTITLED "DUCTWORK". SURFACE MOUNTED DIFFUSERS SHALL BE SUPPORTED BY THE DUCT RUNOUTS OR DROPS WHERE SHEET METAL DUCTS ARE INDICATED AND BY SEPARATE HANGERS WHERE FLEX RUNOUTS ARE INDICATED. ALL RECTANGULAR CEILING DIFFUSERS SHALL BE INSTALLED WITH THEIR LINES PARALLEL AND PERPENDICULAR TO THE BUILDING LINE AND PROPERLY ALIGNED WITH CEILING.

SECTION 23 31 00

HVAC DUCTS AND CASINGS:

1.0 GENERAL

1.01 SCOPE: PROVIDE COMPLETE DUCT SYSTEMS AS INDICATED. SYSTEMS SHALL INCLUDE, BUT NOT BE LIMITED TO, THE FOLLOWING: OUTSIDE AIR, EXHAUST AIR, AND AIR CONDITIONING SUPPLY AND RETURN AIR DUCT SYSTEMS AS SHOWN ON DRAWINGS. DRAWING SCALES PROHIBIT THE INDICATION OF ALL OFFSETS, FITTINGS, AND LIKE ITEMS; HOWEVER, THESE ITEMS SHALL BE INSTALLED AS REQUIRED FOR THE ACTUAL PROJECT CONDITIONS AT NO CHANGE IN CONTRACT PRICE.

A. ITEMS INCLUDED: THIS SECTION GENERALLY INCLUDES, BUT IS NOT LIMITED TO, THE FOLLOWING MAJOR ITEMS:

1. SHEET METAL DUCTWORK.

2. DUCT SYSTEM ACCESSORIES.

A. FLEXIBLE DUCT CONNECTIONS.

B. TURNING VANES.

C. MANUAL VOLUME DAMPERS.

D. ACCESS DOORS.

1.02 SHOP DRAWINGS: REFER TO SECTION ENTITLED "COMMON REQUIREMENTS FOR MECHANICAL WORK". INCLUDE COMPLETE DATA FOR; FLEXIBLE DUCT, FLEXIBLE CONNECTORS, TURNING VANES, MANUAL VOLUME DAMPERS; ACCESS DOORS; FLEXIBLE CONNECTORS; MANUAL VOLUME DAMPERS AND ADHESIVES.

1.03 DEFINITIONS:

A. "SMACNA" MEANS "SHEET METAL AND AIR CONDITIONING CONTRACTORS' NATIONAL ASSOCIATION, INC."

B. LOW PRESSURE DUCTWORK: ANY AND ALL DUCTWORK CONVEYING AIR OR OTHER GASES AT VELOCITIES LESS THAN 2000 FPM AND STATIC PRESSURE LESS THAN 2.0 INCHES W.G. THIS DUCTWORK MAY ALSO BE REFERRED TO IN THESE SPECIFICATIONS AS "LOW VELOCITY DUCTWORK" SMACNA "HVAC DUCT CONSTRUCTION STANDARDS, METAL AND FLEXIBLE," THIRD EDITION, 2005, SHALL GOVERN CONSTRUCTION OF THIS DUCTWORK UNLESS OTHERWISE SPECIFIED; CONSTRUCT DUCT IN ACCORD THEREWITH.

2.0 PRODUCTS

2.01 LOW PRESSURE SHEET METAL DUCTWORK: SYSTEMS OPERATING AT TWO INCHES OF WATER STATIC PRESSURE OR LESS, SHALL, UNLESS SPECIFICALLY SPECIFIED OTHERWISE, CONFORM TO THE FOLLOWING REQUIREMENTS:

A. MATERIAL: PRIME QUALITY FORTY-EIGHT INCH WIDE, TIGHT COAT GALVANIZED STEEL CONFORMING TO THE REQUIREMENTS OF ASTM A-526.

B. REINFORCING, CROSS BREAKING, SEAMS, JOINTS: BE IN ACCORDANCE WITH LATEST SMACNA CONSTRUCTION STANDARD FOR LOW PRESSURE SHEET METAL DUCT.

2.02 LOW PRESSURE ROUND DUCTWORK: DUCT SHALL BE MADE USING GALVANIZED STEEL AS PER ASTM A-527 G-90 WITH LONGITUDINAL SNAP-LOCK.

2.03 INSULATED FLEXIBLE DUCTS: FLEXIBLE DUCT SHALL CONSIST OF SPIRAL WOUND HELIX COIL WITH TRILAMINATE INNER FABRIC. CORE SHALL BE COVERED WITH FACTORY APPLIED ONE INCH, ONE POUND PER CUBIC FOOT FIBERGLASS INSULATION OF 0.23 THERMAL CONDUCTANCE SHEATHED IN A SEAMLESS EXTERIOR CLASS 1 VAPOR BARRIER JACKET REINFORCED ALUMINUM FOIL METALIZED JACKET. CONNECTIONS SHALL BE MADE USING QUADRANT DAMPERED TWIST_IN TYPE FITTINGS WITH EXTRACTOR SCOOPS AND VOLUME DAMPER. DUCT SHALL BE NFPA 90A, CLASS 1 (UL 181), FLAME SPREAD LESS THAN 25 AND SMOKE DEVELOPED LESS THAN 50. PROVIDE IN FACTORY FINISHED LENGTHS NOT IN EXCESS OF 6'-0" TO MAKE SUITABLE CONNECTIONS WITH MINIMUM PRESSURE DROP WITH "SPIN-IN" FITTING WITH INTEGRAL DAMPER AT CONNECTION TO MAIN DUCT BRANCH.

2.04 KITCHEN HOOD EXHAUST DUCT: 16 GAUGE CARBON STEEL WITH CONTINUOUS LIQUID TIGHT EXTERNALLY WELDED SEAMS AND JOINTS.

2.05 DUCT SYSTEM ACCESSORIES:

A. GENERAL:

1. PROVIDE ALL NECESSARY DUCT SYSTEM ACCESSORIES TO ASSURE PROPER BALANCE, QUIET AND DRAFTLESS DISTRIBUTION AND CONVEYANCE, AND MINIMIZATION OF TURBULENCE, NOISE AND PRESSURE DROP FOR ALL SUPPLY, RETURN, EXHAUST, AND VENTILATION AIR QUANTITIES INDICATED.

B. FLEXIBLE DUCT CONNECTIONS:

1. PROVIDED WHERE AIR HANDLERS, FANS AND BLOWERS CONNECT TO DUCTWORK WHEN NOT INTERNALLY ISOLATED.

2. AT LEAST 4 INCHES LONG.

3. CONNECTED ON EACH SIDE TO METAL (METAL DUCTWORK, AIR HANDLING APPARATUS, OR HEAVY GAUGE STEEL SLEEVES).

4. FOR USE IN LOW PRESSURE DUCT SYSTEMS.

C. LOW PRESSURE METAL TURNING VANES: PROVIDE IN ALL ELBOWS, BENDS AND TEES OF ALL LOW VELOCITY SUPPLY AIR DUCTS WHETHER OR NOT SHOWN IN DETAIL; PROVIDE IN ALL ELBOWS, BENDS AND TEES OF ALL OTHER LOW VELOCITY DUCTS WHERE PORTIONS OF SUCH DUCTS CONVEY AIR AT GREATER THAN 700 FPM AVERAGE VELOCITY. ADEQUATE RIGIDITY AND STRENGTH TO BE COMPLETE FLUTTER-PROOF, PROPERLY DESIGNED; PERMANENTLY FIXED TYPE. ALUMINUM, STEEL WITH CORROSION RESISTANT COATING, OR GALVANIZED STEEL. AIR FOIL TYPE IN ALL MITERED ELBOWS, MITERED BENDS AND MITERED TEES. AIR FOIL TYPE MUST BE MANUFACTURED BY TITUS, TUTTLE & BAILEY, ANEMOSTAT, WATERLOO, METAL-AIRE, BARBER-COLMAN, "AIRTURNS", TUTTLE & BAILEY "DUCTURNS", OR DURA-DYNE "VR" WITH 24 GAUGE RAILS AND HOLLOW VANES.

D. MANUAL VOLUME DAMPERS: (OTHER THAN THOSE SPECIFIED AS BEING INTEGRAL WITH EACH REGISTER, DIFFUSER AND OTHER AIR OUTLET OR INLET):

1. PROVIDE WHERE INDICATED IN THE COMPLETE AIR DISTRIBUTION SYSTEM(S) (INCLUDING DUCTWORK, RETURN AIR PLENUMS, ETC.) TO ALLOW COMPLETE BALANCING OF THE AIR SUPPLY, RETURN, VENTILATION AND EXHAUST SYSTEM(S).

2. OPPOSED BLADE TYPE.

3. AN 8" MAXIMUM BLADE WIDTH.

4. MADE OF GALVANIZED STEEL OR STEEL WITH A SPRAYED OR DIPPED ALUMINUM RUST RESISTANT FINISH; FLUTTER-PROOF.

5. PROVIDED SO THAT ALL DAMPER ADJUSTMENTS CAN BE MADE FROM OUTSIDE THE COMPLETED DUCTWORK WITHOUT NECESSITY FOR PUNCTURING OR OTHERWISE PENETRATING DUCTWORK AND/OR ITS VAPOR BARRIER.

6. FULLY ADJUSTABLE AND WITH LOCKING DEVICE.

7. PROVIDED AT A POINT IN THE DUCTWORK WHICH IS A SUFFICIENT DISTANCE UPSTREAM FROM AN OUTLET (OR DOWNSTREAM FROM AN INLET) TO ATTENUATE OBJECTIONABLE NOISE DUE TO DAMPER THROTTLING AND TO PRECLUDE ADVERSE AFFECTS ON THE DISTRIBUTION CHARACTERISTICS (THROW, DROP, PATTER, ETC.) OF THE AIR DISTRIBUTION DEVICE.

E. LOW PRESSURE DUCT ACCESS DOORS:

1. PROVIDED FOR: FIRE DAMPER AND WHERE ACCESS IS OTHERWISE NECESSARY.

2. FACTORY PREFABRICATED DOUBLE WALL INSULATED TYPE OF 24 US GAUGE GALVANIZED STEEL (OF SAME OR THICKER GAUGE THAN DUCTWORK PANEL IN WHICH INSTALLED, WHICHEVER IS GREATER).

3. MINIMUM SIZE SHALL BE AS LARGE AS IS COMPATIBLE WITH DUCT SIZE

4. DOORS SHALL BE PROVIDED WITH HAND OPERATED ADJUSTABLE TENSION CATCHES AND SHALL BE COMPLETELY GASKETED AROUND THEIR PERIMETERS. DOORS SHALL BE VENTLOCK "ACCESS DOORS". INSTALL IN ACCORDANCE WITH MANUFACTURER'S RECOMMENDATIONS USING VENTLOCK #360 SEALANT.

3.0 EXECUTION

3.01 GENERAL:

A. CONSTRUCT ALL DUCTWORK AND ACCESSORIES IN ACCORDANCE WITH THE LATEST INDICATED EDITIONS OF APPLICABLE SHEET METAL AND AIR CONDITIONING CONTRACTORS' NATIONAL ASSOCIATION CONSTRUCTION STANDARDS.

B. STREAMLINE ALL DUCTWORK TO THE FULL EXTENT PRACTICAL AND EQUIP WITH PROPER AND ADEQUATE DEVICES TO ASSURE PROPER BALANCE AND QUIET DRAFT LESS DISTRIBUTION OF INDICATED AIR QUANTITIES.

C. PROTECT ALL DUCTWORK AND SYSTEM ACCESSORIES FROM DAMAGE DURING CONSTRUCTION UNTIL ARCHITECT'S FINAL ACCEPTANCE OF PROJECT.

D. PRIOR TO DUCTWORK FABRICATION, VERIFY IF ALL DUCTWORK AS DIMENSIONED AND GENERALLY SHOWN WILL SATISFACTORILY FIT ALLOCATED SPACES. TAKE PRECAUTIONS TO AVOID SPACE INTERFERENCES WITH BEAMS, COLUMNS, JOISTS, PIPES, LIGHTS, CONDUIT, OTHER DUCTS, EQUIPMENT, ETC. NOTIFY ARCHITECT IF ANY SPATIAL CONFLICTS EXIST, AND THEN OBTAIN ARCHITECT'S APPROVAL OF NECESSARY ROUTING. MAKE ANY SUCH NECESSARY REVISIONS WHICH ARE MINOR AT NO ADDITIONAL COST.

E. CAREFULLY CORRELATE ALL DUCT CONNECTIONS TO AIR HANDLING UNITS AND FANS TO PROVIDE PROPER CONNECTIONS, ELBOWS AND BENDS WHICH MINIMIZE NOISE AND PRESSURE DROP.

F. PROPERLY SUSPEND ALL DUCTWORK SO THAT NO OBJECTIONABLE CONDITIONS RESULT (SUCH AS VIBRATION, SAGGING, ETC.).

G. INSTALL HORIZONTAL RIGID DUCTWORK AS HIGH AS PRACTICAL ABOVE SUSPENDED CEILINGS SO THAT MOVABLE LIGHT FIXTURES MAY BE RELOCATED WITHOUT INTERFERENCE TO MEET ANY FUTURE PARTITION RELOCATION REQUIREMENTS.

H. INSTALL ALL FLEXIBLE ROUND DUCTS WITHOUT KINKS OR SIMILAR OBSTRUCTIONS SO THAT PRESSURE DROP IS MINIMIZED. CUT AND REMOVE EXCESS LENGTHS AS NECESSARY.

3.02 HANGERS AND SUPPORTS:

A. GENERAL: COMPLY WITH LATEST APPLICABLE SMACNA CONSTRUCTION STANDARDS.

B. SUPPORTS: VERTICAL RISERS AND OTHER DUCT RUNS WHERE THE METHOD OF SUPPORT SPECIFIED ABOVE IS NOT APPLICABLE SHALL BE SUPPORTED BY SUBSTANTIAL ANGLE BRACKETS DESIGNED TO MEET FIELD CONDITIONS AND INSTALLED TO ALLOW FOR DUCT EXPANSION.

C. FASTENERS: SECURE HANGERS TO STEEL BEAMS OR METAL DECK WITH BEAM CLAMPS TO DROP THROUGH CONNECTIONS FROM METAL OR CONCRETE DECK. REFER TO THE REQUIREMENTS OF THE SECTION ENTITLED "COMMON REQUIREMENTS FOR MECHANICAL WORK".

3.03 INSULATED DUCT: WHERE DUCTS WILL BE INSULATED, MAKE PROVISION FOR NEAT INSULATION FINISH AROUND DAMPER OPERATING QUADRANTS, SPLITTER ADJUSTMENT CLAMPS, ACCESS DOORS, AND SIMILAR OPERATING DEVICES. A METAL COLLAR EQUIVALENT IN DEPTH TO INSULATION THICKNESS AND OF SUITABLE SIZE TO WHICH INSULATION MAY BE FINISHED SHALL BE MOUNTED ON DUCT.

3.03 OTHER REQUIREMENTS:

A. IF DUCTWORK MATERIALS ARE INSTALLED WHICH DO NOT MEET THESE SPECIFICATIONS, CONTRACTOR SHALL REMOVE SUCH DUCTWORK MATERIALS AND REPLACE THEM WITH THE SPECIFIED MATERIALS. ANY DELAY IN JOB PROGRESS WILL BE THE RESPONSIBILITY OF THE CONTRACTOR.

SECTION 23 34 00

HVAC FANS:

1.01 CEILING MOUNTED CABINET EXHAUST FANS:

A. MANUFACTURERS: GREENHECK CORP., LOREN COOK COMPANY, PENN VENTILATION OR OTHER APPROVED PRIOR TO BID.

B. CENTRIFUGAL FAN UNIT: DIRECT DRIVEN WITH INJECTION MOLDED RESIN GALVANIZED STEEL HOUSING LINED WITH 1/2 INCH ACOUSTIC INSULATION, RESILIENT MOUNTED MOTOR, GRAVITY BACKDRAFT DAMPER IN DISCHARGE OPENING, INTEGRAL OUTLET DUCT COLLAR. DISCHARGE POSITION CONVERTIBLE BY MOVING INTERCHANGEABLE PANELS.

1. DISCONNECT SWITCH: CORD AND PLUG IN HOUSING FAN MOUNTED TOGGLE SWITCH FOR THERMAL OVERLOAD PROTECTED MOTOR.

2. GRILLE: MOLDED WHITE PLASTIC ALUMINUM WITH BAKED WHITE ENAMEL FINISH PAINTED STEEL.

3. WHEEL: DWDI CENTRIFUGAL FORWARD CURVED TYPE CONSTRUCTED OF INJECTION MOLDED OR POLYPROPYLENE RESIN.

4. MOTOR: OPEN DRIP PROOF TYPE WITH PERMANENTLY LUBRICATED SEALED BEARINGS AND THERMAL OVERLOAD PROTECTION.

2.01 CENTRIFUGAL ROOF EXHAUST FANS:

A. MANUFACTURERS: GREENHECK CORP., LOREN COOK COMPANY, PENN VENTILATION OR APPROVED EQUAL.

B. DESCRIPTION

1. HOUSING: REMOVABLE SPUN ALUMINUM FAN SHROUD WITH STAINLESS STEEL HARDWARE.ALUMINUM CURB CAP AND WINDBAND WITH ALUMINUM BIRDSCREEN.

2. DISCONNECT SWITCH: NEMA 1 SWITCH FACTORY MOUNTED WITHIN THE MOTOR COMPARTMENT AND ACCESSIBLE THRU THE REMOVABLE FAN SHROUD.

3. WHEEL: CENTRIFUGAL BACKWARD INCLINED CONSTRUCTED OF ALUMINUM. WHEEL SHALL BE STATICALLY AND DYNAMICALLY BALANCED.

4. MOTOR: OPEN DRIP PROOF TYPE WITH PERMANENTLY LUBRICATED SEALED BEARINGS AND THERMAL OVERLOAD PROTECTION.

C. ROOF CURBS

1. CONTRACTOR SHALL PROVIDE FACTORY SUPPLIED ROOF CURB, 16 GAUGE PERIMETER MADE OF ZINC COATED STEEL WITH SUPPLY AND RETURN AIR GASKETING AND WOOD NAILER STRIPS. SHIP KNOCKED DOWN AND PROVIDED WITH INSTRUCTIONS FOR EASY ASSEMBLY.

2. CURB SHALL BE MANUFACTURED IN ACCORDANCE WITH THE NATIONAL ROOFING CONTRACTORS ASSOCIATION GUIDELINES.

SECTION 23 36 00

AIR TERMINAL UNITS:

1.0 GENERAL

1.01 SCOPE: PROVIDE TERMINAL UNITS WHERE INDICATED ON DRAWINGS. UNIT CAPACITY AND OPERATING CONDITIONS SHALL BE AS SCHEDULED ON THE DRAWINGS.

1.03 MANUFACTURER: BASIS OF DESIGN IS CARRIER, ACCEPTABLE MANUFACTURER'S ARE ENVIRO-TEC, TITUS, AND PRICE OR OTHER APPROVED PRIOR TO BID.

1.04 NOISE CRITERIA: UNLESS OTHERWISE INDICATED ON DRAWINGS, THE MAXIMUM ALLOWABLE NC LEVEL IN ANY OCCUPIED SPACE (UNLESS OTHERWISE INDICATED) SHALL NOT EXCEED NC-30 AS A RESULT OF RADIATED OR DISCHARGED NOISE FROM ANY TERMINAL UNIT.

2.0 PRODUCTS

2.01 FRAME: COMPLETELY FACTORY ASSEMBLED.

2.02 CASING: CASING SHALL BE NOT LESS THAN 22 GAUGE GALVANIZED STEEL INTERNALLY INSULATED WITH FIBERGLASS MEETING REQUIREMENTS OF NFPA 90A.

2.03 FANS: DOUBLE WIDTH DOUBLE INLET FORWARD CURVED BLADE TYPE STATICALLY AND DYNAMICALLY BALANCED. FANS SHALL BE OF THE DIRECT DRIVE TYPE WITH PERMANENTLY LUBRICATED SPLIT CAPACITOR TYPE MOTOR SUITABLE FOR THE POWER SUPPLY SCHEDULED. FAN ASSEMBLY SHALL BE INTERNALLY ISOLATED USING RUBBER IN SHEAR ISOLATORS.

A. FAN PORTION OF THE ASSEMBLY SHALL BE CONFIGURED TO OPERATE IN A PARALLEL AIRFLOW MADE WITH THE PRIMARY AIR VOLUME DAMPER. FAN PORTION SHALL NOT BE IN SERIES WITH THE PRIMARY COLD AIR INLET VOLUME DAMPER DEVICE.

2.04 VOLUME DAMPER: SHALL BE A PRESSURE INDEPENDENT, VARIABLE CONSTANT VOLUME CONTROL DEVICE.

2.05 CONTROL REQUIREMENT:

A. FAN TERMINAL UNITS MUST BE INDEPENDENT OF INLET PRESSURE FLUCTUATION IN THE MAIN OR BRANCH DUCT SYSTEM. UNITS MUST HAVE CONTROLS WHICH ARE FACTORY INSTALLED, FACTORY CALIBRATED AND FACTORY TESTED TO BE PRESSURE-INDEPENDENT.

1. UNITS SHALL MAINTAIN CONSTANT DISCHARGE FLOW FOR ANY GIVEN SETPOINT WITH ANY VARIATION IN INLET STATIC PRESSURE BETWEEN 0.2 INCH W.G. AND 6.0 INCH W.G.

2. ALL FAN TERMINAL UNITS MUST BE FACTORY SET FOR DESIGN AIR FLOWS.

3. THE MAXIMUM AIR PRESSURE DROP ACROSS THE FAN TERMINAL UNIT AT MAXIMUM DESIGN COOLING AIR FLOW AND AT WHICH THE UNIT WILL OPERATE UNDER PROPER CONTROL SHALL NOT EXCEED STATIC PRESSURES AS INDICATED ON DRAWINGS.

B. UNIT MUST HAVE CAPABILITY FOR EASY FIELD ADJUSTMENT OF MAXIMUM AND MINIMUM AIR QUANTITIES BY RESETTING OF CONTROLLER ON TERMINAL UNIT.

C. DISCHARGE VOLUME SETTING CONTROLLED THROUGHOUT INDICATED VARIABLE OPERATING RANGE BY OPERATION UNDER THERMOSTATIC CONTROL.

D. DIRECT DIGITAL CONTROLLER FOR THE TERMINAL UNIT SHALL BE PROVIDED BY THE BUILDING CONTROLS MANUFACTURER.

E. CONTROLS MUST BE COMPLETELY COMPATIBLE IN ALL RESPECTS WITH THE RELATED COMPONENTS OF THE BUILDING TEMPERATURE CONTROL SYSTEM.

2.06 OPERATING SEQUENCE: TERMINAL UNITS SHALL HAVE ALL NECESSARY CONTROLS AND ACCESSORIES TO OPERATE AS FOLLOWS: TU SHALL FUNCTION AS A SINGLE INLET VAV TERMINAL UNIT SUCH THAT AT MAXIMUM COOLING DEMAND, TU PASSES MAXIMUM COLD AIR. AS COOLING DEMAND DECREASES, TU WILL THROTTLE DOWN DISCHARGE AIR TO SPACE IN RESPONSE TO ROOM THERMOSTAT UNTIL IT REACHES A PRESET MINIMUM. AS DEMAND FOR HEATING TAKES OVER IN RESPONSE TO THERMOSTAT SIGNAL, ELECTRIC HEATING COIL SHALL BE ACTUATED TO HEAT THE AIR BEING CONVEYED BY THE TU.

2.07 ACCESS: A GASKETED ACCESS PANEL SHALL BE PROVIDED IN THE UNIT CASING TO ALLOW REMOVAL OF THE FAN DRIVE MOTOR FOR SERVICE.

2.08 ELECTRIC HEATING COIL: EACH FAN TERMINAL UNIT SHALL BE PROVIDED WITH AN INTEGRAL, FACTORY MOUNTED ELECTRIC HEATING COIL. HEATING COILS SHALL HAVE ALL OPERATING CHARACTERISTICS AND INSULATION COMPLETELY COORDINATED TO FUNCTION SATISFACTORY AS AN INTEGRAL PART OF THE FAN TERMINAL UNIT.

A. OTHER REQUIREMENTS:

1. MEET ALL APPLICABLE REQUIREMENTS OF THE CURRENT NEC.

2. UL LISTED INCLUDING ALL BUILT-IN COMPONENTS.

3. COORDINATED WITH THE SPECIFIED REQUIREMENTS OF THE MECHANICAL SYSTEM CONTROL SYSTEM.

B. MATERIALS:

1. OPEN COIL TYPE.

2. FULL FINE BREAK MERCURY CONTACTORS WHICH WILL BREAK ALL UNGROUNDED CONDUCTORS (NOTE HORIZONTAL, VERTICAL OR OBLIQUE POSITION OF EACH HEATER ASSEMBLY AS SHOWN ON DRAWINGS).

3. TRANSFORMER WITH PRIMARY FUSING IF CONTROL VOLTAGE IS DIFFERENT FROM SUPPLY VOLTAGE.

4. OVERCURRENT PROTECTION IN ACCORD WITH NEC REQUIREMENTS.

5. CONTROL TERMINALS AND POWER TERMINALS.

6. BUILT-IN OR REMOTE PRESSURE TYPE AIR FLOW SWITCH. INSTALL IN SERIES WITH AUTOMATIC RESET THERMAL CUTOUT.

C. WIRING DIAGRAMS: PROVIDE COMPLETE CONTROL WIRING DIAGRAMS FURNISHED BY THE HEATING COIL MANUFACTURER TO THE MECHANICAL SYSTEMS CONTROL MANUFACTURER AND THE ELECTRICAL CONTRACTOR. THIS WIRING DIAGRAM SHALL COMPLETELY INDICATE IN FULL DETAIL ALL ELECTRICAL AND CONTROL WIRING REQUIREMENTS, TERMINAL, ETC. NECESSARY TO ALLOW THE CONTROL MANUFACTURER AND ELECTRICAL CONTRACTOR TO COMPLETELY COORDINATE THEIR RESPECTIVE WIRING PORTIONS OF THE TERMINAL UNIT SYSTEM INSTALLATION.

3.0 EXECUTION

3.01 UNIT LOCATION: UNIT LOCATION SHALL ESSENTIALLY BE AS SHOWN ON THE DRAWINGS; HOWEVER, ACTUAL PLACEMENT OF THE UNIT SHALL BE VERIFIED USING FIELD MEASUREMENTS AND DATA RELATING TO THE EQUIPMENT APPROVED FOR ACTUAL INSTALLATION ON THIS PROJECT. COORDINATE LOCATION WITH ALL DUCTS, BEAMS, JOISTS, CONDUIT, LIGHTS, PIPING, AIR DISTRIBUTION DEVICES AND OTHER ITEMS IN IMMEDIATE VICINITY OF INDICATED LOCATIONS. MAKE MINOR ADJUSTMENTS IN EXACT LOCATIONS SHOWN TO BEST FIT AVAILABLE SPACE.

3.02 ADDITIONAL INSTALLATION REQUIREMENTS:

A. LOCATE BOXES SO THAT ACCESS FOR REPAIR, MAINTENANCE AND ADJUSTMENT IS EASILY FACILITATED WITHOUT REMOVAL OF OTHER PERMANENTLY LOCATED ITEMS WHICH ARE IN THE IMMEDIATE VICINITY OF BOXES (THIS EXCLUDES REMOVABLE CEILING PANELS, REMOVABLE AIR DISTRIBUTION DEVICES ATTACHED TO FLEXIBLE DUCTWORK AND OTHER SIMILAR ITEMS).

B. NO TERMINAL UNIT OUTLET SHALL BE NEARER THAN 60 INCHES FROM THE FIRST FLEXIBLE DUCT CONNECTION TAKE-OFF TO THE FIRST DOWNSTREAM AIR DISTRIBUTION DEVICE.

SECTION 23 64 11

PACKAGED WATER CHILLERS-RECIPROCATING, SCROLL, AND SCREW:

1.0 GENERAL

1.01 SUMMARY

A. SECTION INCLUDES DESIGN, PERFORMANCE CRITERIA, REFRIGERANTS, CONTROLS, AND INSTALLATION REQUIREMENTS FOR AIR-COOLED ROTARY SCREW PACKAGED CHILLERS

B. COMPLY WITH APPLICABLE STANDARDS/CODES OF ARI 550/590, ANSI/ASHRAE 15, ASHRAE 90.1 AND ASME SECTION VIII DIV 1.

1.03 SUBMITTALS

A. SUBMIT SHOP DRAWINGS AND PRODUCT DATA IN ACCORDANCE WITH SPECIFICATION REQUIREMENTS

B. SUBMITTALS SHALL INCLUDE THE FOLLOWING:

1. DIMENSIONED PLAN AND ELEVATION VIEW DRAWINGS, REQUIRED CLEARANCES, AND LOCATION OF ALL FIELD CONNECTIONS.

2. SUMMARY OF ALL AUXILIARY UTILITY REQUIREMENTS SUCH AS ELECTRICITY, WATER, COMPRESSED AIR, ETC. SUMMARY SHALL INDICATE QUALITY AND QUANTITY OF EACH REQUIRED UTILITY.

3. SINGLE LINE SCHEMATIC DRAWING OF THE POWER FIELD HOOKUP REQUIREMENTS, INDICATING ALL ITEMS THAT ARE FURNISHED.

4. SCHEMATIC DIAGRAM OF CONTROL SYSTEM INDICATING POINTS FOR FIELD CONNECTION. DIAGRAM SHALL FULLY DELINEATE FIELD AND FACTORY WIRING.

5. CERTIFICATION OF FACTORY RUN TEST OF CHILLER UNIT SIGNED BY COMPANY OFFICER.

6. INSTALLATION MANUALS.

GRINER ENGINEERING, INC.
1628 First Avenue North
St. Petersburg, Florida 33713
Phone: (727)-822-2335
Fax: (727)-821-3361
Certificate of Authorization #3173

Date	06-15-2017
Drawn	JL
Designed	JL
EOR	JHG
Job no.	17049

CITY OF TAMPA
CONTRACT ADMINISTRATION DEPARTMENT
PLANNING AND DESIGN DIVISION
306 E. JACKSON STREET 4 NORTH
TAMPA, FLORIDA 33602
p: 813. 274. 8456 - f: 813. 274. 8080
url: www.tampagov.net

James E. Jackson, Jr. AIA, NOMA
City Architect
Edward D. Rice, AIA
Project Architect
Kevin L. Henika, AIA
Project Architect
Thomas A. Hester, Sr., AIA, NOMA
Project Architect
David R. Pagitt
Supervisor, Architectural Drafting
Kinsey C. Tillman
Drafting Technician
Jerry P. Sanders
Drafting Technician
Byron K. Thomas, LEED AP
Drafting Technician

MEP CONSULTANT
GRINER ENGINEERING, INC.
1628 1st. AVENUE NORTH
ST. PETERSBURG, FL 33713

STRUCTURAL CONSULTANT
BILLER REINHART
STRUCTURAL GROUP, INC.
4014 GUNN HWY. SUITE 248
TAMPA, FL 33713

CIVIL CONSULTANT
B M CIVIL LLC
12315 WYCLIFF PLACE
TAMPA, FL 33626

LANDSCAPE CONSULTANT
DAVID CONNER & ASSOCIATES
1809 W. SWANN AVENUE,SUITE 255
TAMPA, FL 33606

FIRE STATION 23
20770 TROUT CREEK DR.
TAMPA, FL 33647

DPW FILE NUMBER

DPW NUMBER
17-c-00037

ISSUE DATE
07-28-2017

DRAWN BY

REVISIONS

SEAL

Joseph H. Griner III, P.E. FL. 39491

SCALE: NOT TO SCALE

MECHANICAL SPECIFICATIONS

SHEET NUMBER

M-7.2

X OF X

MECHANICAL SPECIFICATION CONTINUED

1.04 QUALITY ASSURANCE

A. QUALIFICATIONS: EQUIPMENT MANUFACTURER MUST SPECIALIZE IN THE MANUFACTURE OF THE PRODUCTS SPECIFIED AND HAVE FIVE YEARS EXPERIENCE WITH THE EQUIPMENT AND REFRIGERANT OFFERED.

B. CHILLER MANUFACTURER MUST BE ISO 9001:2000 REGISTERED.

1.05 DELIVERY AND HANDLING

A. CHILLERS SHALL BE DELIVERED TO THE JOB SITE COMPLETELY ASSEMBLED AND CHARGED WITH REFRIGERANT AND OIL BY THE MANUFACTURER

B. COMPLY WITH THE MANUFACTURER INSTRUCTIONS FOR RIGGING AND HANDLING EQUIPMENT.

1.06 WARRANTY

A. THE REFRIGERATION EQUIPMENT MANUFACTURER'S WARRANTY SHALL BE FOR A PERIOD OF ONE YEAR FROM DATE OF EQUIPMENT START UP. IT SHALL COVER DEFECTS IN MATERIAL AND WORKMANSHIP THAT HAVE PROVEN DEFECTIVE WITHIN THE ABOVE PERIOD, INCLUDING REFRIGERANT LOST DUE TO A WARRANTY FAILURE.

B. THE COMPRESSOR PARTS WARRANTY SHALL BE EXTENDED FOR AN ADDITIONAL 48 MONTHS.

PART 2: PRODUCTS

2.01 ACCEPTABLE MANUFACTURERS

A. YORK INTERNATIONAL, CARRIER AND TRANE OR APPROVED EQUAL.

2.02 UNIT DESCRIPTION

A. PROVIDE AND INSTALL AS SHOWN ON THE PLANS FACTORY ASSEMBLED, FACTORY CHARGED AND FACTORY RUN TESTED AIR-COOLED SCROLL COMPRESSOR PACKAGED CHILLER(S) IN THE QUANTITY SPECIFIED. EACH CHILLER SHALL CONSIST OF HERMETIC SCROLL COMPRESSORS, FLOODED EVAPORATOR, AIR-COOLED CONDENSER SECTION, CONTROL SYSTEM, PUMP SYSTEM AND ALL COMPONENTS NECESSARY FOR SAFE AND CONTROLLED UNIT OPERATION.

2.03 DESIGN REQUIREMENTS

A. GENERAL: PROVIDE A COMPLETE PACKAGED CHILLER AS SPECIFIED HEREIN AND AS SHOWN ON THE DRAWINGS.

2.04 CONTROLS, SAFETIES, AND DIAGNOSTICS
1. CONTROLS
A. UNIT CONTROLS SHALL INCLUDE THE FOLLOWING MINIMUM COMPONENTS:
1. MICROPROCESSOR WITH NONVOLATILE MEMORY. BATTERY BACKUP SYSTEM NOT TO BE ACCEPTED.
2. SINGLE TERMINAL BLOCK FOR POWER AND CONTROLS.
3. CONTROL TRANSFORMER TO SERVE ALL CONTROLLERS, RELAYS, AND CONTROL COMPONENTS.
4. ON/OFF CONTROL SWITCH.
5. REPLACEABLE SOLID-STATE RELAY PANELS AND CONTROLLERS.
6. PRESSURE SENSORS INSTALLED TO MEASURE COOLER ENTERING AND LEAVING SATURATED TEMPERATURES AND OUTSIDE AIR TEMPERATURE. THERMISTORS INSTALLED TO MEASURE COOLER ENTERING AND LEAVING FLUID TEMPERATURES. PROVISION FOR FIELD INSTALLATION OF ACCESSORY SENSOR TO MEASURE COMPRESSOR RETURN GAS TEMPERATURE.
2.05 UNIT CONTROLS SHALL INCLUDE THE FOLLOWING FUNCTIONS:
1. AUTOMATIC CIRCUIT LEAD/LAG FOR DUAL CIRCUIT CHILLERS.
2. CAPACITY CONTROL BASED ON LEAVING CHILLED FLUID TEMPERATURE AND COMPENSATED BY RATE OF CHANGE OF RETURN-FLUID TEMPERATURE WITH TEMPERATURE SET POINT ACCURACY TO 0.1°F.
3. LIMITING THE CHILLED FLUID TEMPERATURE PULL DOWN RATE AT START-UP TO AN ADJUSTABLE RANGE OF 0.2°F TO 2°F PER MINUTE TO PREVENT EXCESSIVE DEMAND SPIKES AT START-UP.
4. SEVEN DAY TIME SCHEDULE.
5. LEAVING CHILLED WATER PUMP START/STOP CONTROL AND PRIMARY/STANDBY SEQUENCING TO ENSURE EQUAL PUMP RUN TIME.
6. CHILLED WATER PUMP START/STOP CONTROL AND PRIMARY/STANDBY SEQUENCING TO ENSURE EQUAL PUMP RUN TIME.
7. DUAL CHILLER CONTROL FOR PARALLEL CHILLER APPLICATIONS WITHOUT ADDITION OF HARDWARE MODULES AND CONTROLS PANELS (ADDITIONAL THERMISTOR AND WELL SHALL BE REQUIRED).
8. UNOCCUPIED LOW SOUND OPERATION TO LIMIT CONDENSER FAN SOUND DURING SCHEDULED PERIODS.
9. TIMED MAINTENANCE SCHEDULING TO SIGNAL MAINTENANCE ACTIVITIES FOR PUMPS, CONDENSER COIL CLEANING, STRAINER MAINTENANCE AND USER DEFINED MAINTENANCE ACTIVITIES.
10. BOILER ENABLE SIGNAL TO INITIATE SYSTEM HEATING MODE.
11. LOW AMBIENT PROTECTION TO ENERGIZE COOLER AND HYDRONIC SYSTEM HEATERS.
12. PERIODIC PUMP START TO ENSURE PUMP SEALS ARE PROPERLY MAINTAINED DURING OFF-SEASON PERIODS.
2. DIAGNOSTICS:
A. THE CONTROL PANEL SHALL INCLUDE, AS STANDARD, A SCROLLING MARQUEE DISPLAY CAPABLE OF INDICATING THE SAFETY LOCKOUT CONDITION BY DISPLAYING A CODE FOR WHICH AN EXPLANATION MAY BE SCROLLED AT THE DISPLAY.
B. INFORMATION INCLUDED FOR DISPLAY SHALL BE:
(1) COMPRESSOR LOCKOUT.
(2) LOSS OF CHARGE.
(3) LOW FLUID FLOW.
(4) COOLER FREEZE PROTECTION.
(5) THERMISTOR MALFUNCTION.
(6) ENTERING AND LEAVING FLUID TEMPERATURE.
(7) EVAPORATOR AND CONDENSER PRESSURE.
(8) TIME OF DAY;
(A) DISPLAY MODULE, IN CONJUNCTION WITH THE MICROPROCESSOR, MUST ALSO BE CAPABLE OF DISPLAYING THE OUTPUT (RESULTS) OF A SERVICE TEST. SERVICE TEST SHALL VERIFY OPERATION OF EVERY SWITCH, THERMISTOR, FAN, AND COMPRESSOR BEFORE CHILLER IS STARTED.
(B) DIAGNOSTICS SHALL INCLUDE THE ABILITY TO REVIEW A LIST OF THE 20 MOST RECENT ALARMS WITH CLEAR LANGUAGE DESCRIPTIONS OF THE ALARM EVENT. DISPLAY OF ALARM CODES WITHOUT THE ABILITY FOR CLEAR LANGUAGE DESCRIPTIONS SHALL BE PROHIBITED.
(C) AN ALARM HISTORY BUFFER SHALL ALLOW THE USER TO STORE NO LESS THAN 20 ALARM EVENTS WITH CLEAT LANGUAGE DESCRIPTIONS, TIME AND DATE STAMP EVENT ENTRY.
(D) THE CHILLER CONTROLLER SHALL INCLUDE MULTIPLE CONNECTION PORTS FOR COMMUNICATING WITH THE LOCAL EQUIPMENT NETWORK, THE CARRIER COMFORT NETWORK® (CCN) SYSTEM AND THE ABILITY TO ACCESS ALL CHILLER CONTROL FUNCTIONS FROM ANY POINT ON THE CHILLER.
(E) THE CONTROL SYSTEM SHALL ALLOW SOFTWARE UPGRADE WITHOUT THE NEED FOR NEW HARDWARE MODULES.
3. SAFETIES:
A. UNIT SHALL BE EQUIPPED WITH THERMISTORS AND ALL NECESSARY COMPONENTS IN CONJUNCTION WITH THE CONTROL SYSTEM TO PROVIDE THE UNIT WITH THE FOLLOWING PROTECTIONS:
(1) LOSS OF REFRIGERANT CHARGE.
(2) REVERSE ROTATION.
(3) LOW CHILLED FLUID TEMPERATURE.
(4) THERMAL OVERLOAD.
(5) HIGH PRESSURE.
(6) ELECTRICAL OVERLOAD.
(7) LOSS OF PHASE.
B. CONDENSER FAN AND FACTORY PUMP MOTORS SHALL HAVE EXTERNAL OVERCURRENT PROTECTION.

2.06 ELECTRICAL REQUIREMENTS
1. UNIT PRIMARY ELECTRICAL POWER SUPPLY SHALL ENTER THE UNIT AT A SINGLE LOCATION.
2. PRIMARY ELECTRICAL POWER SUPPLY SHALL BE RATED TO WITHSTAND 120°F OPERATING AMBIENT.
3. UNIT SHALL OPERATE ON 3-PHASE POWER AT THE VOLTAGE SHOWN IN THE EQUIPMENT SCHEDULE.
4. CONTROL POINTS SHALL BE ACCESSED THROUGH TERMINAL BLOCK.
5. UNIT SHALL BE SHIPPED WITH FACTORY CONTROL AND POWER WIRING INSTALLED.
6. ACCESSORY STORAGE TANK COOLER HEATER REQUIRES A SEPARATE POWER SOURCE.

2.07 CHILLED WATER CIRCUIT:
1. CHILLED WATER CIRCUIT SHALL BE RATED FOR 300 PSIG. UNITS WITH OPTIONAL PUMP PACKAGE ARE RATED FOR 150 PSIG WORKING PRESSURE.
2. SOLID STATE FLOW MONITOR WITH INTEGRAL RELAY SHALL BE FACTORY INSTALLED AND WIRED.
3. BRASS BODY STRAINER WITH 20 MESH SCREEN AND BALL TYPE BLOW DOWN.
4. OPTIONAL HYDRONIC PACKAGE:
A. FIELD PIPE CONNECTIONS SHALL BE COPPER FTP TYPE.
B. OPTIONAL SINGLE OR PRIMARY/STAND-BY OPERATION PUMP SYSTEMS. DUAL PUMP SYSTEMS SHALL HAVE A PUMP DISCHARGE CHECK VALVE.
C. PUMPS SHALL BE SINGLE STAGE DESIGN, FOR INSTALLATION IN VERTICAL POSITION AND CAPABLE OF BEING SERVICED WITHOUT DISTURBING PIPING CONNECTIONS.
(1) PUMP CASING SHALL BE OF CLASS 30 CAST IRON.
(2) THE IMPELLER SHALL BE OF CAST BRONZE, CLOSED TYPE, DYNAMICALLY BALANCED, KEYED TO THE SHAFT AND SECURED BY LOCKING CAP SCREW.
(3) THE HYDRONIC KIT WILL BE PROVIDED WITH A FLUSH LINE CONNECTION TO ENSURE LUBRICATION AT THE SEAL FACE AND ALLOW FOR POSITIVE VENTING OF THE SEAL CHAMBER.
(4) PUMP SHALL BE RATED FOR 150 PSIG WORKING PRESSURE.
(5) THE PUMP CASE SHALL HAVE GAGE TAPPINGS AT THE SUCTION AND DISCHARGE NOZZLES AND INCLUDE DRAIN PORTS.
(6) MOTORS SHALL TOTALLY ENCLOSED 3-PHASE TYPE WITH GREASE LUBRICATED BALL BEARINGS.
(7) EACH PUMP SHALL BE FACTORY TESTED PER HYDRAULIC INSTITUTE STANDARDS.
D. FLUID EXPANSION TANK SHALL BE FACTORY INSTALLED WITHIN THE CHILLER CABINET INSULATED, PRE-CHARGED AND RATED FOR A MAXIMUM WORKING PRESSURE OF 150 PSIG.
E. WATER PRESSURE TAPS (2) SHALL BE FACTORY INSTALLED ACROSS THE COOLER AND RATED FOR 150 PSIG.
F. BALANCING VALVE SHALL BE FACTORY INSTALLED TO SET FLOW GAGE PORTS, SHALL BE FACTORY INSTALLED AND RATED FOR 300 PSIG.
G. HYDRONIC ASSEMBLY SHALL HAVE FACTORY SUPPLIED ELECTRIC FREEZE PROTECTION TO -20°F WHEN OPTIONAL HEATERS ARE USED.
H. PIPING SHALL BE TYPE-L SEAMLESS COPPER TUBING.

PART 3: EXECUTION

3.01 INSTALLATION

A. INSTALL IN STRICT ACCORDANCE WITH MANUFACTURER'S REQUIREMENTS, SHOP DRAWINGS, AND CONTRACT DOCUMENTS.

B. ADJUST AND LEVEL CHILLER IN ALIGNMENT ON SUPPORTS.

C. COORDINATE ELECTRICAL INSTALLATION WITH ELECTRICAL CONTRACTOR.

D. COORDINATE CONTROLS WITH CONTROL CONTRACTOR.

E. PROVIDE ALL APPURTENANCES REQUIRED ALLOWING A FULLY OPERATIONAL AND FUNCTIONAL CHILLER.

3.02 START-UP

A. ENSURE PROPER CHARGE OF REFRIGERANT AND OIL.

B. PROVIDE AUTHORIZED FACTORY START-UP BY FACTORY TRAINED TECHNICIANS FOR EACH CHILLER. TECHNICIAN SHALL PROVIDE INSTRUCTION TO THE OWNER ON PROPER OPERATION AND MAINTENANCE DURING START-UP.

SECTION 23 73 00

INDOOR CENTRAL-STATION AIR-HANDLING UNITS

PART 1 GENERAL

1.01 SUMMARY

A. SECTION INCLUDES MODULAR FACTORY FABRICATED AIR-HANDLING UNITS AND ACCESSORIES.1.02 SUBMITTALS

A. SHOP DRAWINGS: INDICATE ASSEMBLY, UNIT DIMENSIONS, WEIGHT LOADING, REQUIRED CLEARANCES, CONSTRUCTION DETAILS, FIELD CONNECTION DETAILS, AND ELECTRICAL CHARACTERISTICS AND CONNECTION REQUIREMENTS.

B. PRODUCT DATA, SUBMIT THE FOLLOWING:
1. PUBLISHED LITERATURE: INDICATE CAPACITIES, RATINGS, GAGES AND FINISHES OF MATERIALS, AND ELECTRICAL CHARACTERISTICS AND CONNECTION REQUIREMENTS.
2. FILTERS: DATA FOR FILTER MEDIA, FILTER PERFORMANCE DATA, FILTER ASSEMBLY, AND FILTER FRAMES.
3. FANS: PERFORMANCE AND FAN CURVES WITH SPECIFIED OPERATING POINT PLOTTED, POWER, RPM.
4. SOUND POWER LEVEL DATA: FAN OUTLET AND CASING RADIATION AT RATED CAPACITY.
5. ELECTRICAL REQUIREMENTS: POWER SUPPLY WIRING INCLUDING WIRING DIAGRAMS FOR INTERLOCK AND CONTROL WIRING. INDICATE FACTORY INSTALLED AND FIELD INSTALLED WIRING.

C. MANUFACTURER'S INSTALLATION INSTRUCTIONS: SUBMIT.

1.03 CLOSEOUT SUBMITTALS

A. OPERATION AND MAINTENANCE DATA: SUBMIT INSTRUCTIONS FOR LUBRICATION, FILTER REPLACEMENT, MOTOR AND DRIVE REPLACEMENT, SPARE PARTS LISTS, AND WIRING DIAGRAMS.

1.04 WARRANTY

A. FURNISH ONE YEAR MANUFACTURER WARRANTY FOR AIR HANDLING UNITS.

PART 2 PRODUCTS

2.01 AIR HANDLING UNITS

A. MANUFACTURERS:
1. THE TRANE COMPANY.
2. CARRIER CORP.
3. YORK BY JOHNSON CONTROLS.

B. CONFIGURATION: FAN SECTION PLUS ACCESSORIES, INCLUDING:
1. VERTICAL COOLING COIL SECTION.

C. PERFORMANCE BASE: SEA LEVEL PRESSURE OR ALTITUDE.

D. FABRICATION: CONFORM TO AMCA 99 AND ARI 430.

2.02 CASING

A. CHANNEL BASE OF WELDED STEEL. ASSEMBLE SECTIONS WITH GASKETS AND BOLTS.

B. OUTSIDE CASING:
1. GALVANIZED STEEL: 18 GAUGE.

C. INSIDE CASING:
1. GALVANIZED STEEL: 18 GAUGE.

D. INSULATION: FOAM INJECTED BETWEEN INSIDE AND OUTSIDE CASINGS.
1. 'K' FACTOR AT 75 DEGREES F: MAXIMUM 0.26 BTUH INCH/ SQ FT/ DEGREES F.
2. DENSITY: 2 INCH THICK.

E. INSPECTION DOORS: GALVANIZED STEEL FOR FLUSH MOUNTING, WITH GASKET, LATCH, AND HANDLE ASSEMBLY.

F. DRAIN PANS: DOUBLE THICKNESS STAINLESS STEEL WITH INSULATION BETWEEN LAYERS WITH WELDED CORNERS. CROSS BREAK AND PITCH TO DRAIN CONNECTION. FURNISH DRAIN PANS UNDER COOLING COIL SECTION.
I. STRENGTH: FURNISH STRUCTURE TO BRACE CASINGS FOR SUCTION PRESSURE OF 4 INCH WG, WITH MAXIMUM DEFLECTION OF 1 IN 200.

2.03 FANS

A. TYPE: FORWARD CURVED.

B. PERFORMANCE RATINGS: CONFORM TO AMCA 210 AND LABEL WITH AMCA CERTIFIED RATING SEAL.

C. SOUND RATINGS: AMCA 301, TESTED TO AMCA 300 AND LABEL WITH AMCA CERTIFIED SOUND RATING SEAL.

D. BEARINGS: SELF-ALIGNING, GREASE LUBRICATED, BALL OR ROLLER BEARINGS WITH LUBRICATION FITTINGS EXTENDED TO EXTERIOR OF CASING WITH COPPER TUBE AND GREASE FITTING RIGIDLY ATTACHED TO CASING.

E. MOUNTING: LOCATE FAN AND MOTOR INTERNALLY ON WELDED STEEL BASE COATED WITH CORROSION RESISTANT PAINT. FACTORY MOUNT MOTOR ON SLIDE RAILS. FURNISH ACCESS TO MOTOR, DRIVE, AND BEARINGS THROUGH HINGED ACCESS DOORS. MOUNT BASE ON VIBRATION ISOLATORS.

2.04 MOTORS

A. FACTORY INSTALL ALL MOTORS ON SLIDE BASE TO PERMIT ADJUSTMENTS OF BELT TENSION.

B. FAN MOTORS SHALL BE HEAVY DUTY, HIGH EFFICIENCY, OPEN DRIP-PROOF, OPERABLE AT SCHEDULED VOLTAGE.

2.05 BEARINGS AND DRIVES

A. BEARINGS: PILLOW BLOCK TYPE, SELF-ALIGNING, GREASE-LUBRICATED L-50 LIFE AT 200,000 HOURS WITH EXTENDED LUBE LINES.

B. SHAFTS: SOLID, HOT ROLLED STEEL, GROUND AND POLISHED, WITH KEY-WAY, AND PROTECTIVELY COATED WITH LUBRICATING OIL.

C. V-BELT DRIVE: CAST IRON OR STEEL SHEAVES, DYNAMICALLY BALANCED, BORED TO FIT SHAFTS, AND KEYED. VARIABLE AND ADJUSTABLE PITCH SHEAVES FOR MOTORS 15 HP AND UNDER SELECTED SO REQUIRED RPM IS OBTAINED WITH SHEAVES SET AT MID-POSITION; MATCHED BELTS, AND DRIVE RATED AS RECOMMENDED BY MANUFACTURER OR MINIMUM 1.5 TIMES NAMEPLATE RATING OF MOTOR.

2.06 COILS

A. STAINLESS STEEL CASING WITH ACCESS TO BOTH SIDES OF COILS. ENCLOSE COILS WITH HEADERS AND RETURN BENDS FULLY CONTAINED WITHIN CASING. SLIDE COILS INTO CASING THROUGH REMOVABLE END PANEL WITH BLANK OFF SHEETS AND SEALING COLLARS AT CONNECTION PENETRATIONS.

B. AIR COILS: CERTIFY CAPACITIES, PRESSURE DROPS, AND SELECTION PROCEDURES IN ACCORDANCE WITH ARI 410.C. FABRICATION:
1. TUBES: 5/8 INCH OD SEAMLESS COPPER EXPANDED INTO FINS, BRAZED JOINTS.
2. FINS: ALUMINUM.
3. CASING: DIE FORMED CHANNEL FRAME OF GALVANIZED STEEL.

C. WATER COOLING AND HEATING COILS:
1. HEADERS: STAINLESS STEEL.
2. CONFIGURATION: DRAINABLE, WITH THREADED PLUGS FOR DRAIN AND VENT; THREADED PLUGS IN RETURN BENDS AND IN HEADERS OPPOSITE EACH TUBE.

2.07 FILTERS

A. FILTER BOX: SECTION WITH FILTER GUIDES, ACCESS DOORS FROM BOTH SIDES, FOR SIDE LOADING WITH GASKETS AND BLANK-OFF PLATES.

B. FILTERS: 2-ICH PLEATED, MERV 7.

C. FILTER GAUGES: MAGNAHELIC GAUGE.

PART 3 EXECUTION

3.01 INSTALLATION

A. INSTALL IN ACCORDANCE WITH ARI 430.

B. INSTALL FLOOR MOUNTED UNITS ON CONCRETE HOUSEKEEPING PADS AT LEAST 3-1/2 INCHES HIGH AND 6 INCHES WIDER THAN UNIT.

C. INSULATE COIL HEADERS LOCATED OUTSIDE AIRFLOW AS SPECIFIED FOR PIPING. REFER TO SECTION 15081.

D. INSTALL CONDENSATE PIPING WITH TRAP AND ROUTE FROM DRAIN PAN THROUGH FLOOR SLAB AND SPILL ON GRADE BELOW SLAB.

3.02 INSTALLATION OF CHILLED WATER AND HOT WATER COOLING COILS

A. MAKE CONNECTIONS TO COILS WITH UNIONS.

B. CONNECT WATER SUPPLY TO LEAVING AIRSIDE OF COIL (COUNTER FLOW ARRANGEMENT).

C. LOCATE WATER SUPPLY AT BOTTOM OF SUPPLY HEADER AND RETURN WATER CONNECTION AT TOP.

D. INSTALL WATER COILS TO ALLOW DRAINING AND INSTALL DRAIN CONNECTION AT LOW POINTS.

E. INSTALL VALVES AND PIPING SPECIALTIES IN ACCORDANCE WITH DETAILS AS INDICATED ON DRAWINGS.

F. INSTALL MANUAL AIR VENTS AT HIGH POINTS COMPLETE WITH SHUTOFF VALVE.

3.03 DEMONSTRATION

A. DEMONSTRATE UNIT OPERATION AND MAINTENANCE.

3.04 PROTECTION OF FINISHED WORK

A. DO NOT OPERATE UNITS UNTIL DUCTWORK IS CLEAN, FILTERS ARE IN PLACE, BEARINGS LUBRICATED, AND FAN HAS BEEN TEST RUN UNDER OBSERVATION.

SECTION 23 81 51

KITCHEN HOOD(S):

1.0 KITCHEN VENTILATION HOOD(S) SHALL BE THE TYPE I, FULL COMPENSATING WALL CANOPY GROUP WITH THE CAPABILITY TO REPLACE 90% OF THE EXHAUSTED AIR WITH FRESH OUTSIDE AIR. THE HOOD(S) SHALL BE U.L. LISTED WITHOUT (WITH) FIRE DAMPER FOR 400F, 600F, OR 700F RATED COOKING APPLIANCES. AIR SHALL BE SUPPLIED THROUGH PERFORATED PANELS IN A MANNER THAT DOES NOT INTERFERE WITH THE COOKING OPERATIONS BENEATH THE HOOD(S).

THE HOOD(S) EXTERIOR SHALL BE CONSTRUCTED OF A MINIMUM OF 18 GAUGE STAINLESS STEEL. THE HOOD(S) SHALL BE CONSTRUCTED USING THE STANDING SEAM METHOD FOR OPTIMUM STRENGTH. AN INTEGRAL 3 INCH AIR SPACE IS PROVIDED TO MEET NFPA 96 CLEARANCE REQUIREMENTS AGAINST LIMITED COMBUSTIBLES WALLS. ALL SEAMS, JOINTS AND PENETRATIONS OF THE HOOD ENCLOSURE SHALL BE WELDED AND/OR LIQUID TIGHT. LIGHTER MATERIAL GAUGES, ALTERNATE MATERIAL TYPES AND FINISHES ARE NOT ACCEPTABLE. ALL UNEXPOSED INTERIOR SURFACES SHALL BE CONSTRUCTED OF A MINIMUM 18 GAUGE CORROSION RESISTANT STEEL INCLUDING, BUT NOT LIMITED TO DUCTS, PLENUM, AND BRACKETS.

VAPORPROOF, U.L. LISTED INCANDESCENT LIGHT FIXTURES SHALL BE PREWIRED TO A JUNCTION BOX SITUATED AT THE TOP OF THE HOOD FOR FIELD CONNECTION. WIRING SHALL CONFORM TO THE REQUIREMENTS OF THE NATIONAL ELECTRICAL CODE (NFPA #70-LATEST EDITION).

THE CANOPY HOOD(S) SHALL BE BUILT IN ACCORDANCE WITH NATIONAL FIRE PROTECTION ASSOCIATION (NFPA) BULLETIN #96, INTERNATIONAL MECHANICAL CODE (IMC), INTERNATIONAL CONFERENCE OF BUILDING OFFICIALS (ICBO), BUILDING OFFICIALS AND CODE ADMINISTRATORS (BOCA), SOUTHERN BUILDING CODE CONGRESS INTERNATIONAL (SBCCI), AND BEAR THE NATIONAL SANITATION FOUNDATION (NSF) SEAL OF APPROVAL. THE HOOD MANUFACTURER SHALL PROVIDE, ON REQUEST, THE NECESSARY DATA THAT CONFIRMS COMPLIANCE WITH THE CODE AUTHORITIES LISTED ABOVE.

2.0 THE HOOD(S) SHALL CONTAIN A FACTORY ENGINEERED AND PRE-PIPED, UL LISTED, WET CHEMICAL, ANSUL R-102 FIRE SUPPRESSION SYSTEM. THE SYSTEM PIPING SHALL BE INSTALLED IN THE HOOD AT THE TIME OF CONSTRUCTION ABOVE THE HOOD OR WITHIN THE SUPPLY PLENUM, AND SHALL BE CONCEALED FROM VIEW. NO EXPOSED PIPING IS ACCEPTABLE, WITH THE EXCEPTION OF APPLIANCE DROPS. A CERTIFIED LOCAL ANSUL DISTRIBUTOR SHALL BE SELECTED BY THE FACTORY FOR FINAL SYSTEM HOOK-UP.

THE SYSTEM SHALL BE CAPABLE OF AUTOMATIC DETECTION AND ACTUATION AND/OR REMOTE MANUAL ACTUATION. THE SYSTEM SHALL HAVE THE FIRE SUPPRESSION CAPABILITIES TO PROTECT THE DUCT(S), PLENUM(S), FILTER AREA(S) AND COOKING EQUIPMENT. ACCESSORIES SHALL BE AVAILABLE FOR MECHANICAL OR ELECTRICAL GAS LINE SHUT-OFF APPLICATIONS AND A DOUBLE-POLE, DOUBLE-THROW MICROSWITCH FOR ACTIVATION OF A SHUNT TRIP BREAKER (PROVIDED BY OTHERS) FOR ELECTRICAL EQUIPMENT. THE SYSTEM SHALL ALSO INCLUDE THE RELEASE ASSEMBLY, AGENT TANK, DETECTORS, FUSIBLE LINKS, LIQUIDTIGHT FITTINGS, REMOTE MANUAL PULL STATION, AND SCHEDULE 40 BLACK IRON PIPE WITH CHROME SLEEVING FOR EXPOSED AREAS.

THE PRE-PIPE ONLY SYSTEM INCLUDES SCHEDULE 40 BLACK IRON PIPE, DETECTORS, NOZZLES, AND CHROME APPLIANCE DROPS. THE REMAINDER OF THE SYSTEM IS NOT INCLUDED AND IS UNDER SEPARATE CONTRACT BY OTHERS.

GRINER ENGINEERING, INC.
1628 First Avenue North
St. Petersburg, Florida 33713
Phone: (727)-822-2335
Fax: (727)-821-3361
Certificate of Authorization #3173

Date	06-15-2017
Drawn	JL
Designed	JL
EOR	JHG
Job no.	17049

CITY OF TAMPA
CONTRACT ADMINISTRATION DEPARTMENT
PLANNING AND DESIGN DIVISION
306 E. JACKSON STREET 4 NORTH
TAMPA, FLORIDA 33602
p: 813. 274. 8456 - f: 813. 274. 8080
url: www.tampagov.net

James E. Jackson, Jr. AIA, NOMA
City Architect
Edward D. Rice, AIA
Project Architect
Kevin L. Henika, AIA
Project Architect
Thomas A. Hester, Sr., AIA, NOMA
Project Architect
David R. Pagitt
Supervisor, Architectural Drafting
Kinsey C. Tillman
Drafting Technician
Jerry P. Sanders
Drafting Technician
Byron K. Thomas, LEED AP
Drafting Technician

MEP CONSULTANT
GRINER ENGINEERING, INC.
1628 1st. AVENUE NORTH
ST. PETERSBURG, FL 33713

STRUCTURAL CONSULTANT
BILLER REINHART
STRUCTURAL GROUP, INC.
4014 GUNN HWY. SUITE 248
TAMPA, FL 33713

CIVIL CONSULTANT
5 M CIVIL LLC
12315 WYCLIFF PLACE
TAMPA, FL 33626

LANDSCAPE CONSULTANT
DAVID CONNER & ASSOCIATES
1809 W. SWANN AVENUE,SUITE 255
TAMPA, FL 33606

FIRE STATION 23
20770 TROUT CREEK DR.
TAMPA, FL 33647

DPW FILE NUMBER

DPW NUMBER
17-C-00037

ISSUE DATE
07-28-2017

DRAWN BY

REVISIONS

SEAL

Joseph H. Griner III, P.E. FL. 39491

SCALE: N.T.S.

MECHANICAL SPECIFICATIONS

SHEET NUMBER
M-7.3
X OF X

PLUMBING ABBREVIATIONS

ABBREVIATION	DESCRIPTION
ADA	AMERICAN DISABILITIES ACT
A.F.F.	ABOVE FINISHED FLOOR
A.F.G.	ABOVE FINISHED GRADE
B.F.F.	BELOW FINISHED FLOOR
BFP	BACKFLOW PREVENTER
BIV	BUTTERFLY INDICATING VALVE
BLDG	BUILDING
BTU	BRITISH THERMAL UNIT
BTUH	BRITISH THERMAL UNITS PER HOUR
C.E.	CIVIL ENGINEER
CONT	CONTINUED
COP	CLEANOUT PLUG
CPVC	CHLORINATED POLYVINYL CHLORIDE
CV	CHECK VALVE
CW	COLD WATER
D.F.U.	DRAINAGE FIXTURE UNITS
DIA.	DIAMETER
DN	DOWN
DWG	DRAWING
EA	EACH
E.C.	ELECTRICAL CONTRACTOR
EWH	ELECTRIC WATER HEATER
EX.	EXISTING
FCO	FLOOR CLEANOUT
FD	FLOOR DRAIN
FDF	FLOOR DRAIN WITH FUNNEL
FDF-R	FLOOR DRAIN WITH ROUND FUNNEL
F.F.	FINISHED FLOOR
F.F.E.	FINISHED FLOOR ELEVATION
FLR.	FLOOR
F.P.C.	FIRE PROTECTION CONTRACTOR
FS	FLOOR SINK
FSB	FLOOR SINK WITH SEDIMENT BUCKET
FSH	FLOOR SINK WITH HALF GRATE
FSQ	FLOOR SINK WITH THREE-QUARTER GRATE
FT	FEET
F.U.	FIXTURE UNITS
GAL	GALLONS
G.C.	GENERAL CONTRACTOR
GPF	GALLONS PER FLUSH
GPH	GALLONS PER HOUR
GPM	GALLONS PER MINUTE
GWH	GAS WATER HEATER
HD	HUB DRAIN
HP	HORSEPOWER
HR	HOUR
HW	HOT WATER
HWR	HOT WATER RECIRCULATION
KW	KILOWATTS
MAX.	MAXIMUM
MBTUH	THOUSANDS OF BTU PER HOUR
M.C.	MECHANICAL CONTRACTOR
MIN.	MINIMUM
MISC.	MISCELANNEOUS
NC	NORMALLY CLOSED
N.I.C.	NOT IN CONTRACT
NO	NORMALLY OPEN
NTS	NOT TO SCALE
P.C.	PLUMBING CONTRACTOR
P.R.A.	PROJECTED ROOF AREA
PSI	POUNDS PER SQUARE INCH
PVC	POLYVINYL CHLORIDE
RAD.	RADIUS
RD	ROOF DRAIN
RO	ROOF OVERFLOW
RPBFP	REDUCED PRESSURE BACKFLOW PREVENTER
RL	RAINWATER LEADER
S.C.	SITE CONTRACTOR
SF	SQUARE FEET
SS	SANITARY SEWER STACK
TB	THRUST BLOCK
TD	TRENCH DRAIN
TP	TRAP PRIMER
TYP.	TYPICAL
U.O.N.	UNLESS OTHERWISE NOTED
V	VENT
VB	VACUUM BREAKER
V.I.F.	VERIFY IN FIELD
VS	VENT STACK
VTR	VENT THROUGH ROOF
WCO	WALL CLEANOUT
WH	WALL HYDRANT
WS	WASTE STACK
YCO	YARD CLEANOUT
ø	DIAMETER

PLUMBING SYMBOL LEGEND

SYMBOL	DESCRIPTION
	AIR ADMITTING VALVE IN BOX
	AIR ADMITTING VALVE
	BALANCING VALVE
	BALL VALVE
	VALVE IN UNDERGROUND BOX
	BACKWATER VALVE
	BACKWATER VALVE BELOW GRADE WITH EXTENSION
	BACKWATER VALVE IN UNDERGROUND BOX
	BUTTERFLY VALVE
	CHECK VALVE
	COMPRESSED AIR CONNECTION
	GAS VALVE
	GLOBE VALVE
	MODULATING VALVE
	PRESSURE RELIEF VALVE
	RELIEF VALVE
	SOLENOID VALVE
	THERMOSTATIC MIXING VALVE
	GATE VALVE
	SUPPLY VALVE
	WATER METER
	GAS METER
	REDUCED PRESSURE BACKFLOW PREVENTER
	CLOTHES WASHER CONNECTION
	FLOOR CLEANOUT
	WALL CLEANOUT
	YARD CLEANOUT
	FLOOR DRAIN
	FLOOR DRAIN WITH FUNNEL
	FLOOR DRAIN WITH ROUND FUNNEL
	FLOOR SINK WITH FULL GRATE
	FLOOR SINK WITH HALF GRATE
	FLOOR SINK WITH THREE-QUARTER GRATE
	HUB DRAIN
	ROOF DRAIN
	ROOF OVERFLOW DRAIN
	TRENCH DRAIN
HB	HOSE BIBB
	POINT OF NEW CONNECTION
	VENT THROUGH ROOF
	RECIRCULATION PUMP
	WATER HAMMER ARRESTOR
	SPLASH BLOCK
TP	TRAP PRIMER
	"P" TRAP
WH	WALL HYDRANT
	ATMOSPHERIC VACUUM BREAKER
	PIPE DOWN
	PIPE UP
	CAPPED PIPE
	CLEANOUT PLUG
	UNION
	STRAINER
	DIRECTION OF FLOW
XXX	PLUMBING FIXTURE
XXX-A	ADA COMPLIANT PLUMBING FIXTURE
	EXISTING FIXTURE/FIXTURE PROVIDED BY OTHERS
	FIXTURE PROVIDED BY PLUMBING CONTRACTOR

NOTE:
SOME SYMBOLS AND ABBREVIATIONS SHOWN MAY NOT PERTAIN TO THIS PROJECT.

PLUMBING LINETYPE LEGEND

LINETYPE	DESCRIPTION
	EXISTING SANITARY SEWER PIPING
	EXISTING SANITARY VENT PIPING
	EXISTING DOMESTIC COLD WATER PIPING
	EXISTING DOMESTIC HOT WATER PIPING
	EXISTING HOT WATER RECIRCULATION PIPING
— — ST — —	EXISTING STORM PIPING
— — RO — —	EXISTING ROOF OVERFLOW PIPING
—— EG ——	EXISTING NATURAL GAS PIPING
—— ELP ——	EXISTING LP GAS PIPING
— — EA — —	EXISTING MEDICAL AIR PIPING
— —EAW— —	EXISTING ACID WASTE PIPING
— —EAV— — —	EXISTING ACID VENT PIPING
——ECO2——	EXISTING MEDICAL CO2 PIPING
— —EVAC— —	EXISTING MEDICAL EVAC VACUUM PIPING
— — EV — — —	EXISTING MEDICAL VACUUM PIPING
— — EN — — —	EXISTING NITROGEN PIPING
— —ENO— — —	EXISTING NITROUS OXIDE PIPING
— — EO — — —	EXISTING OXYGEN PIPING
—— EDI ——	EXISTING DEIONIZED WATER PIPING
—— ERO ——	EXISTING REVERSE OSMOSIS PIPING
— —EGR— —	EXISTING GREASE WASTE PIPING
-----FOR-----	FUEL OIL RETURN PIPING
—— FOS ——	FUEL OIL SUPPLY PIPING
	SANITARY SEWER PIPING (ABOVE GROUND)
	SANITARY SEWER PIPING (BELOW GROUND)
	SANITARY VENT PIPING
	DOMESTIC COLD WATER PIPING
	DOMESTIC HOT WATER PIPING
	HOT WATER RECIRCULATION PIPING
—— ST ——	STORM PIPING
—— RO ——	ROOF OVERFLOW PIPING
—— G ——	NATURAL GAS PIPING
—— LP ——	LP GAS PIPING
—— A ——	MEDICAL AIR PIPING
—— AW ——	ACID WASTE PIPING
— — AV — — —	ACID VENT PIPING
—— CO2 ——	MEDICAL CO2 PIPING
— — VAC— — —	MEDICAL EVAC VACUUM PIPING
— — V — — —	MEDICAL VACUUM PIPING
—— N ——	NITROGEN PIPING
—— NO ——	NITROUS OXIDE PIPING
—— O ——	OXYGEN PIPING
—— DI ——	DEIONIZED WATER PIPING
—— RO ——	REVERSE OSMOSIS PIPING
—— GR ——	GREASE WASTE PIPING
—— CD ——	CONDENSATE PIPING
—— FM ——	FORCED MAIN PIPING
—— ID ——	INDIRECT DRAIN PIPING
—— CA ——	COMPRESSED AIR PIPING
—— GW ——	GRAY WATER WASTE PIPING

PIPE HANGER SPACING TABLE

PIPE MATERIAL	PIPE SIZES (INCHES)	HORIZONTAL PIPE MAX. HANGER DISTANCE (FEET)	VERTICAL PIPE MAX. HANGER DISTANCE (FEET)
COPPER & COPPER ALLOY TUBING	1¼" & SMALLER	6	10
COPPER & COPPER ALLOY TUBING	1½" & LARGER	10	10
COPPER & COPPER ALLOY PIPE	ALL	12	10
CAST IRON PIPE	ALL	4 *	15
STEEL PIPE	ALL	12	15
STAINLESS STEEL DRAINAGE SYSTEM	ALL	10	10 **
CPVC & PVC PIPE	ALL	4	10 **

NOTES:

* MAXIMUM HORIZONTAL SPACING OF CAST IRON PIPE HANGERS SHALL BE INCREASED TO TEN FEET WHERE 10' LENGTHS OF PIPE ARE USED.

** MIDSTORY GUIDE FOR SIZES 2" AND SMALLER

*** NOT ALL PIPE MATERIALS ON THIS TABLE WILL PERTAIN TO THIS PROJECT

ALL MATERIAL, DEVICES, AND EQUIPMENT MUST COMPLY WITH BUY AMERICAN REQUIREMENTS OF AMERICAN RECOVERY & REINVESTMENT ACT.

PLUMBING GENERAL NOTES:

1. THE PLUMBING CONTRACTOR SHALL VERIFY THESE DRAWINGS WITH EXISTING FIELD CONDITIONS AND SHALL COORDINATE WITH CIVIL ENGINEER LOCATIONS AND ELEVATIONS OF PLUMBING SERVICE LINES BEFORE PROCEEDING WITH CONSTRUCTION. THE WATER, SANITARY SEWER, STORM & GAS SERVICE LINES SHOWN ON THE DRAWINGS ARE FOR REFERENCE & BUILDING PERMIT ONLY. REFER TO CIVIL ENGINEERS DRAWINGS FOR DRAINAGE & WATER SERVICE LINES LAY-OUT & DETAILS
2. PLUMBING CONTRACTOR SHALL FURNISH AND INSTALL COMPLETE SANITARY AND DOMESTIC WATER PIPING SYSTEMS; INCLUDING ALL ASSOCIATED DEVICES, EQUIPMENT, CONTROLS, CONNECTIONS TO BUILDING SERVICE LINES, SUPPORTS, AND HARDWARE REQUIRED FOR THE SATISFACTORY OPERATION OF THE SYSTEMS.
3. PLUMBING CONTRACTOR SHALL PROVIDE ROUTING AND OFFSETS NECESSARY TO AVOID CONFLICT WITH STRUCTURE, FINISHES AND WORK OF OTHER TRADES AS REQUIRED.
4. PIPING SYSTEMS SHOWN ARE DIAGRAMATIC AND ARE NOT INTENDED TO INDICATE EXACT INSTALLED LOCATIONS OR CONFIGURATIONS.
5. COORDINATE EXACT LOCATION, SIZE AND ELEVATIONS OF ANY REQUIRED PIPE SLEEVES IN NEW STRUCTURE WITH STRUCTURAL ENGINEER.
6. BAND IRON, TIE WIRE, METAL STRAPPING OR WIRE STRAPPING SHALL NOT BE PERMITTED TO SUPPORT PIPING OR EQUIPMENT.
7. INSTALL ALL PIPING TO ALLOW FOR FUTURE EXPANSION.
8. ALL HOT WATER COPPER PIPING TO BE INSULATED WITH 1" PIPE INSULATION.
9. ALL OPENINGS THROUGH FIRE RATED WALLS OR FLOORS SHALL BE SEALED AS PER U.L. LISTED PENETRATION AND SHALL MAINTAIN THE FIRE RATED INTEGRITY OF THE WALL OR FLOOR. THE CONTRACTOR SHALL VERIFY FIRE RATINGS WITH ARCHITECTURAL DRAWINGS PRIOR TO INSTALLATION.
10. PROVIDE ACCESS PANELS AT ALL PLACES WHERE EQUIPMENT AND DEVICES REQUIRING SERVICE ARE CONCEALED BEHIND INACCESSIBLE CEILINGS AND WALLS. SUCH DEVICES INCLUDE, BUT ARE NOT LIMITED TO, CLEANOUTS, WATER HAMMER ARRESTORS AND VALVES. COORDINATE EXACT LOCATION WITH ARCHITECT PRIOR TO ROUGH-IN.
11. CONSTRUCTION AND THICKNESS OF WALLS AND PARTITIONS FOR PLUMBING PIPING OR EQUIPMENT SHALL BE AS REQUIRED BY PLUMBING EQUIPMENT MANUFACTURER'S INSTALLATION REQUIREMENTS AND INSTRUCTIONS.
12. ALL PIPING AND FITTINGS EXPOSED TO VIEW SHALL HAVE A POLISHED CHROME FINISH UNLESS OTHERWISE NOTED.
13. ALL PLUMBING WORK SHALL COMPLY WITH FLORIDA BUILDING CODES -BUILDING, -PLUMBING, - MECHANICAL, AND -FUEL GAS CODE; LATEST EDITION WITH LATEST AMENDMENTS (INCLUDING LOCAL) AND ALL OTHER CODES RECENTLY ADAPTED BY STATE FIRE MARSHALL'S RULE.
14. COORDINATE EXACT LOCATIONS OF FLOOR DRAINS, WATER STUB UP, AND GAS STUB UP IN POOL EQUIPMENT ROOM WITH POOL CONTRACTOR BEFORE ROUGH-IN.

DOMESTIC WATER PIPING NOTES:

1. BELOW GROUND WATER PIPING SHALL BE TYPE "K" COPPER WITH VINYL SLEEVE FOR CORROSION PROTECTION WITH WROUGHT COPPER FITTINGS AND LEAD FREE 95-5 SOLDERED JOINTS.
2. ABOVE GROUND WATER PIPING SHALL BE TYPE "L" COPPER.
3. THE SITE SUBCONTRACTOR SHALL PROVIDE THE BACKFLOW PREVENTOR AND THE WATER METER.
4. PROVIDE EACH FIXTURE WITH STOPS AND SUPPLIES. EXPOSED STOPS AND SUPPLIES SHALL BE CHROME PLATED WITH A CHROME PLATED ESCUTCHEON PLATE.
5. PROVIDE UNIONS FOR ALL CONNECTIONS TO EQUIPMENT. PROVIDE DIELECTRIC TYPE WHERE DISSIMILAR METALS ARE CONNECTED.
6. INSULATE ALL HOT WATER PIPING WITH 1" THICK, 3½ LB DENSITY, RIGID FIBERGLASS INSULATION. INSULATE FITTINGS, VALVES AND ALL SIMILAR ITEMS. INSULATE WATER PIPE AND P-TRAP ELBOW AT ALL ADA COMPLIANT LAVATORIES.
7. PROVIDE WATER HAMMER PROTECTION (PRECISION PLUMBING PRODUCTS SERIES "SWA" OR EQUAL) AT EACH FIXTURE OR GROUP OF SIMILAR FIXTURES. FIELD FABRICATED MODELS ARE NOT ACCEPTABLE.
8. PROVIDE VACUUM BREAKERS AS REQUIRED BY CODE.
9. PROVIDE TRAP PRIMERS FOR ALL FLOOR DRAINS AS REQUIRED BY CODE.
10. TEST ALL WATER PIPING AT 100 PSI FOR TWENTY FOUR HOURS AS REQUIRED BY CODE.
11. STERILIZE ALL WATER PIPING IN ACCORDANCE WITH HEALTH DEPARTMENT REGULATIONS AND AMERICAN WATER WORKS SPECIFICATIONS.
12. SUPPORT ALL WATER PIPING WITH PIPE HANGERS BY GRINNELL OR APPROVED EQUAL.
13. PROVIDE ACCESS PANELS FOR ANY VALVES CONCEALED IN WALLS OR CEILING SPACE.

SANITARY WASTE & VENT PIPING NOTES:

1. SANITARY WASTE AND VENT PIPING SHALL BE SCHEDULE 40 PVC (ASTM-2665) WITH APPROVED PVC SOLVENT WELDED FITTINGS. PVC PIPING SHALL NOT BE RUN IN RETURN AIR PLENUMS OR FIRE RATED ASSEMBLIES. ANY PIPING LOCATED WITHIN PLENUM SPACES OR FIRE RATED WALLS SHALL BE SERVICE WEIGHT CAST IRON, NO HUB, WITH STAINLESS STEEL CLAMPS AND SHIELDS WITH NEOPRENE SEALING SLEEVES.
2. ALL SANITARY WASTE PIPING UP TO 2½" IN SIZE SHALL BE SLOPED AT ¼" PER FOOT SLOPE. ALL LARGER SANITARY WASTE PIPING SHALL BE SLOPED AT ⅛" PER FOOT SLOPE.
3. ALL VENTS THROUGH THE ROOF SHALL BE A MINIMUM OF 10'-0", OR AS REQUIRED BY CODE, AWAY FROM ANY OPENINGS INTO THE BUILDING AND FRESH AIR INTAKES.
4. ALL VENTS THROUGH THE ROOF SHALL BE PROVIDED WITH FOUR LB SHEET LEAD FLASHING EXTENDING UPWARD AROUND THE PIPE AND TURNED DOWN INSIDE THE PIPE.
5. ALL EXPOSED WASTE DRAINS OR PIPING SHALL BE CHROME PLATED WITH MATCHING ESCUTCHEONS.
6. CLEANOUTS SHALL BE PROVIDED AT THE BASE OF EACH SANITARY WASTE OR SOIL STACK AT A MINIMUM OF 18" A.F.F. PER THE LATEST EDITION OF THE PLUMBING CODE.
7. TEST SANITARY WASTE AND VENT PIIPING BY MEANS OF A 10" WATER COLUMN FOR 24 HOURS OR AS REQUIRED BY THE LOCAL AUTHORITY.

GAS PIPING NOTES:

1. GAS PIPING SHALL BE INSTALLED IN ACCORDANCE WITH THE FLORIDA BUILDING CODE OR NFPA-54 WHERE REQUIREMENTS ARE MORE STRINGENT.
2. ALL GAS EQUIPMENT SHALL BE AGA APPROVED.
3. THE INSTALLATION SHALL BE FOR UNDILUTED PROPANE.
4. THE INSTALLATION SUBCONTRACTOR SHALL BE LICENSED FOR THE INSTALLATION OF UNDILUTED PROPANE.
5. GAS PIPING SHALL BE SCHEDULE 40, WELDED AND SEAMLESS, WROUGHT STEEL PIPE (ASME B36, 10). ANY GAS PIPING WHICH IS EXPOSED SHALL BE PAINTED WITH "RUSTOLEUM" PAINT. VERIFY COLOR WITH ARCHITECT.
6. GAS PIPING SHALL BE HUNG TIGHT TO THE ROOF STRUCTURE, SUPPORTED WITH HANGERS BY GRINNELL OR EQUAL.
7. BRANCH TAPS MUST BE MADE OFF OF THE TOP OF THE PIPING.
8. CONNECTION TO EACH PIECE OF EQUIPMENT SHALL INCLUDE AN INVERTED TRAP, A GAS VALVE, A UNION AND A DIRT LEG.
9. ALL GAS FLUES SHALL BE A MINIMUM OF 10'-0", OR AS REQUIRED BY CODE, AWAY FROM OPENINGS INTO BUILDING AND FRESH AIR INTAKES.

PLUMBING DRAWING INDEX

SHEET	DESCRIPTION
P-1.0	PLUMBING COVER SHEET
P-2.0	PLUMBING SITE PLAN
P-3.0	OVERALL PLUMBING SUPPLY PLAN
P-3.1	OVERALL PLUMBING SANITARY PLAN
P-3.2	OVERALL GAS PLAN
P-3.3	PLUMBING ROOF PLAN
P-4.0	ENLARGED PARTIAL SUPPLY PLANS
P-4.1	ENLARGED PARTIAL SANITARY PLANS
P-5.0	PLUMBING SCHEDULES
P-6.0	SUPPLY RISER
P-6.1	SANITARY RISER
P-6.2	GAS RISER
P-7.0	PLUMBING DETAILS
P-7.1	PLUMBING DETAILS
P-8.0	PLUMBING SPECIFICATIONS

SERVICE SIZE CALCULATIONS

FIXTURE	QUANTITY	TYPE	F.U.	TOTAL F.U.	D.F.U.	TOTAL D.F.U.
BATHROOM GROUP (TANK)	0	PRIVATE	3.60	0.00	5.00	0.00
BATHROOM GROUP (VALVE)	0	PRIVATE	8.00	0.00	5.00	0.00
BATHTUB	0	PRIVATE	1.40	0.00	2.00	0.00
BATHTUB	0	PUBLIC	4.00	0.00	2.00	0.00
BIDET	0	PRIVATE	2.00	0.00	1.00	0.00
DISHWASHER	1	PRIVATE	1.40	1.40	2.00	2.00
DRINKING FOUNTAIN	2		0.25	0.50	0.50	1.00
KITCHEN SINK	1	PRIVATE	1.40	1.40	2.00	2.00
KITCHEN SINK	0	COMMERCIAL	4.00	0.00	2.00	0.00
LAVATORY	1	PRIVATE	0.70	0.70	1.00	1.00
LAVATORY	6	PUBLIC	2.00	12.00	1.00	6.00
SERVICE SINK	2		3.00	6.00	2.00	4.00
SHOWER	1	PRIVATE	1.40	1.40	2.00	2.00
SHOWER	4	PUBLIC	4.00	16.00	2.00	8.00
URINAL ¾" VALVE	2	PUBLIC	5.00	10.00	2.00	4.00
URINAL 1" VALVE	0	PUBLIC	10.00	0.00	2.00	0.00
URINAL (TANK)	0	PUBLIC	3.00	0.00	2.00	0.00
LAUNDRY TRAY	0		1.40	0.00	2.00	0.00
WASHING MACHINE 8LB	0	PRIVATE	1.40	0.00	2.00	0.00
WASHING MACHINE 8LB	1	PUBLIC	3.00	3.00	3.00	3.00
WASHING MACHINE 15LB	0	PUBLIC	4.00	0.00	3.00	0.00
COMMERCIAL WASHER	0	PUBLIC	15.00	0.00	5.00	0.00
WATER CLOSET (VALVE)	1	PRIVATE	6.00	6.00	3.00	3.00
WATER CLOSET (TANK)	0	PRIVATE	2.20	0.00	4.00	0.00
WATER CLOSET (VALVE)	6	PUBLIC	10.00	60.00	4.00	24.00
WATER CLOSET (TANK)	0	PUBLIC	5.00	0.00	4.00	0.00
HOSE BIBB/WALL HYDRANT	5		5.00	25.00	0.00	0.00
POOL MAKEUP	0		20.00	0.00	0.00	0.00
FLOOR DRAINS	15		0.00	0.00	2.00	30.00
			TOTAL	143.4000	TOTAL	90.0000
WATER MAIN	2"		SEWER MAIN	4"		

CITY OF TAMPA
CONTRACT ADMINISTRATION DEPARTMENT
PLANNING AND DESIGN DIVISION
306 E. JACKSON STREET 4 NORTH
TAMPA, FLORIDA 33602
p: 813. 274. 8456 - f: 813. 274. 8080
url: www.tampagov.net

James E. Jackson, Jr. AIA, NOMA
City Architect
Edward D. Rice, AIA
Project Architect
Kevin L. Henika, AIA
Project Architect
Thomas A. Hester, Sr., AIA, NOMA
Project Architect
David R. Pagitt
Supervisor, Architectural Drafting
Kinsey C. Tillman
Drafting Technician
Jerry P. Sanders
Drafting Technician
Byron K. Thomas, LEED AP
Drafting Technician

MEP CONSULTANT
GRINER ENGINEERING, INC.
1628 1st. AVENUE NORTH
ST. PETERSBURG, FL 33713

STRUCTURAL CONSULTANT
BILLER REINHART STRUCTURAL GROUP, INC.
4014 GUNN HWY. SUITE 248
TAMPA, FL 33713

CIVIL CONSULTANT
5 M CIVIL LLC
12315 WYCLIFF PLACE
TAMPA, FL 33626

LANDSCAPE CONSULTANT
DAVID CONNER & ASSOCIATES
1809 W. SWANN AVENUE,SUITE 255
TAMPA, FL 33606

FIRE STATION 23
20770 TROUT CREEK DR.
TAMPA, FL 33647

DPW FILE NUMBER

DPW NUMBER
17-C-00037

ISSUE DATE
07-28-2017

DRAWN BY

REVISIONS
△
△
△

SEAL

Joseph H. Griner III, P.E. FL. 39491

SCALE: N.T.S.

PLUMBING COVER SHEET

SHEET NUMBER
P-1.0
X OF X

GRINER
GRINER ENGINEERING, INC.
1628 First Avenue North
St. Petersburg, Florida 33713
Phone: (727)-822-2335
Fax: (727)-821-3361
Certificate of Authorization #3173

Date	06-15-2017
Drawn	JL
Designed	JL
EOR	JHG
Job no.	17049

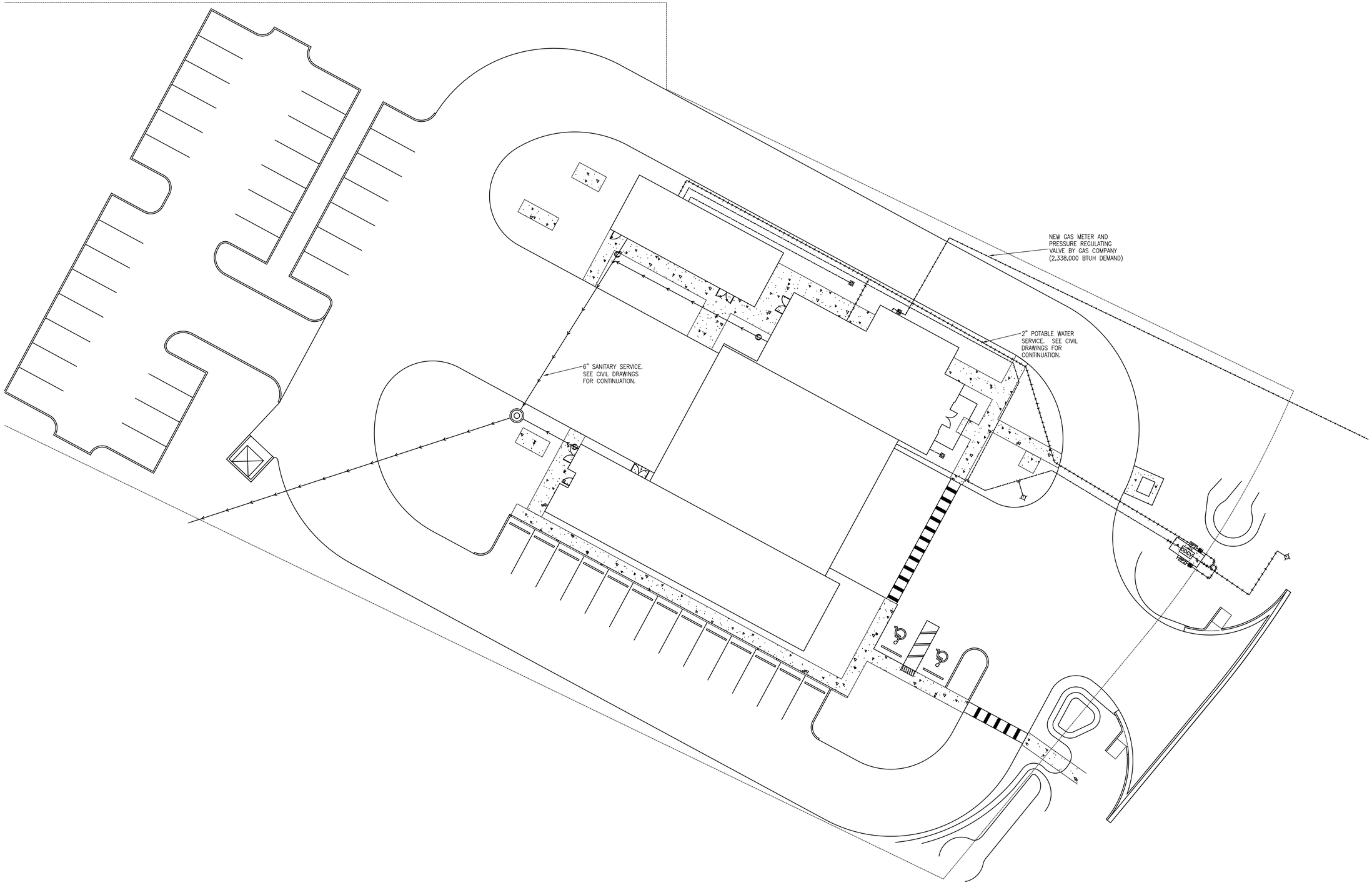

N

PLUMBING SITE PLAN
SCALE: 1/16" = 1'-0"

CITY OF TAMPA
CONTRACT ADMINISTRATION
DEPARTMENT
PLANNING AND DESIGN DIVISION

306 E. JACKSON STREET 4 NORTH
TAMPA, FLORIDA 33602
p: 813. 274. 8456 - f: 813. 274. 8080
url: www.tampagov.net

James E. Jackson, Jr. AIA, NOMA
City Architect
Edward D. Rice, AIA
Project Architect
Kevin L. Henika, AIA
Project Architect
Thomas A. Hester, Sr., AIA, NOMA
Project Architect
David R. Pagitt
Supervisor, Architectural Drafting
Kinsey C. Tillman
Drafting Technician
Jerry P. Sanders
Drafting Technician
Byron K. Thomas, LEED AP
Drafting Technician

MEP CONSULTANT
GRINER ENGINEERING, INC.
1628 1st. AVENUE NORTH
ST. PETERSBURG, FL 33713

STRUCTURAL CONSULTANT
BILLER REINHART
STRUCTURAL GROUP, INC.
4014 GUNN HWY. SUITE 248
TAMPA, FL 33713

CIVIL CONSULTANT
B M CIVIL LLC
12315 WYCLIFF PLACE
TAMPA, FL 33626

LANDSCAPE CONSULTANT
DAVID CONNER & ASSOCIATES
1509 W. SWANN AVENUE,SUITE 255
TAMPA, FL 33606

FIRE STATION 23
20770 TROUT CREEK DR.
TAMPA, FL 33647

DPW FILE NUMBER

DPW NUMBER
17-C-00037

ISSUE DATE
07-28-2017

DRAWN BY

REVISIONS

SEAL

Joseph H. Griner III, P.E. FL. 39491

SCALE: 1/16" = 1'-0"

PLUMBING SITE PLAN

SHEET NUMBER
P-2.0
X OF X

GRINER
GRINER ENGINEERING, INC.
1628 First Avenue North
St. Petersburg, Florida 33713
Phone: (727)-822-2335
Fax: (727)-821-3361
Certificate of Authorization #3173

Date	06-15-2017
Drawn	JL
Designed	JL
EOR	JHG
Job no.	17049

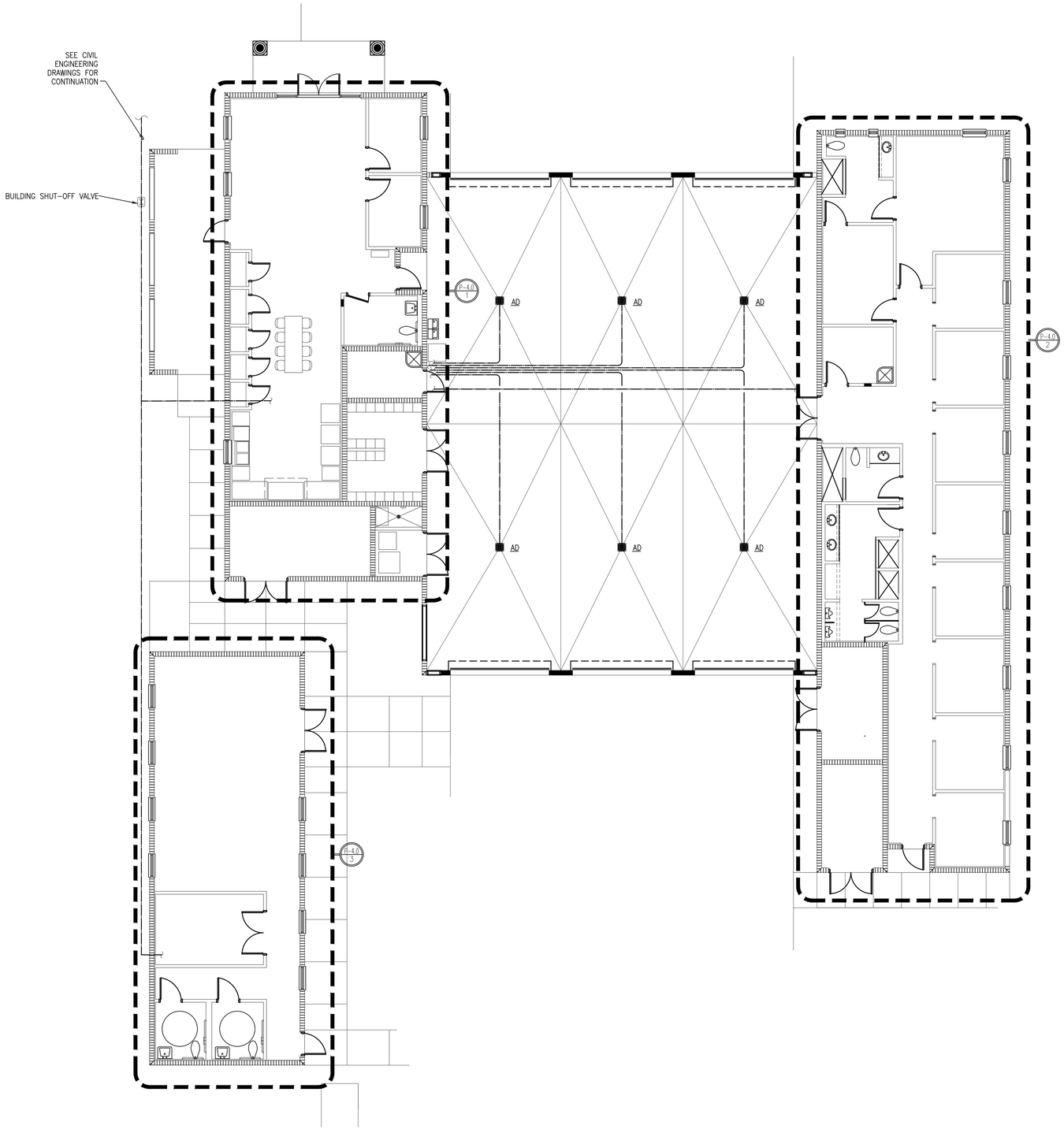

N

OVERALL SUPPLY PLAN
SCALE: 1/8" = 1'-0"

GRINER ENGINEERING, INC.
1628 First Avenue North
St. Petersburg, Florida 33713
Phone: (727)-822-2335
Fax: (727)-821-3361
Certificate of Authorization #3173

Date	06-15-2017
Drawn	JL
Designed	JL
EOR	JHG
Job no.	17049

CITY OF TAMPA
CONTRACT ADMINISTRATION DEPARTMENT
PLANNING AND DESIGN DIVISION
306 E. JACKSON STREET 4 NORTH
TAMPA, FLORIDA 33602
p: 813. 274. 8456 – f: 813. 274. 8080
url: www.tampagov.net

James E. Jackson, Jr. AIA, NOMA
City Architect
Edward D. Rice, AIA
Project Architect
Kevin L. Henika, AIA
Project Architect
Thomas A. Hester, Sr., AIA, NOMA
Project Architect
David R. Pagitt
Supervisor, Architectural Drafting
Kinsey C. Tillman
Drafting Technician
Jerry P. Sanders
Drafting Technician
Byron K. Thomas, LEED AP
Drafting Technician

MEP CONSULTANT
GRINER ENGINEERING, INC.
1628 1st. AVENUE NORTH
ST. PETERSBURG, FL 33713

STRUCTURAL CONSULTANT
BILLER REINHART STRUCTURAL GROUP, INC.
4014 GUNN HWY. SUITE 248
TAMPA, FL 33713

CIVIL CONSULTANT
B M CIVIL LLC
12315 WYCLIFF PLACE
TAMPA, FL 33626

LANDSCAPE CONSULTANT
DAVID CONNER & ASSOCIATES
1509 W. SWANN AVENUE,SUITE 255
TAMPA, FL 33606

FIRE STATION 23
20770 TROUT CREEK DR.
TAMPA, FL 33647

DPW FILE NUMBER

DPW NUMBER
17-C-00037

ISSUE DATE
07-28-2017

DRAWN BY

REVISIONS

SEAL

Joseph H. Griner III, P.E. FL. 39491

SCALE: 1/8" = 1'-0"

OVERALL PLUMBING SUPPLY PLAN

SHEET NUMBER
P-3.0
X OF X

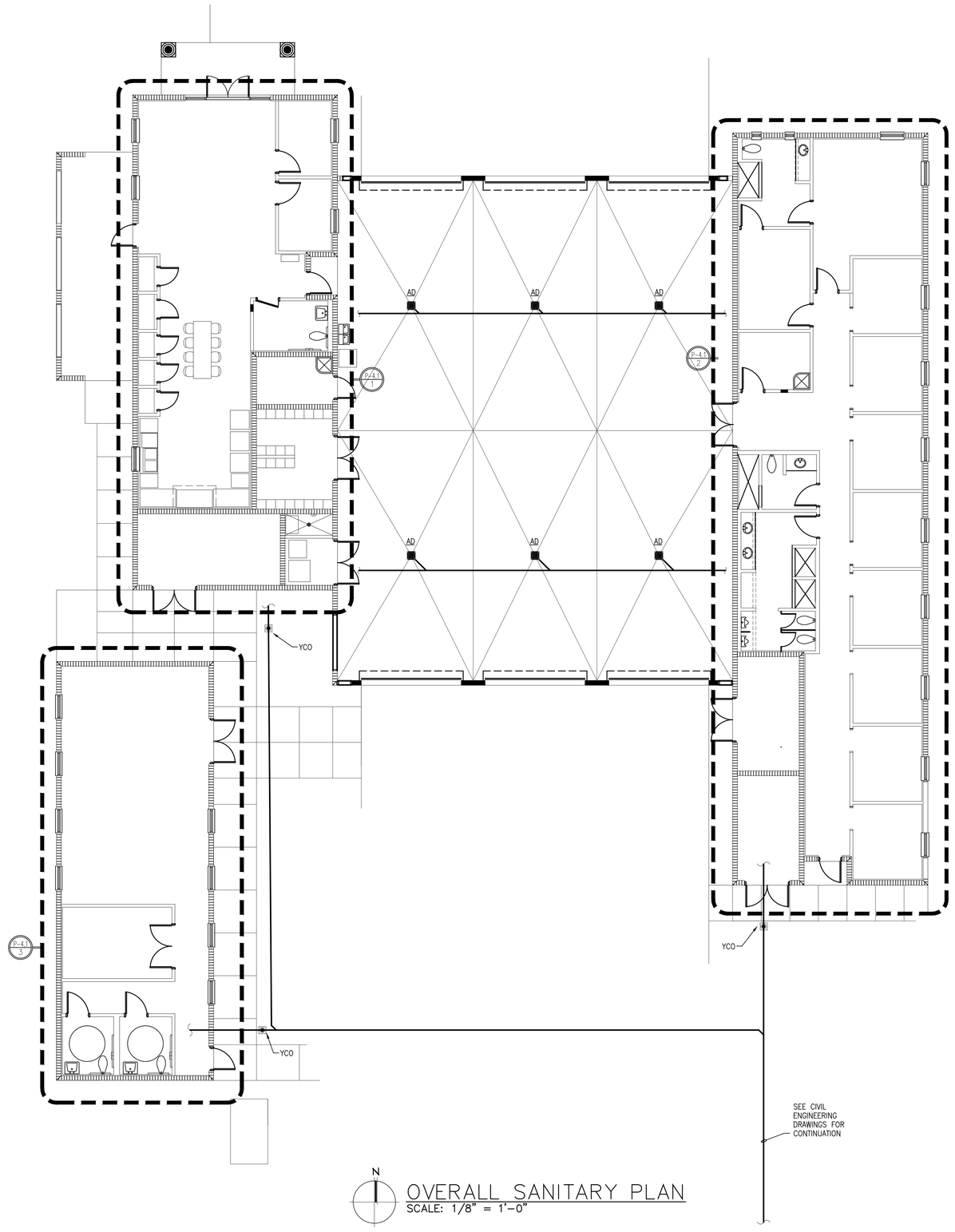

OVERALL SANITARY PLAN
SCALE: 1/8" = 1'-0"

GRINER ENGINEERING, INC.
1628 First Avenue North
St. Petersburg, Florida 33713
Phone: (727)-822-2335
Fax: (727)-821-3361
Certificate of Authorization #3173

Date	06-15-2017
Drawn	JL
Designed	JL
EOR	JHG
Job no.	17049

CITY OF TAMPA
CONTRACT ADMINISTRATION
DEPARTMENT
PLANNING AND DESIGN DIVISION
306 E. JACKSON STREET 4 NORTH
TAMPA, FLORIDA 33602
p: 813. 274. 8456 – f: 813. 274. 8080
url: www.tampagov.net

James E. Jackson, Jr. AIA, NOMA
City Architect
Edward D. Rice, AIA
Project Architect
Kevin L. Henika, AIA
Project Architect
Thomas A. Hester, Sr., AIA, NOMA
Project Architect
David R. Pagitt
Supervisor, Architectural Drafting
Kinsey C. Tillman
Drafting Technician
Jerry P. Sanders
Drafting Technician
Byron K. Thomas, LEED AP
Drafting Technician

MEP CONSULTANT
GRINER ENGINEERING, INC.
1628 1st. AVENUE NORTH
ST. PETERSBURG, FL 33713

STRUCTURAL CONSULTANT
BILLER REINHART
STRUCTURAL GROUP, INC.
4014 GUNN HWY. SUITE 248
TAMPA, FL 33713

CIVIL CONSULTANT
B M CIVIL LLC
12315 WYCLIFF PLACE
TAMPA, FL 33626

LANDSCAPE CONSULTANT
DAVID CONNER & ASSOCIATES
1509 W. SWANN AVENUE,SUITE 255
TAMPA, FL 33606

FIRE STATION 23
20770 TROUT CREEK DR.
TAMPA, FL 33647

DPW FILE NUMBER

DPW NUMBER
17-C-00037

ISSUE DATE
07-28-2017

DRAWN BY

REVISIONS

SEAL

Joseph H. Griner III, P.E. FL. 39491

SCALE: 1/8" = 1'-0"

OVERALL PLUMBING
SANITARY PLAN

SHEET NUMBER
P-3.1
X OF X

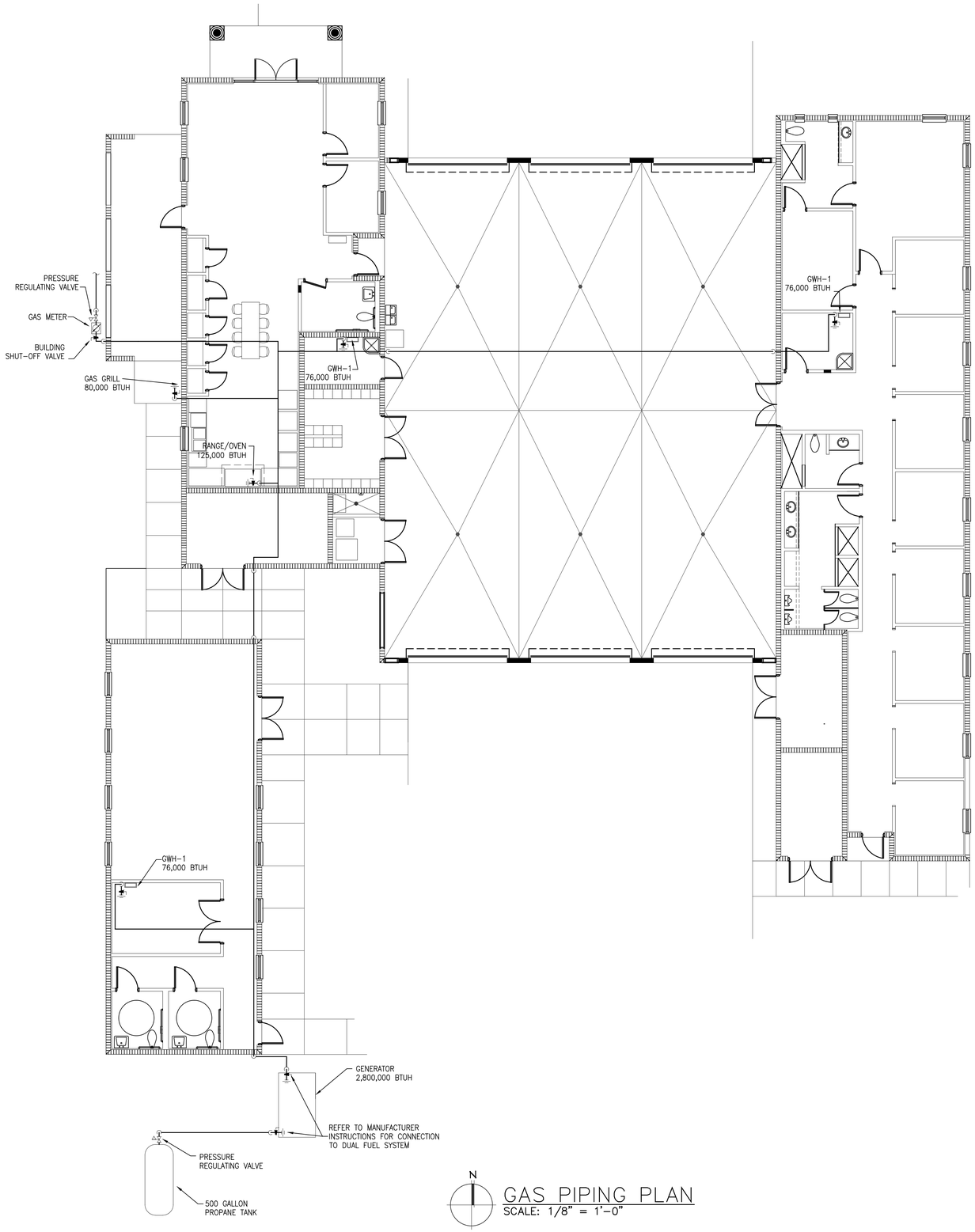

N

GAS PIPING PLAN

SCALE: 1/8" = 1'-0"

CITY OF TAMPA
CONTRACT ADMINISTRATION
DEPARTMENT
PLANNING AND DESIGN DIVISION

306 E. JACKSON STREET 4 NORTH
TAMPA, FLORIDA 33602
p: 813. 274. 8456 - f: 813. 274. 8080
url: www.tampagov.net

James E. Jackson, Jr. AIA, NOMA
City Architect
Edward D. Rice, AIA
Project Architect
Kevin L. Henika, AIA
Project Architect
Thomas A. Hester, Sr., AIA, NOMA
Project Architect
David R. Pagitt
Supervisor, Architectural Drafting
Kinsey C. Tillman
Drafting Technician
Jerry P. Sanders
Drafting Technician
Byron K. Thomas, LEED AP
Drafting Technician

MEP CONSULTANT
GRINER ENGINEERING, INC.
1628 1st. AVENUE NORTH
ST. PETERSBURG, FL 33713

STRUCTURAL CONSULTANT
BILLER REINHART
STRUCTURAL GROUP, INC.
4014 GUNN HWY. SUITE 248
TAMPA, FL 33713

CIVIL CONSULTANT
B M CIVIL LLC
12315 WYCLIFF PLACE
TAMPA, FL 33626

LANDSCAPE CONSULTANT
DAVID CONNER & ASSOCIATES
1509 W. SWANN AVENUE,SUITE 255
TAMPA, FL 33606

FIRE STATION 23
20770 TROUT CREEK DR.
TAMPA, FL 33647

DPW FILE NUMBER

DPW NUMBER
17-C-00037

ISSUE DATE
07-28-2017

DRAWN BY

REVISIONS

SEAL

Joseph H. Griner III, P.E. FL. 39491

SCALE: 1/8" = 1'-0"

OVERALL GAS PLAN

GRINER
GRINER ENGINEERING, INC.
1628 First Avenue North
St. Petersburg, Florida 33713
Phone: (727)-822-2335
Fax: (727)-821-3361
Certificate of Authorization #3173

Date	06-15-2017
Drawn	JL
Designed	JL
EOR	JHG
Job no.	17049

SHEET NUMBER

P-3.2

X OF X

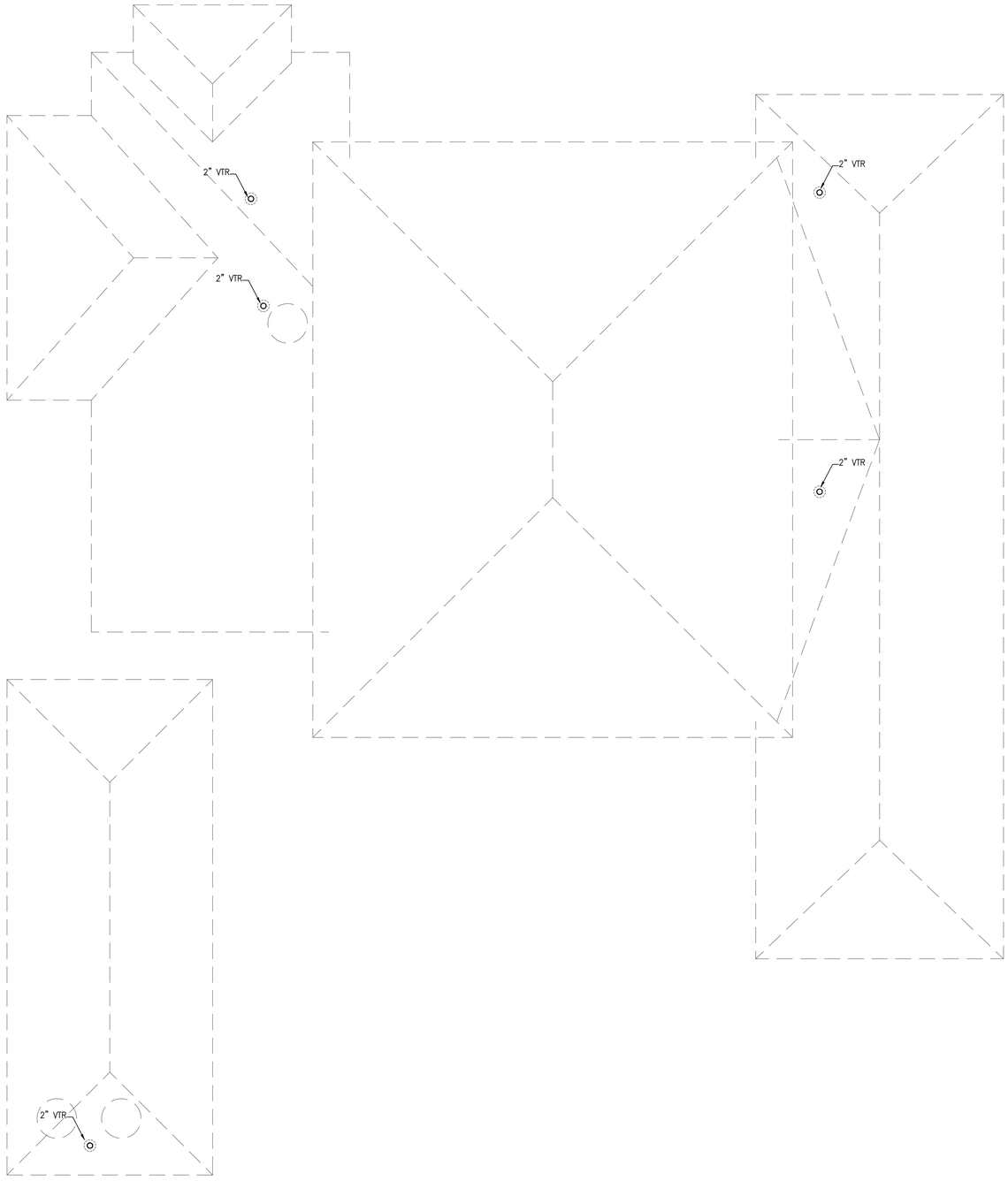

N

ROOF PLAN
SCALE: 1/8" = 1'-0"

CITY OF TAMPA
CONTRACT ADMINISTRATION
DEPARTMENT
PLANNING AND DESIGN DIVISION
306 E. JACKSON STREET 4 NORTH
TAMPA, FLORIDA 33602
p: 813. 274. 8456 – f: 813. 274. 8080
url: www.tampagov.net

James E. Jackson, Jr. AIA, NOMA
City Architect
Edward D. Rice, AIA
Project Architect
Kevin L. Henika, AIA
Project Architect
Thomas A. Hester, Sr., AIA, NOMA
Project Architect
David R. Pagitt
Supervisor, Architectural Drafting
Kinsey C. Tillman
Drafting Technician
Jerry P. Sanders
Drafting Technician
Byron K. Thomas, LEED AP
Drafting Technician

MEP CONSULTANT
GRINER ENGINEERING, INC.
1628 1st. AVENUE NORTH
ST. PETERSBURG, FL 33713

STRUCTURAL CONSULTANT
BILLER REINHART
STRUCTURAL GROUP, INC.
4014 GUNN HWY. SUITE 248
TAMPA, FL 33713

CIVIL CONSULTANT
B M CIVIL LLC
12315 WYCLIFF PLACE
TAMPA, FL 33626

LANDSCAPE CONSULTANT
DAVID CONNER & ASSOCIATES
1509 W. SWANN AVENUE,SUITE 255
TAMPA, FL 33606

FIRE STATION 23
20770 TROUT CREEK DR.
TAMPA, FL 33647

DPW FILE NUMBER

DPW NUMBER
17-C-00037

ISSUE DATE
07-28-2017

DRAWN BY

REVISIONS

SEAL

Joseph H. Griner III, P.E. FL. 39491

SCALE: 1/8" = 1'-0"

PLUMBING ROOF PLAN

SHEET NUMBER
P-3.3
X OF X

GRINER
GRINER ENGINEERING, INC.
1628 First Avenue North
St. Petersburg, Florida 33713
Phone: (727)-822-2335
Fax: (727)-821-3361
Certificate of Authorization #3173

Date	06-15-2017
Drawn	JL
Designed	JL
EOR	JHG
Job no.	17049

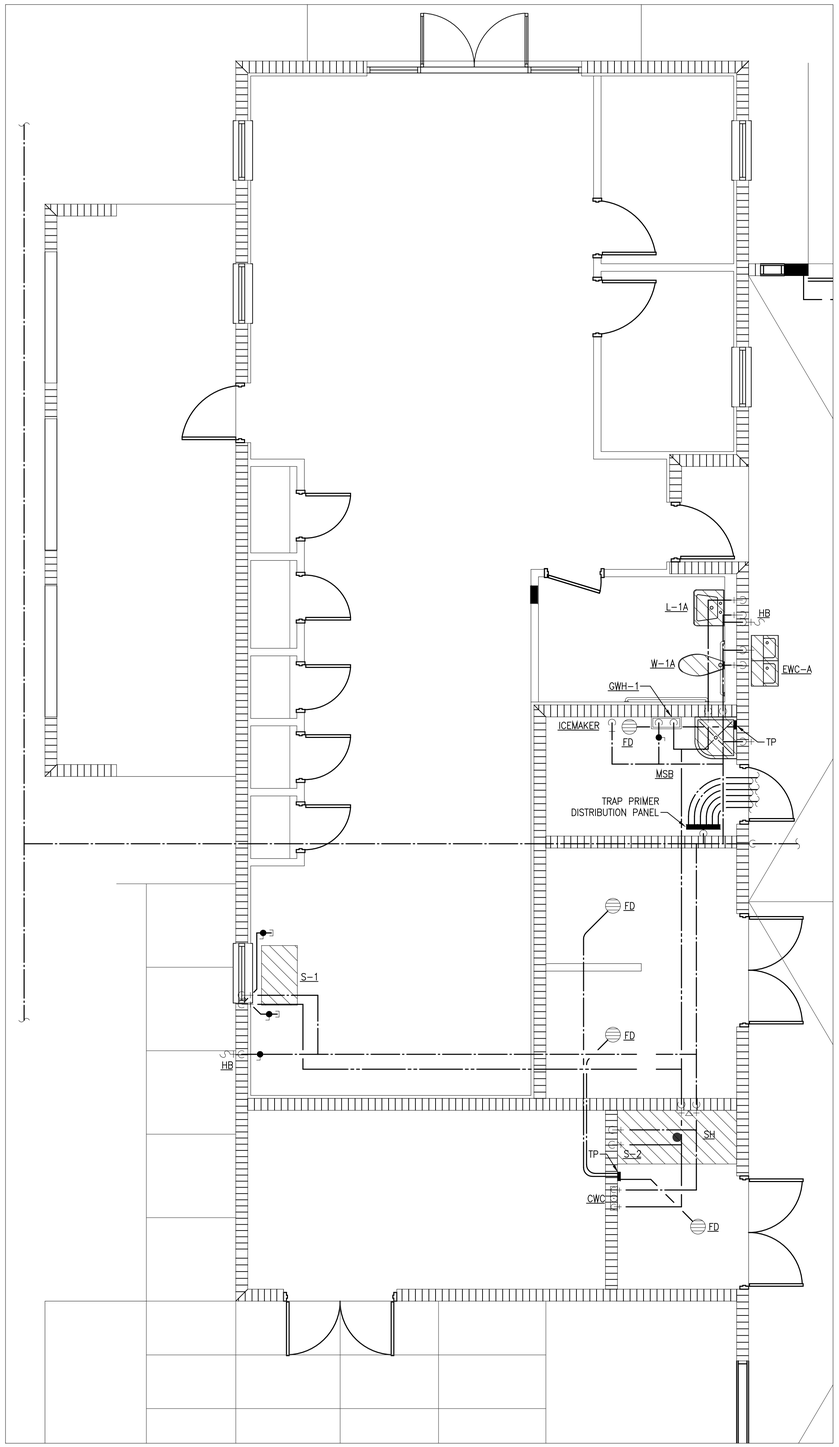

N

PARTIAL SUPPLY PLAN 1
SCALE: 1/4" = 1'-0"

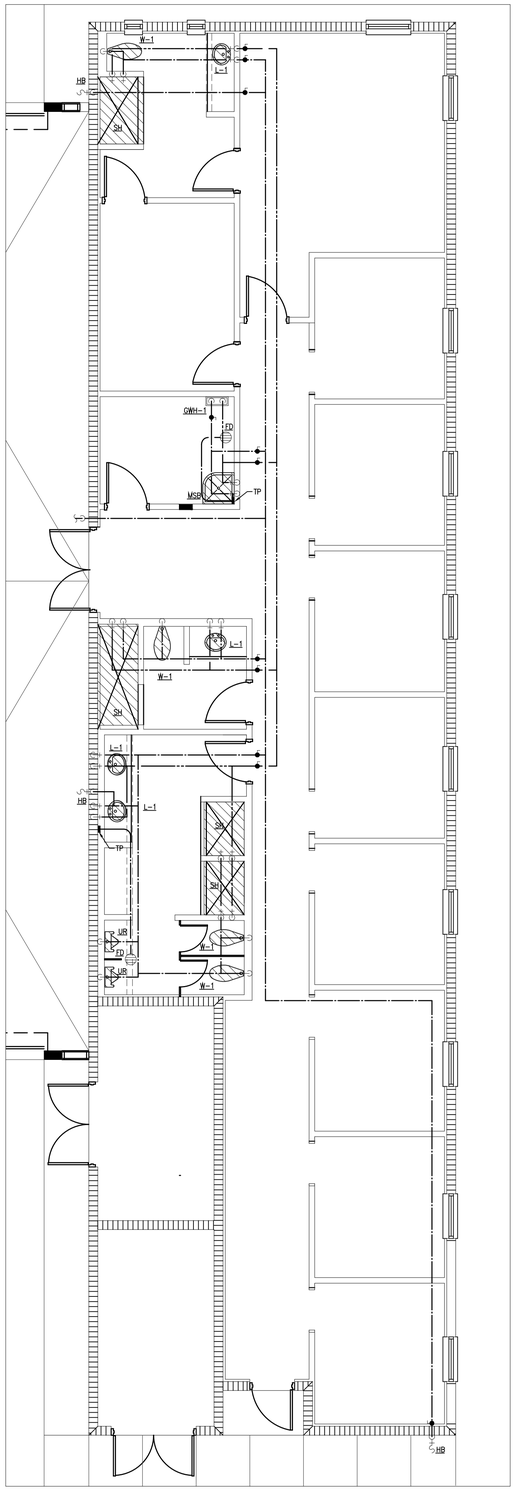

N

PARTIAL SUPPLY PLAN 2
SCALE: 1/4" = 1'-0"

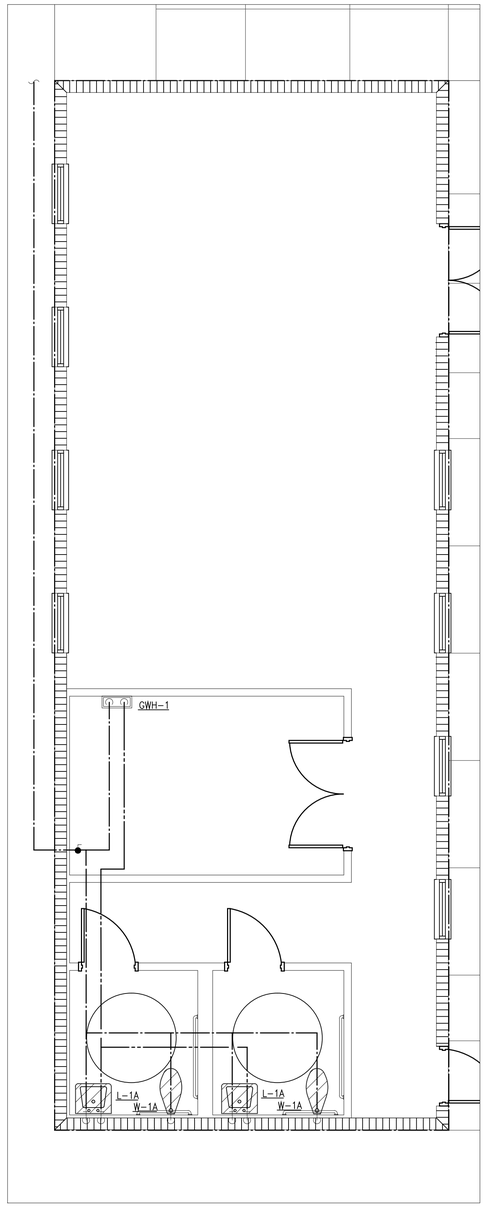

P-4.0
PARTIAL SUPPLY PLAN 3

CITY OF TAMPA
CONTRACT ADMINISTRATION
DEPARTMENT
PLANNING AND DESIGN DIVISION

306 E. JACKSON STREET 4 NORTH
TAMPA, FLORIDA 33602
p: 813. 274. 8466 - f: 813. 274. 8080
url: www.tampagov.net

James E. Jackson, Jr. AIA, NOMA
City Architect
Edward D. Rice, AIA
Project Architect
Kevin L. Henika, AIA
Project Architect
Thomas A. Hester, Sr., AIA, NOMA
Project Architect
David R. Pagitt
Supervisor, Architectural Drafting
Kinsey C. Tillman
Drafting Technician
Jerry P. Sanders
Drafting Technician
Byron K. Thomas, LEED AP
Drafting Technician

MEP CONSULTANT
GRINER ENGINEERING, INC.
1628 1st. AVENUE NORTH
ST. PETERSBURG, FL 33713

STRUCTURAL CONSULTANT
BILLER REINHART
STRUCTURAL GROUP, INC.
4014 GUNN HWY. SUITE 248
TAMPA, FL 33713

CIVIL CONSULTANT
B M CIVIL LLC
12315 WYCLIFF PLACE
TAMPA, FL 33626

LANDSCAPE CONSULTANT
DAVID CONNER & ASSOCIATES
1509 W. SWANN AVENUE,SUITE 255
TAMPA, FL 33606

FIRE STATION 23
20770 TROUT CREEK DR.
TAMPA, FL 33647

DPW FILE NUMBER

DPW NUMBER
17-C-00037

ISSUE DATE
07-28-2017

DRAWN BY

REVISIONS

SEAL

Joseph H. Griner III, P.E. FL. 39491

SCALE: 1/4" = 1'-0"

ENLARGED PARTIAL
PLUMBING SUPPLY PLANS

SHEET NUMBER
P-4.1
X OF X

GRINER
GRINER ENGINEERING, INC.
1628 First Avenue North
St. Petersburg, Florida 33713
Phone: (727)-822-2335
Fax: (727)-821-3361
Certificate of Authorization #3173

Date	06-15-2017
Drawn	JL
Designed	JL
EOR	JHG
Job no.	17049

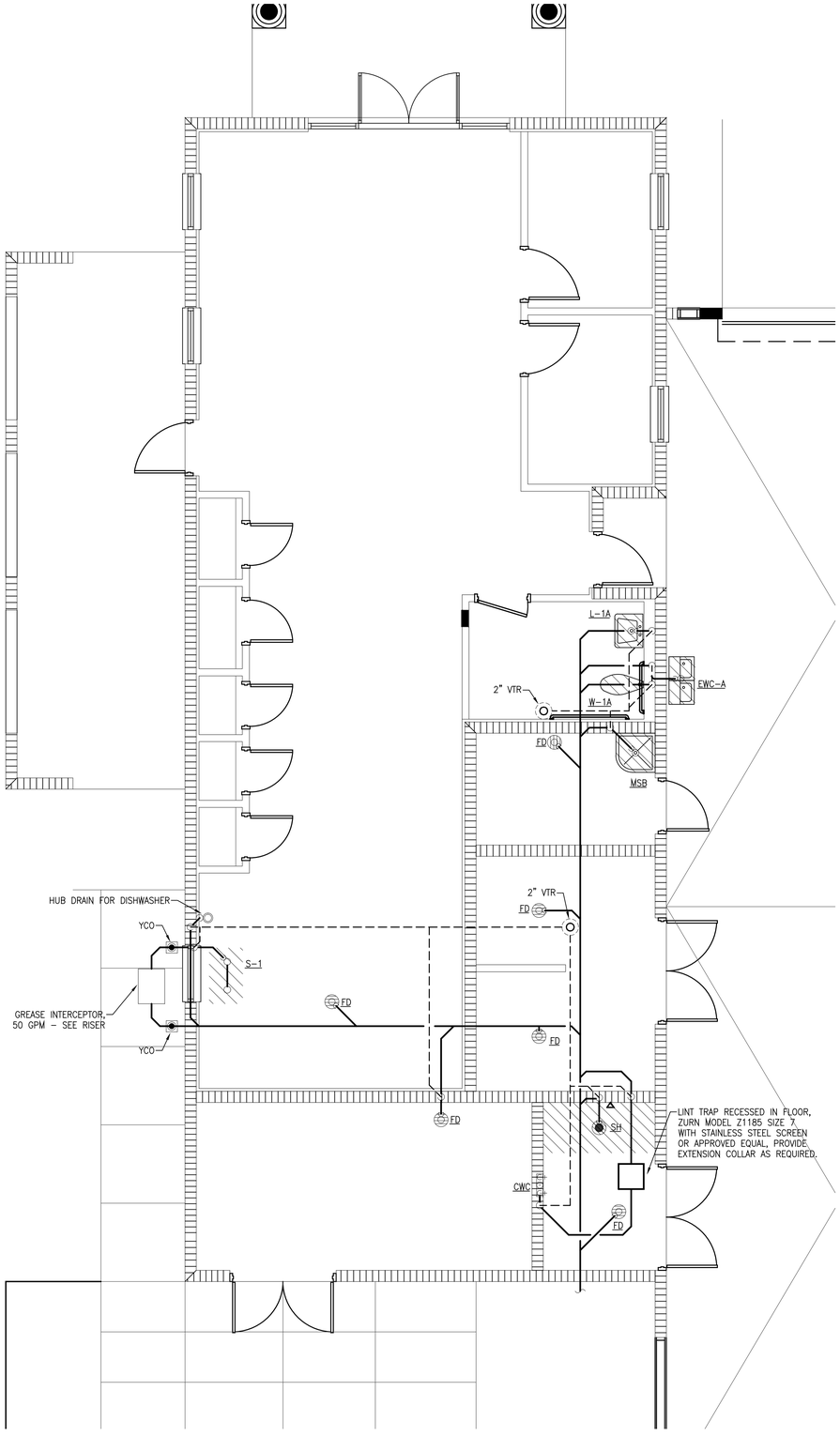

N

PARTIAL SANITARY PLAN 1

SCALE: 1/4" = 1'-0"

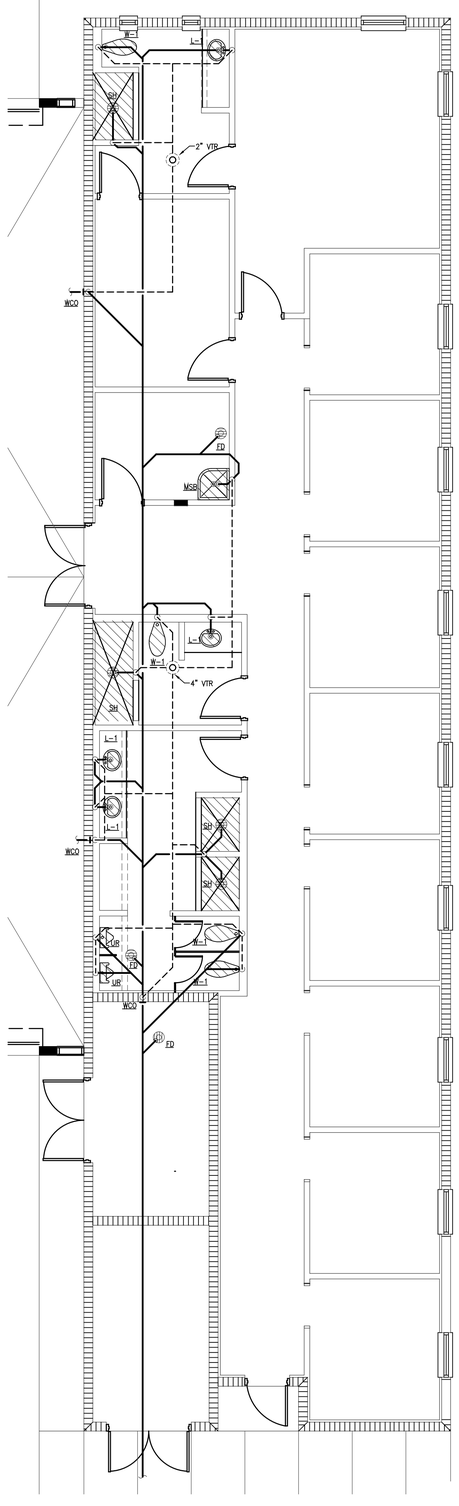

N

PARTIAL SANITARY PLAN 2

SCALE: 1/4" = 1'-0"

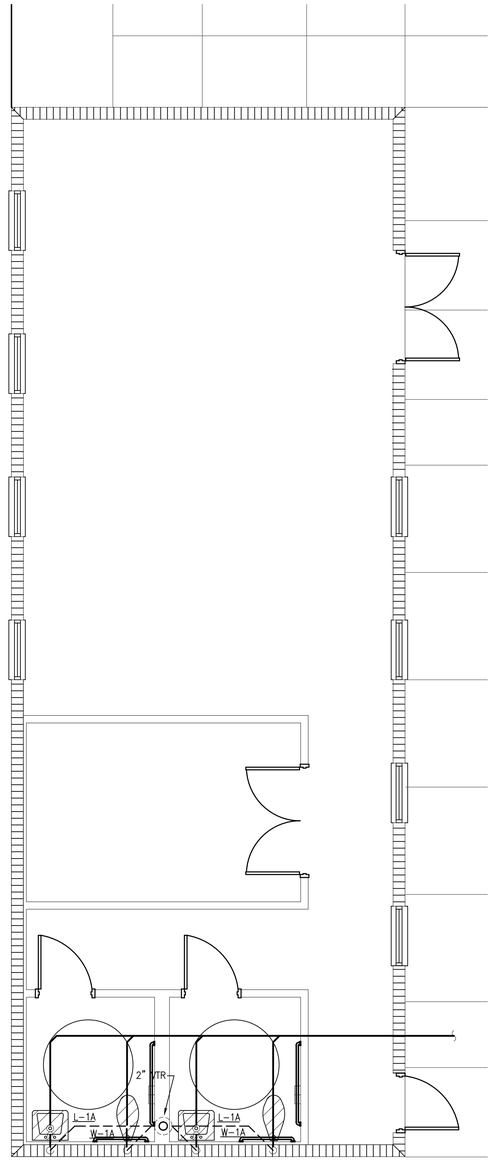

N

PARTIAL SANITARY PLAN 3

SCALE: 1/4" = 1'-0"

CITY OF TAMPA
CONTRACT ADMINISTRATION
DEPARTMENT
PLANNING AND DESIGN DIVISION

306 E. JACKSON STREET 4 NORTH
TAMPA, FLORIDA 33602
p: 813. 274. 8456 - f: 813. 274. 8080
url: www.tampagov.net

James E. Jackson, Jr. AIA, NOMA
City Architect
Edward D. Rice, AIA
Project Architect
Kevin L. Henika, AIA
Project Architect
Thomas A. Hester, Sr., AIA, NOMA
Project Architect
David R. Pagitt
Supervisor, Architectural Drafting
Kinsey C. Tillman
Drafting Technician
Jerry P. Sanders
Drafting Technician
Byron K. Thomas, LEED AP
Drafting Technician

MEP CONSULTANT
GRINER ENGINEERING, INC.
1628 1st. AVENUE NORTH
ST. PETERSBURG, FL 33713

STRUCTURAL CONSULTANT
BILLER REINHART
STRUCTURAL GROUP, INC.
4014 GUNN HWY. SUITE 248
TAMPA, FL 33713

CIVIL CONSULTANT
B M CIVIL LLC
12315 WYCLIFF PLACE
TAMPA, FL 33626

LANDSCAPE CONSULTANT
DAVID CONNER & ASSOCIATES
1509 W. SWANN AVENUE,SUITE 255
TAMPA, FL 33606

FIRE STATION 23
20770 TROUT CREEK DR.
TAMPA, FL 33647

DPW FILE NUMBER

DPW NUMBER
17-C-00037

ISSUE DATE
07-28-2017

DRAWN BY

REVISIONS

SEAL

Joseph H. Griner III, P.E. FL. 39491

SCALE: 1/4" = 1'-0"

ENLARGED PARTIAL
PLUMBING SANITARY PLANS

GRINER
GRINER ENGINEERING, INC.
1628 First Avenue North
St. Petersburg, Florida 33713
Phone: (727)-822-2335
Fax: (727)-821-3361
Certificate of Authorization #3173

Date	06-15-2017
Drawn	JL
Designed	JL
EOR	JHG
Job no.	17049

SHEET NUMBER

P-4.2

X OF X

PLUMBING FIXTURE SCHEDULE

MARK	FIXTURE, MODEL NUMBER AND DESCRIPTION	ROUGH-IN			
		WASTE	VENT	CW	HW
CWC	OATEY 38957 OFFSET DRAIN WASHING MACHINE OUTLET BOXES 2" DRAIN OPENING FITS PVC OR ABS SCHEDULE 40 DWV PIPE, BOX MADE OF HIGH IMPACT POLYSTYRENE, ¼ TURN BRASS BALL VALVES – COPPER SWEAT – STANDARD PACK	3"	2"	½"	½"
L-1	LAVATORY, COUNTERTOP MOUNTED, AMERICAN STANDARD 0475.047 WHITE, 20⅜x17⅜ "AQUALYN", VITREOUS CHINA, FRONT OVERFLOW. T&S EC-3102 "CHECKPOINT" ELECTRONIC FAUCET, CHROME PLATED. PROFLO M155A 1¼" CHROME PLATED DRAIN. PROVIDE TRAP, SUPPLIES, STOPS, ETC FOR COMPLETE INSTALLATION.	2"	2"	½"	½"
L-1A	ADA COMPLIANT LAVATORY, WALL HUNG, AMERICAN STANDARD 0356.421 WHITE, 20⅜x18⅛ "LUCERNE", VITREOUS CHINA, FRONT OVERFLOW. T&S EC-3102 "CHECKPOINT" ELECTRONIC FAUCET, CHROME PLATED. PROFLO M156A 1¼" CHROME PLATED DRAIN. PROVIDE TRAP, SUPPLIES, STOPS, ETC FOR COMPLETE INSTALLATION.	2"	2"	½"	½"
MSB	MOP SINK, FIAT MSB2424, MOLDED STONE, 24x24x12, SERVICE FAUCET PLATE #830-AA, HOSE AND HOSE BRACKET PLATE #832-AA, BUMPER GUARD PLATE #E-77-AA, WITH INTEGRAL DRAIN. PROVIDE TRAP, SUPPLIES, STOPS, ETC FOR COMPLETE INSTALLATION.	2"	2"	½"	½"
S-1	TWO COMPARTMENT SINK, ELKAY LUSTERTONE LR-3321, 33x21¼ STAINLESS STEEL 18 GAUGE, SELF RIM, 3 FAUCET HOLE. ELKAY FAUCET LK-4100 SINGLE LEVER, LK335 DUO STRAINER, STAINLESS STEEL BODY WITH CUP STRAINER. PROVIDE TRAP, SUPPLIES, STOPS, ETC FOR COMPLETE INSTALLATION.	2"	2"	½"	½"
S-2	SCRUB SINK, ELKAY #EWS-2520-F-C 22x16 COMPARTMENT, LK-398-C DOUBLE FOOT PEDAL VALVE WITH ½" INLETS, LK-395CP 9" GOOSENECK SPOUT, AND LK-18-B STAINLESS STEEL GRID DRAIN. PROVIDE TRAP, SUPPLIES, STOPS, ETC FOR COMPLETE INSTALLATION.	2"	2"	½"	½"
SH	SHOWER, DELTA #R1000-IP PRESSURE BALANCING SHOWER MIXING VALVE WITH #T13291 MONITOR SERIES WALL MOUNTED SHOWER TRIM. JAY R. SMITH #2010-A SHOWER DRAIN WITH 5" DIAMETER ROUND NICKEL BRONZE TOP. PROVIDE TRAP, SUPPLIES, STOPS, ETC FOR COMPLETE INSTALLATION.	2"	2"	½"	½"
UR	URINAL, WALL HUNG, AMERICAN STANDARD 6590.505 WHITE "WASHBROOK" VITREOUS CHINA URINAL. ¾" TOP SPUD, SLOAN 8186-0.5 "OPTIMA G2 PLUS" AUTOMATIC FLUSH VALVE (0.5 GPF), ZURN Z1221 CARRIER. MOUNT AT STANDARD HEIGHT A.F.F. PROVIDE TRAP, SUPPLIES, STOPS, ETC FOR COMPLETE INSTALLATION.	2"	2"	¾"	--
W-1	WATER CLOSET, WALL HUNG, AMERICAN STANDARD 3351.712 WHITE "AFWALL" ELONGATED BOWL, 1½" TOP SPUD, VITREOUS CHINA, CENTOCO 1500CCSSWH OPEN FRONT SEAT LESS COVER, SLOAN 8111-1.28 "OPTIMA G2 PLUS" AUTOMATIC FLUSH VALVE (1.28 GPF), ZURN Z1208 CARRIER. PROVIDE ALL ITEMS NEEDED FOR COMPLETE INSTALLATION.	3"	2"	1"	--
W-1A	ADA COMPLIANT WATER CLOSET, WALL HUNG, AMERICAN STANDARD 3351.712 WHITE "AFWALL" ELONGATED BOWL, 1½" TOP SPUD, VITREOUS CHINA, CENTOCO 1500CCSSWH OPEN FRONT SEAT LESS COVER, SLOAN 8111-1.28 "OPTIMA G2 PLUS" AUTOMATIC FLUSH VALVE (1.28 GPF), ZURN Z1208 CARRIER. MOUNT 17" TO RIM. PROVIDE ALL ITEMS NEEDED FOR COMPLETE INSTALLATION.	3"	2"	1"	--
EWC-A	ADA COMPLIANT ELECTRIC WATER COOLER, ELKAY EZSTL8C, BARRIER FREE WALL MOUNTED BI-LEVEL WATER COOLER; WATTS 5-YR IN-LINE WATER FILTER; ZURN Z-1225-BL WATER COOLER SUPPORT SYSTEM WITH TOP AND BOTTOM PLATES. PROVIDE CARRIER, TRAP, SUPPLIES, STOPS, ETC FOR COMPLETE INSTALLATION.	2"	2"	½"	--

NOTES:

1. LAVATORY & WATER COOLERS SUPPLY SHALL BE BRASS W/ BRASS ANGLE STOPS FOR ½" WATER SUPPLY LINES, W/ LOOSE KEY (W/CAP), AND WALL FLANGE. ALL COMPONENTS SHALL BE POLISHED CHROME FINISH. MANUFACTURER: BRASS CRAFT OR APPROVED EQUAL.

2. CAST BODY "P" TRAP 1¼" x 1¼" WITH HEAVY CAST J-BEND & FLAT CLEANOUT PLUG, SLIP NUTS AND WALL FLANGE. ALL COMPONENTS SHALL BE POLISHED CHROME FINISH. MANUFACTURER: BRASS CRAFT OR APPROVED EQUAL.

3. STRAINERS SHALL BE FURNISHED WITH FIXTURES AS REQUIRED. FOR H/C LAVATORY OR SINKS PROVIDE OFFSET TAILPIECE.

4. PROVIDE TRUEBRO MODEL 103 (WHITE), ANTIMICROBAL HANDI LAV-GUARDS INSTALLATION KIT FOR ALL WHEELCHAIR LAVATORY & SINKS FOR WATER SUPPLIES & WASTE LINE.

5. PROVIDE WATER SUPPLY & "P" TRAP & OPTIONAL WATER FILTERS FOR ELECTRIC WATER COOLERS AS PER MANUFACTURERS RECOMMENDATIONS.

6. SHOWER FLOOR & WALL ENCLOSURE WITH GLAZING BY G.C.

7. THE PLUMBING FIXTURES VENDOR SHALL COORDINATE WITH THE PLUMBING AND GENERAL CONTRACTOR ALL PLUMBING FIXTURES ROUGH IN DIMENSIONS BEFORE CONSTRUCTION BEGIN.

8. UNLESS SHOWN ABOVE, PLUMBING FIXTURES MANUFACTURER, TRIM COLOR AND FINISH SHALL BE FURNISHED AS DIRECTED BY OWNER/ARCHITECT.

WATER HEATER SCHEDULE

MARK	MAKE & MODEL	TYPE	DIMENSIONS	STORAGE (GALLONS)	EFFICIENCY	CAPACITY (GPM)	INPUT (BTUH)	FLUE (INCHES)	ELECTRICAL					NOTES
									NUM OF ELEMENTS	KW EA	KW TOTAL	VOLTAGE	PHASE	
GWH-1	BOSCH GREENTHERM C 1050ES	GAS TANKLESS	17⅞" X 30½" X 11¼"	--	94%	6.7@55°F	199,000 MAX	4" PVC	--	--	--	--	--	1,2,3,4,5

NOTES:

1. PROVIDE FACTORY INSTALLED HEAVY DUTY ELECTRICAL JUNCTION BOX, CONTROLS, WITH T-STATS SET ON 120°F.
2. INSTALL WATER HEATER IN ACCORDANCE TO SPC, SMC CODES, NEC, AND APPLICABLE STANDARDS AND MANUFACTURERS RECOMMENDATIONS.
3. CONTACT MANUFACTURERS REPRESENTATIVE FOR HEATERS ELECTRICAL DATA BEFORE FINAL ORDER IS MADE.
4. INSTALL WATER HEATER IN ACCORDANCE WITH BUILDING CODE – PLUMBING & MECHANICAL (WITH LATEST AMENDMENTS) CODES, ENERGY CODE, AND APPLICABLE STANDARDS AND MANUFACTURERS RECOMMENDATIONS.
5. PROVIDE BRASS DRAIN VALVE, & ALL REQUIRED OPTIONS TO COMPLETE THE INSTALLATION.
6. PROVIDE FACTORY INSTALLED HEAVY DUTY ELECTRICAL JUNCTION BOX, CONTROLS, WITH T-STATS SET ON 180°F.

PLUMBING SPECIALTIES SCHEDULE

MARK	DESCRIPTION	MANUFACTURER	MODEL/PART NUMBER	DETAILED DESCRIPTION
AAV	AIR ADMITTING VALVE	STUDOR	MINI-VENT	INSTALL VALVE IN SINK CABINET
AD	AREA DRAIN	ZURN	ZN415-5S-P	DURA-COATED CAST IRON BODY DRAIN W/TRAP PRIMER CONNECTION & 5" SQUARE TYPE "S" STRAINER
BWV	BACKWATER VALVE	ZURN	Z1088	GATE TYPE BACKWATER VALVE
BWV	BACKWATER VALVE	ZURN	Z1099	BALL FLOAT TYPE BACKWATER VALVE
CPRV	CALIBRATED PRESSURE RELIEF VALVE	WATTS	MODEL 540C	INSTALL A MINIMUM OF 12" ABOVE WATER HEATER AND PIPE DISCHARGE TO ADEQUATE LOCATION
DB	DOWNSPOUT BOOT	ZURN	Z191	DOWNSPOUT BOOT, 5"x4" INLET AND 4"ø OUTLET
DB	DOWNSPOUT BOOT	ZURN	Z191-RD	DOWNSPOUT BOOT, 4"ø INLET AND 4"ø OUTLET
DB	DOWNSPOUT BOOT	ZURN	Z192	DOWNSPOUT BOOT, 4"x3" INLET AND 4"ø OUTLET
DCBFP	DOUBLE CHECK BFP	WATTS	SERIES 7	ALL BRASS BODY, FOR POINT OF USE CONNECTION
FCO	FLOOR CLEANOUT	ZURN	ZN1400	DURA-COATED CAST IRON BODY WITH THREADED PLUG AND POLISHED NICKEL BRONZE TOP
FD	FLOOR DRAIN	ZURN	ZN415-P-7B	DURA-COATED CAST IRON BODY WITH 3" BOTTOM OUTLET, TRAP PRIMER CONNECTION AND TYPE "B" STRAINER
FDF	FLOOR DRAIN WITH FUNNEL	ZURN	ZN415-P-7E	DURA-COATED CAST IRON BODY WITH 3" BOTTOM OUTLET, TRAP PRIMER CONNECTION AND STRAINER WITH 4"ø FUNNEL
FS	FLOOR SINK	ZURN	Z1910-23	8"x8"x6" CAST IRON FLOOR RECEPTOR WITH ALUMINUM BUCKET AND SQUARE SLOTTED GRATE
FSH	FLOOR SINK – HALF GRATE	ZURN	Z1910-2-23	8"x8"x6" CAST IRON FLOOR RECEPTOR WITH ALUMINUM BUCKET AND SQUARE SLOTTED ½ GRATE
FSQ	FLOOR SINK – THREE QUARTER GRATE	ZURN	Z1910-3-23	8"x8"x6" CAST IRON FLOOR RECEPTOR WITH ALUMINUM BUCKET AND SQUARE SLOTTED ¾ GRATE
HB	HOSE BIBB	WOODFORD	24P¾PC	POLISHED CHROME FINISH WITH INTEGRAL VACUUM BREAKER
HD	HUB DRAIN	ZURN	Z326-DB	INDIRECT WASTE FUNNEL WITH DURA-COATED CAST IRON BODY AND BOTTOM DOME STRAINER
NWH	NARROW WALL HYDRANT	ZURN	Z1350	BRONZE BODY, KEY OPERATED VALVE, STAINLESS STEEL BOX WITH LOCK, MODERATE CLIMATE
RD	ROOF DRAIN	ZURN	ZC100-AC-GD	15"ø ROOF DRAIN, DURA-COATED CAST IRON, ANGULAR UNDERDECK MEMBRANE CLAMP AND GALVANIZED DOME
RO	ROOF OVERFLOW DRAIN	ZURN	ZC100-AC-GD-89	15"ø ROOF DRAIN, DURA-COATED CAST IRON, ANGULAR UNDERDECK MEMBRANE CLAMP, GALVANIZED DOME AND 2" DAM
RON	ROOF OVERFLOW NOZZLE	ZURN	Z199	DOWNSPOUT NOZZLE, NICKEL BRONZE BODY, THREADED INLET AND DECORATIVE WALL FLANGE AND OUTLET NOZZLE
RPBFP	REDUCED PRESSURE BACKFLOW PREVENTOR	WATTS	909-QT-S	ALL BRASS BODY, ASSEMBLY SHALL INCLUDE STRAINER AND BALL SHUT OFF VALVES
SA	WATER HAMMER ARRESTOR	ZURN	Z1700	ALL STAINLESS STEEL CONSTRUCTION, ¾" & 1", SIZE PER MANUFACTURER'S RECOMMENDATIONS
TP	TRAP PRIMER	ZURN	Z1022	ALL BRONZE BODY WITH INTEGRAL VACUUM BREAKER (ADDITIONAL OUTLET DISTRIBUTION UNIT AS REQUIRED)
VB	VACUUM BREAKER	WATTS	SERIES 8	BRASS BODY, CHROME FINISH
WCO	WALL CLEANOUT	ZURN	Z1446	DURA-COATED CAST IRON CLEANOUT TEE WITH THREADED PLUG AND ROUND STAINLESS STEEL ACCESS COVER
WH	WALL HYDRANT	ZURN	Z1335	BRONZE BODY, KEY OPERATED VALVE, NICKEL BRONZE BOX WITH LOCK, MODERATE CLIMATE
WH	WALL HYDRANT	ZURN	Z1305	BRONZE BODY, KEY OPERATED VALVE, NICKEL BRONZE BOX WITH LOCK, FREEZING CLIMATE
YCO	YARD CLEANOUT	ZURN	Z1474	HEAVY DUTY DURA-COATED CAST IRON CLEANOUT HOUSING WITH SECURE SCORIATED COVER

GRINER ENGINEERING, INC.
1628 First Avenue North
St. Petersburg, Florida 33713
Phone: (727)-822-2335
Fax: (727)-821-3361
Certificate of Authorization #3173

Date	06-15-2017
Drawn	JL
Designed	JL
EOR	JHG
Job no.	17049

CITY OF TAMPA
CONTRACT ADMINISTRATION DEPARTMENT
PLANNING AND DESIGN DIVISION
306 E. JACKSON STREET 4 NORTH
TAMPA, FLORIDA 33602
p: 813. 274. 8456 – f: 813. 274. 8080
url: www.tampagov.net

James E. Jackson, Jr. AIA, NOMA
City Architect
Edward D. Rice, AIA
Project Architect
Kevin L. Henika, AIA
Project Architect
Thomas A. Hester, Sr., AIA, NOMA
Project Architect
David R. Pagitt
Supervisor, Architectural Drafting
Kinsey C. Tillman
Drafting Technician
Jerry P. Sanders
Drafting Technician
Byron K. Thomas, LEED AP
Drafting Technician

MEP CONSULTANT
GRINER ENGINEERING, INC.
1628 1st. AVENUE NORTH
ST. PETERSBURG, FL 33713

STRUCTURAL CONSULTANT
BILLER REINHART STRUCTURAL GROUP, INC.
4014 GUNN HWY. SUITE 248
TAMPA, FL 33713

CIVIL CONSULTANT
5 M CIVIL LLC
12315 WYCLIFF PLACE
TAMPA, FL 33626

LANDSCAPE CONSULTANT
DAVID CONNER & ASSOCIATES
1509 W. SWANN AVENUE,SUITE 255
TAMPA, FL 33606

FIRE STATION 23
20770 TROUT CREEK DR.
TAMPA, FL 33647

DPW FILE NUMBER

DPW NUMBER
17-C-00037

ISSUE DATE
07-28-2017

DRAWN BY

REVISIONS

SEAL

Joseph H. Griner III, P.E. FL. 39491

SCALE: N.T.S.

PLUMBING SCHEDULES

SHEET NUMBER
P-5.0
X OF X

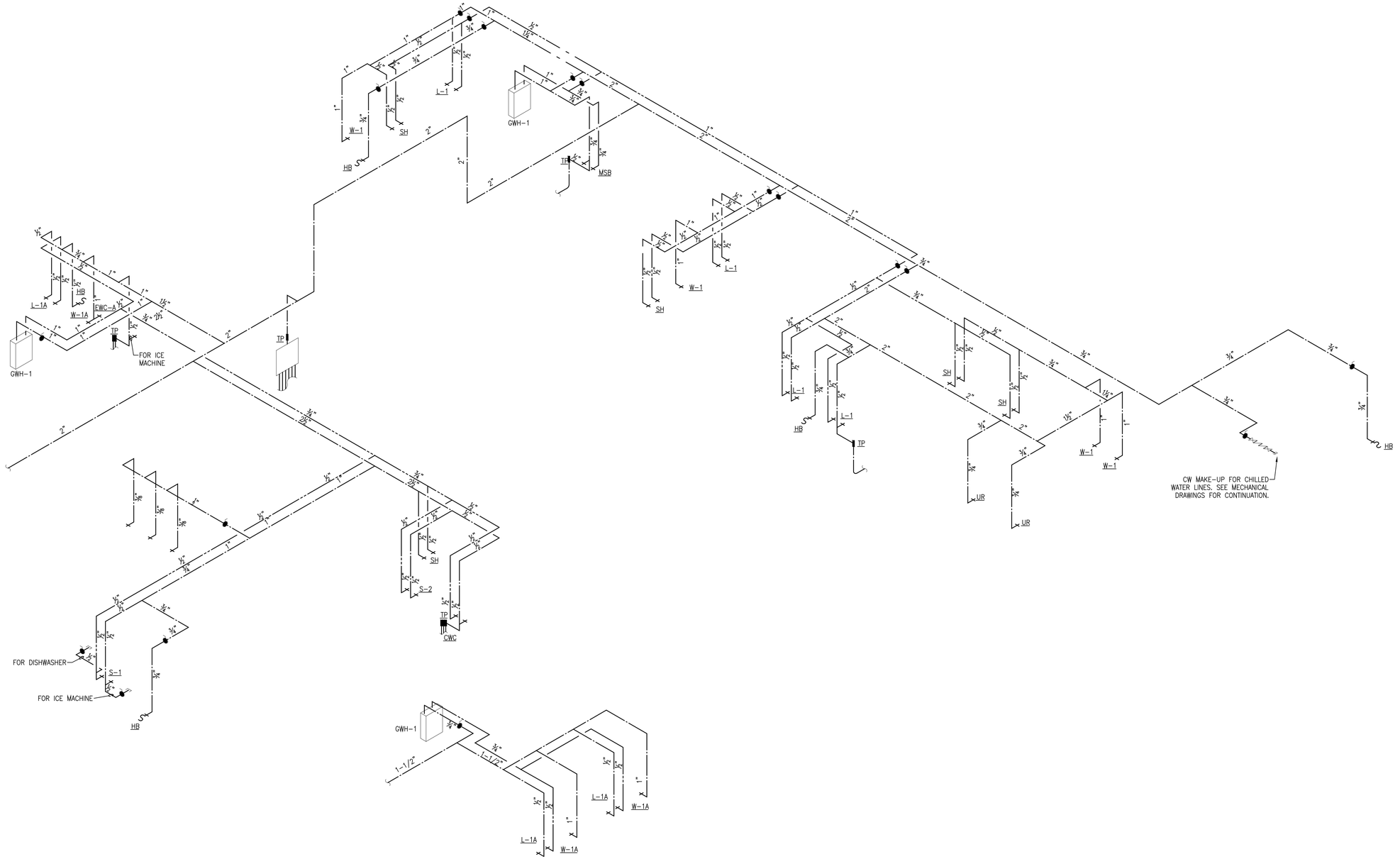

SUPPLY RISER
SCALE: NOT TO SCALE

CITY OF TAMPA
CONTRACT ADMINISTRATION
DEPARTMENT
PLANNING AND DESIGN DIVISION
306 E. JACKSON STREET 4 NORTH
TAMPA, FLORIDA 33602
p: 813. 274. 8456 - f: 813. 274. 8080
url: www.tampagov.net

James E. Jackson, Jr. AIA, NOMA
City Architect
Edward D. Rice, AIA
Project Architect
Kevin L. Henika, AIA
Project Architect
Thomas A. Hester, Sr., AIA, NOMA
Project Architect
David R. Pagitt
Supervisor, Architectural Drafting
Kinsey C. Tillman
Drafting Technician
Jerry P. Sanders
Drafting Technician
Byron K. Thomas, LEED AP
Drafting Technician

MEP CONSULTANT
GRINER ENGINEERING, INC.
1628 1st. AVENUE NORTH
ST. PETERSBURG, FL 33713

STRUCTURAL CONSULTANT
BILLER REINHART
STRUCTURAL GROUP, INC.
4014 GUNN HWY. SUITE 248
TAMPA, FL 33713

CIVIL CONSULTANT
B M CIVIL LLC
12315 WYCLIFF PLACE
TAMPA, FL 33626

LANDSCAPE CONSULTANT
DAVID CONNER & ASSOCIATES
1509 W. SWANN AVENUE,SUITE 255
TAMPA, FL 33606

FIRE STATION 23
20770 TROUT CREEK DR.
TAMPA, FL 33647

DPW FILE NUMBER

DPW NUMBER
17-C-00037

ISSUE DATE
07-28-2017

DRAWN BY

REVISIONS

SEAL

Joseph H. Griner III, P.E. FL. 39491

SCALE: N.T.S.

SUPPLY RISER

SHEET NUMBER
P-6.1
X OF X

GRINER
GRINER ENGINEERING, INC.
1628 First Avenue North
St. Petersburg, Florida 33713
Phone: (727)-822-2335
Fax: (727)-821-3361
Certificate of Authorization #3173

Date	06-15-2017
Drawn	JL
Designed	JL
EOR	JHG
Job no.	17049

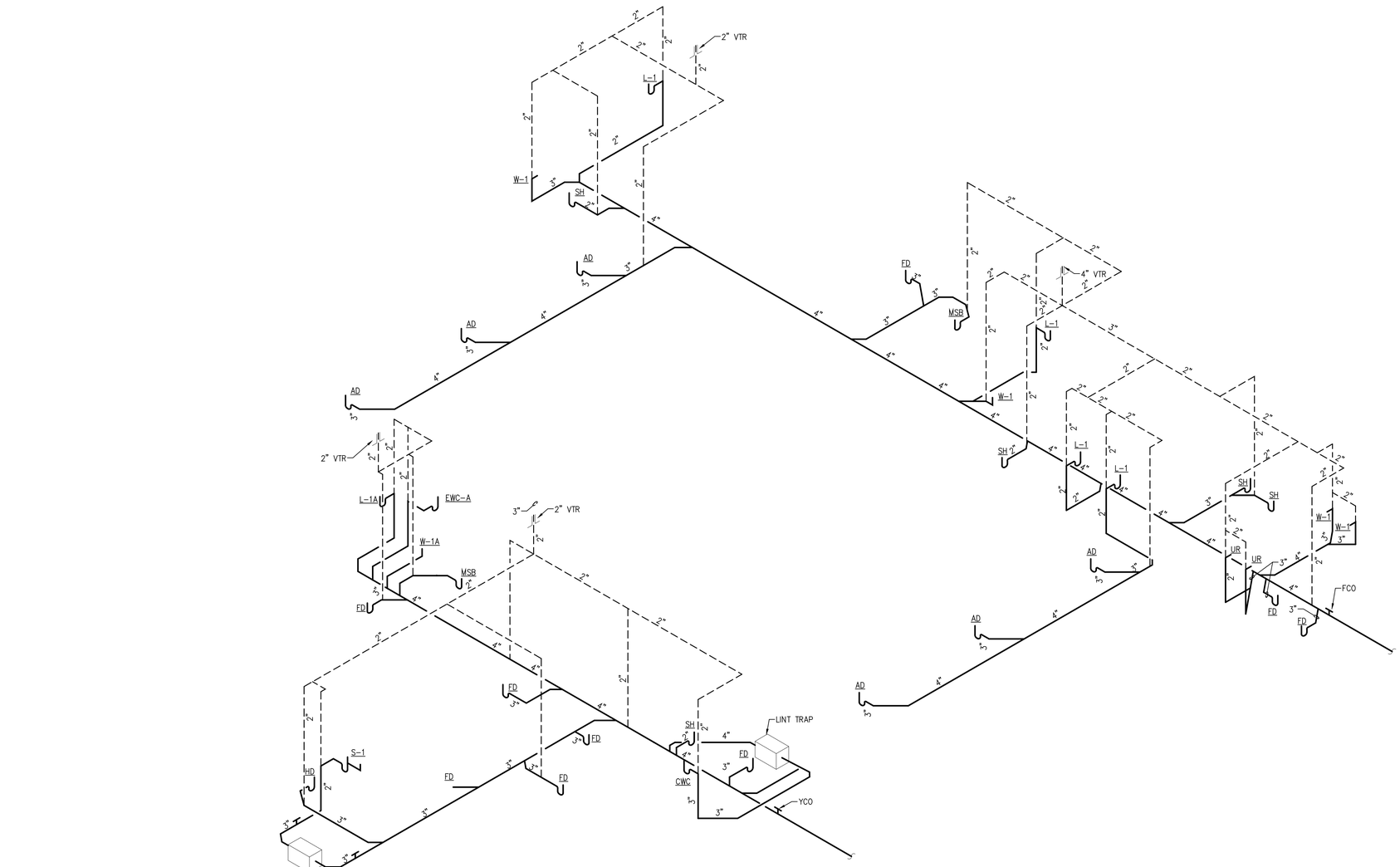

SANITARY RISER

SCALE: NOT TO SCALE

CITY OF TAMPA
CONTRACT ADMINISTRATION
DEPARTMENT
PLANNING AND DESIGN DIVISION

306 E. JACKSON STREET 4 NORTH
TAMPA, FLORIDA 33602
p: 813. 274. 8456 – f: 813. 274. 8080
url: www.tampagov.net

James E. Jackson, Jr. AIA, NOMA
City Architect

Edward D. Rice, AIA
Project Architect

Kevin L. Henika, AIA
Project Architect

Thomas A. Hester, Sr., AIA, NOMA
Project Architect

David R. Pagitt
Supervisor, Architectural Drafting

Kinsey C. Tillman
Drafting Technician

Jerry P. Sanders
Drafting Technician

Byron K. Thomas, LEED AP
Drafting Technician

MEP CONSULTANT
GRINER ENGINEERING, INC.
1628 1st. AVENUE NORTH
ST. PETERSBURG, FL 33713

STRUCTURAL CONSULTANT
BILLER REINHART
STRUCTURAL GROUP, INC.
4014 GUNN HWY. SUITE 248
TAMPA, FL 33713

CIVIL CONSULTANT
B M CIVIL LLC
12315 WYCLIFF PLACE
TAMPA, FL 33626

LANDSCAPE CONSULTANT
DAVID CONNER & ASSOCIATES
1509 W. SWANN AVENUE,SUITE 255
TAMPA, FL 33606

FIRE STATION 23
20770 TROUT CREEK DR.
TAMPA, FL 33647

DPW FILE NUMBER

DPW NUMBER
17-C-00037

ISSUE DATE
07-28-2017

DRAWN BY

REVISIONS

SEAL

Joseph H. Griner III, P.E. FL. 39491

SCALE: N.T.S.

SANITARY RISER

GRINER ENGINEERING, INC.
1628 First Avenue North
St. Petersburg, Florida 33713
Phone: (727)-822-2335
Fax: (727)-821-3361
Certificate of Authorization #3173

Date	06-15-2017
Drawn	JL
Designed	JL
EOR	JHG
Job no.	17049

SHEET NUMBER
P-6.2
X OF X

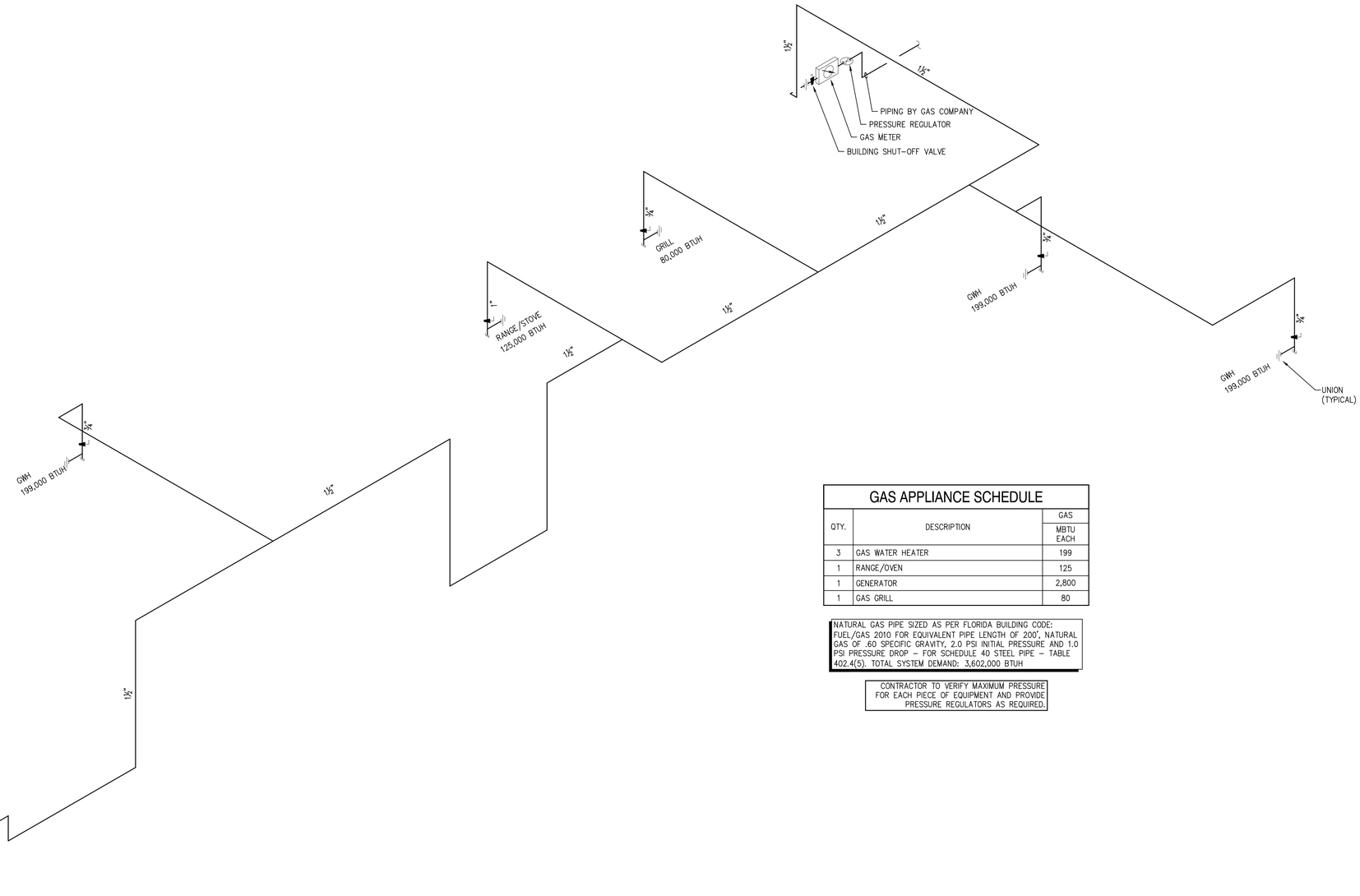

GAS APPLIANCE SCHEDULE		
QTY.	DESCRIPTION	GAS MBTU EACH
3	GAS WATER HEATER	199
1	RANGE/OVEN	125
1	GENERATOR	2,800
1	GAS GRILL	80

PROPANE GAS PIPE SIZED AS PER FLORIDA BUILDING CODE: FUEL/GAS 2010 FOR EQUIVALENT PIPE LENGTH OF 20', UNDILUTED PROPANE OF 1.50 SPECIFIC GRAVITY, 11" W.C. INITIAL PRESSURE AND 0.5" W.C. PRESSURE DROP – FOR SCHEDULE 40 STEEL PIPE – TABLE 402.4(28). TOTAL SYSTEM DEMAND: 2,800,000 BTUH

NATURAL GAS PIPE SIZED AS PER FLORIDA BUILDING CODE: FUEL/GAS 2010 FOR EQUIVALENT PIPE LENGTH OF 200', NATURAL GAS OF .60 SPECIFIC GRAVITY, 2.0 PSI INITIAL PRESSURE AND 1.0 PSI PRESSURE DROP – FOR SCHEDULE 40 STEEL PIPE – TABLE 402.4(5). TOTAL SYSTEM DEMAND: 3,602,000 BTUH

CONTRACTOR TO VERIFY MAXIMUM PRESSURE FOR EACH PIECE OF EQUIPMENT AND PROVIDE PRESSURE REGULATORS AS REQUIRED.

GAS RISER
SCALE: NOT TO SCALE

CITY OF TAMPA
CONTRACT ADMINISTRATION
DEPARTMENT
PLANNING AND DESIGN DIVISION

306 E. JACKSON STREET 4 NORTH
TAMPA, FLORIDA 33602
p: 813. 274. 8456 – f: 813. 274. 8080
url: www.tampagov.net

James E. Jackson, Jr. AIA, NOMA
City Architect
Edward D. Rice, AIA
Project Architect
Kevin L. Henika, AIA
Project Architect
Thomas A. Hester, Sr., AIA, NOMA
Project Architect
David R. Pagitt
Supervisor, Architectural Drafting
Kinsey C. Tillman
Drafting Technician
Jerry P. Sanders
Drafting Technician
Byron K. Thomas, LEED AP
Drafting Technician

MEP CONSULTANT
GRINER ENGINEERING, INC.
1628 1st. AVENUE NORTH
ST. PETERSBURG, FL 33713

STRUCTURAL CONSULTANT
BILLER REINHART
STRUCTURAL GROUP, INC.
4014 GUNN HWY. SUITE 248
TAMPA, FL 33713

CIVIL CONSULTANT
B M CIVIL LLC
12315 WYCLIFF PLACE
TAMPA, FL 33626

LANDSCAPE CONSULTANT
DAVID CONNER & ASSOCIATES
1509 W. SWANN AVENUE,SUITE 255
TAMPA, FL 33606

FIRE STATION 23
20770 TROUT CREEK DR.
TAMPA, FL 33647

DPW FILE NUMBER

DPW NUMBER
17-C-00037

ISSUE DATE
07-28-2017

DRAWN BY

REVISIONS

SEAL

Joseph H. Griner III, P.E. FL. 39491

SCALE: N.T.S.

GAS RISER

GRINER
GRINER ENGINEERING, INC.
1628 First Avenue North
St. Petersburg, Florida 33713
Phone: (727)-822-2335
Fax: (727)-821-3361
Certificate of Authorization #3173

Date	06-15-2017
Drawn	JL
Designed	JL
EOR	JHG
Job no.	17049

SHEET NUMBER
P-6.3
X OF X

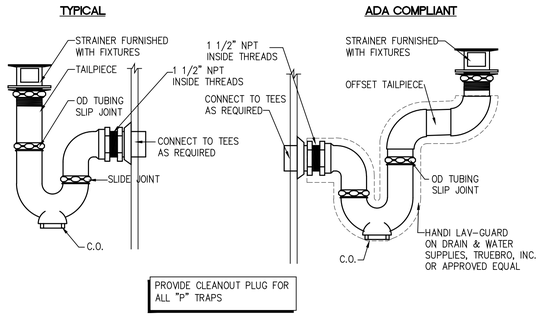

"P" TRAP WITH CLEANOUT DETAIL

NOT TO SCALE

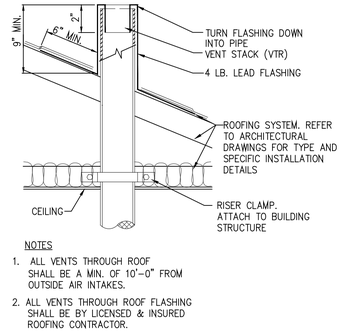

NOTES

1. ALL VENTS THROUGH ROOF SHALL BE A MIN. OF 10'-0" FROM OUTSIDE AIR INTAKES.
2. ALL VENTS THROUGH ROOF FLASHING SHALL BE BY LICENSED & INSURED ROOFING CONTRACTOR.

VENT THROUGH ROOF DETAIL

NOT TO SCALE

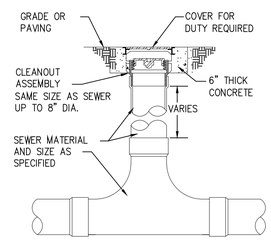

FLOOR AND YARD CLEANOUT DETAIL

NOT TO SCALE

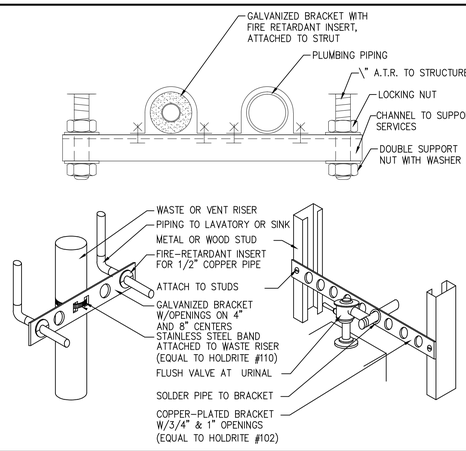

WATER PIPING SUPPORT DETAIL

NOT TO SCALE

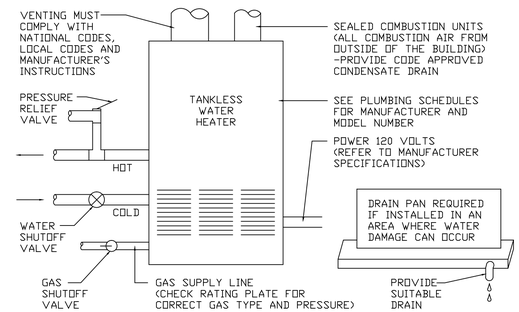

NOTES:
-WATER HEATER MUST BE INSTALLED TO CONFORM WITH CURRENT NATIONAL ELECTRIC CODE, NATIONAL FUEL GAS CODE, AND ANY APPLICABLE LOCAL PLUMBING, ELECTRICAL, HEATING AND AIR CONDITIONING CODES, AND MANUFACTURER INSTALLATION INSTRUCTIONS

TANKLESS WATER HEATER DETAIL

NOT TO SCALE

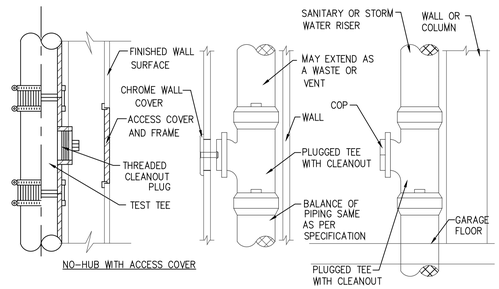

WALL AND RISER CLEANOUT DETAIL

NOT TO SCALE

CITY OF TAMPA
CONTRACT ADMINISTRATION DEPARTMENT
PLANNING AND DESIGN DIVISION
306 E. JACKSON STREET 4 NORTH
TAMPA, FLORIDA 33602
p: 813. 274. 8456 – f: 813. 274. 8080
url: www.tampagov.net

James E. Jackson, Jr. AIA, NOMA
City Architect
Edward D. Rice, AIA
Project Architect
Kevin L. Henika, AIA
Project Architect
Thomas A. Hester, Sr., AIA, NOMA
Project Architect
David R. Pagitt
Supervisor, Architectural Drafting
Kinsey C. Tillman
Drafting Technician
Jerry P. Sanders
Drafting Technician
Byron K. Thomas, LEED AP
Drafting Technician

MEP CONSULTANT
GRINER ENGINEERING, INC.
1628 1st. AVENUE NORTH
ST. PETERSBURG, FL 33713

STRUCTURAL CONSULTANT
BILLER REINHART STRUCTURAL GROUP, INC.
4014 GUNN HWY. SUITE 248
TAMPA, FL 33713

CIVIL CONSULTANT
B M CIVIL LLC
12315 WYCLIFF PLACE
TAMPA, FL 33626

LANDSCAPE CONSULTANT
DAVID CONNER & ASSOCIATES
1509 W. SWANN AVENUE,SUITE 255
TAMPA, FL 33606

FIRE STATION 23
20770 TROUT CREEK DR.
TAMPA, FL 33647

DPW FILE NUMBER

DPW NUMBER
17-C-00037

ISSUE DATE
07-28-2017

DRAWN BY

REVISIONS

SEAL

Joseph H. Griner III, P.E. FL. 39491

SCALE: N.T.S.

PLUMBING DETAILS

SHEET NUMBER
P-7.1
x OF x

GRINER
GRINER ENGINEERING, INC.
1628 First Avenue North
St. Petersburg, Florida 33713
Phone: (727)-822-2335
Fax: (727)-821-3361
Certificate of Authorization #3173

Date	06-15-2017
Drawn	JL
Designed	JL
EOR	JHG
Job no.	17049

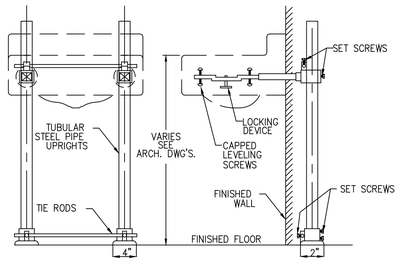

LAVATORY CARRIER
NOT TO SCALE

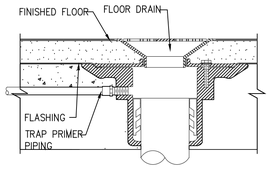

TRAP PRIMER CONNECTION DETAIL
NOT TO SCALE

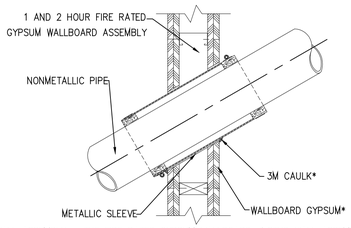

1. WALL ASSEMBLY – THE FIRE RATED GYPSUM WALLBOARD / STUD WALL ASSEMBLY SHALL BE CONSTRUCTED OF THE MATERIALS AND IN THE MANNER SPECIFIED IN THE INDIVIDUAL U300 OR U400 SERIES WALL AND PARTITION DESIGNS IN THE UL FIRE RESISTANCE DIRECTORY AND SHALL INCLUDE THE FOLLOWING CONSTRUCTION FEATURES: A. STUDS–WALL FRAMING MAY CONSIST OF EITHER WOOD STUDS OR STEEL CHANNEL STUDS. WOOD STUDS TO CONSIST OF NOM 2 BY 4 IN. LUMBER SPACED 16 IN. OG. STEEL STUDS TO BE MM 3–1/2 IN. WIDE AND SPACED MAX. 24 IN. OG.

B. WALLBOARD GYPSUM* –THICKNESS, TYPE, NUMBER OF LAYERS AND FASTENERS AS REQUIRED IN THE INDIVIDUAL WALL AND PARTITION DESIGN. DIAM OF OPENING IS MAX. 1/2 IN. LARGER THAN THE OUTSIDE DIAM OF STEEL SLEEVE (ITEM 3A). THE HOURLY F RATING OF THE FIRESTOP SYSTEM IS EQUAL TO THE HOURLY FIRE RATING OF THE WALL ASSEMBLY IN WHICH IT IS INSTALLED. THE T RATINGS ARE 0 AND 1/2 HR WHEN INSTALLED IN 1 HR AND 2 HR RATED WALLS, RESPECTIVELY.

2. THROUGH PENETRANTS – ONE NONMETALLIC PIPE OR CONDUIT TO BE CENTERED WITHIN THE FIRESTOP SYSTEM. PIPE OR CONDUIT TO BE RIGIDLY SUPPORTED ON BOTH SIDES OF FLOOR OR WALL ASSEMBLY. THE PIPE OR CONDUIT MAY BE INSTALLED AT AN ANGLE NOT GREATER THAN 45 DEGREES FROM PERPENDICULAR. THE FOLLOWING TYPES AND SIZES OF NONMETALLIC PIPES OR CONDUITS MAY BE USED:
A. NOM 4 IN. DIAM (OR SMALLER) SCHEDULE 40 SOLID CORE OR CELLULAR CORE POLYVINYL CHLORIDE (PVC) PIPE.
B. NOM 4 IN. DIAM (OR SMALLER) SDR17 CHLORINATED POLYVINYL CHLORIDE (PVC) PIPE.
C. NOM 4 IN. DIAM (OR SMALLER) SCHEDULE 40 (OR HEAVIER) SOLID CORE OR CELLULAR CORE ACRYLONITRUE BUTADIENE STYRENE (ABS) PIPE.

3. FIRESTOP SYSTEM – THE FIRESTOP SYSTEM SHALL CONSIST OF THE FOLLOWING:
A. METALLIC SLEEVE–CYLINDRICAL SLEEVE FABRICATED FROM MM 0.019 IN. THICK (26 GAUGE) GALV SHEET STEEL AND HAVING A MM 1 IN. LAP ALONG THE LONGITUDINAL SEAM. SLEEVE TO EXTEND A MM OF 2 IN. BEYOND BOTH SIDES OF THE WALL. THE INSIDE DIAM OF THE SLEEVE SHALL BE LARGER THAN OUTSIDE DIAM OF NONMETALLIC PIPE OR CONDUIT SUCH THAT AN ANNULAR SPACE WILL BE PRESENT BETWEEN THE STEEL SLEEVE AND THE PIPE AROUND THE ENTIRE CIRCUMFERENCE OF THE PIPE TO ACCOMMODATE THE LAYER(S) OF WRAP STRIPS (ITEM 3B). THE ANNULAR SPACE BETWEEN THE OUTSIDE OF THE WRAP STRIP LAYER(S) AND THE INSIDE OF THE SLEEVE SHALL BE MIN. 0 IN. TO MAX. 1/4 IN. THE ANNULAR SPACE BETWEEN THE OUTSIDE OF THE SLEEVE AND THE PERIPHERY OF THE OPENING SHALL BE MIN. 0 IN. TO MAX. 1/2 IN.
B. FILL, VOID OR CAVITY MATERIALS* – WRAP STRIP – NOM 1/4 IN. THICK INTUMESCENT ELASTOMERIC MATERIAL FACED ON ONE SIDE WITH ALUMINUM FOIL, SUPPLIED IN 2 IN WIDE STRIPS. NOM 2 IN. WIDE STRIPS TIGHTLY WRAPPED AROUND NONMETALLIC PIPE (FOIL SIDE EXPOSED) AND SLID INTO SLEEVE ON BOTH SIDES OF WALL SUCH THAT THE OUTER EDGES OF WRAP STRIPS ARE FLUSH WITH THE OUTER EDGES OF THE SLEEVE. FOR NOM 1/2 IN. TO NOM 1–1/2 IN. DIAM PIPES, A MIN. OF ONE LAYER OF WRAP STRIP IS REQUIRED. FOR NOM 2, 2– 1/2 IN. AND 3 IN. DIAM PIPES, A MIN. OF TWO LAYERS OF WRAP STRIP IS REQUIRED. FOR NOM 3–1/2 IN. AND 4 IN. DIAM PIPES, A MIN. OF THREE LAYERS OF WRAP STRIP IS REQUIRED. EACH LAYER OF WRAP STRIP TO BE INSTALLED WITH BUTTED SEAM WITH BUTTED SEAMS IN SUCCESSIVE LAYERS STAGGERED. WRAP STRIP LAYERS HELD IN POSITION USING ALUMINUM FOIL TAPE, STEEL WIRE TIE, OR EQUIVALENT. A MIN. 1/2 IN. WIDE STAINLESS STEEL HOSE CLAMP SHALL BE SECURED AROUND THE OUTSIDE OF THE SLEEVE OVER THE CENTER OF THE WRAP STRIPS ON BOTH ENDS OF THE SLEEVE.
C. FILL, VOID OR CAVITY MATERIALS* – CAULK – MIN. THICKNESS OF 5/8 IN. AND 1– 1/4 IN. FOR 1 AND 2 HR RATED WALL ASSEMBLIES, RESPECTIVELY, APPLIED WITHIN ANNULUS BETWEEN METALLIC SLEEVE AND PERIPHERY OF THE OPENING, FLUSH WITH BOTH SURFACES OF WALL ASSEMBLY. AT THE POINT CONTACT LOCATION BETWEEN SLEEVE AND GYPSUM WALLBOARD, A MIN. 1/2 IN DIAM BEAD OF CAULK SHALL BE APPLIED AT THE SLEEVE/WALLBOARD INTERFACE ON BOTH SURFACES OF WALL ASSEMBLY. A MIN. 1/4 IN. BEAD OF CAULK SHALL ALSO BE APPLIED OVER THE OUTER EDGES OF THE WRAP STRIPS AND WITHIN THE ANNULAR SPACE BETWEEN THE WRAP STRIP AND SLEEVE ON BOTH SIDES OF WALL.

1 AND 2 HOUR FIRE RATED PENETRATION FOR PLASTIC PIPE
NOT TO SCALE

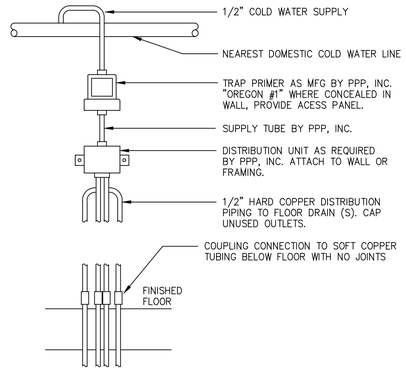

TRAP PRIMER DETAIL (OPTION 1)
NOT TO SCALE

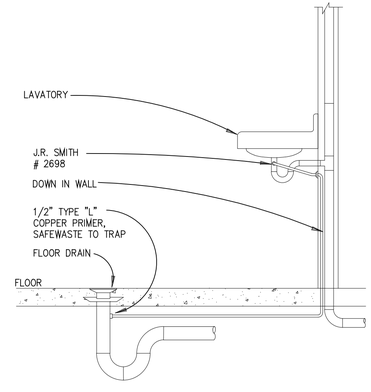

TRAP PRIMER DETAIL (OPTION 2)
NOT TO SCALE

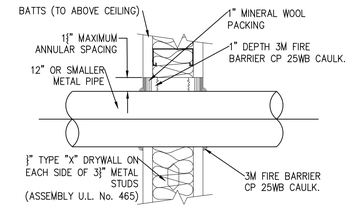

APPLICATION DETAILS
1. INSTALL THE FIRESTOP SYMMETRICALLY ON BOTH SIDES OF THE WALL ASSEMBLY
2. MINIMUM ANNULAR SPACE REQUIREMENT IS ZERO, POINT CONTACT. MAXIMUM ANNULAR SPACE ALLOWABLE (FOR 12" PIPE) IS 3/16–5/16 IN.
3. RECESS A NOMINAL 1 INCH THICKNESS OF LIGHTLY PACKED MINERAL WOOL SAFING }" FROM THE WALL SURFACE.
4. FILL THE ANNULAR SPACE AROUND THE PIPE WITH A MINIMUM |" –IN. DEPTH OF 3M FIRE BARRIER CP 25 CAULK.

1 HR FIRE RATED PENETRATION FOR METALLIC PIPE
NOT TO SCALE

CITY OF TAMPA
CONTRACT ADMINISTRATION DEPARTMENT
PLANNING AND DESIGN DIVISION
306 E. JACKSON STREET 4 NORTH
TAMPA, FLORIDA 33602
p: 813. 274. 8456 – f: 813. 274. 8080
url: www.tampagov.net

James E. Jackson, Jr. AIA, NOMA
City Architect
Edward D. Rice, AIA
Project Architect
Kevin L. Henika, AIA
Project Architect
Thomas A. Hester, Sr., AIA, NOMA
Project Architect
David R. Pagitt
Supervisor, Architectural Drafting
Kinsey C. Tillman
Drafting Technician
Jerry P. Sanders
Drafting Technician
Byron K. Thomas, LEED AP
Drafting Technician

MEP CONSULTANT
GRINER ENGINEERING, INC.
1628 1st. AVENUE NORTH
ST. PETERSBURG, FL 33713

STRUCTURAL CONSULTANT
BILLER REINHART STRUCTURAL GROUP, INC.
4014 GUNN HWY. SUITE 248
TAMPA, FL 33713

CIVIL CONSULTANT
B M CIVIL LLC
12315 WYCLIFF PLACE
TAMPA, FL 33626

LANDSCAPE CONSULTANT
DAVID CONNER & ASSOCIATES
1509 W. SWANN AVENUE,SUITE 255
TAMPA, FL 33606

FIRE STATION 23
20770 TROUT CREEK DR.
TAMPA, FL 33647

DPW FILE NUMBER

DPW NUMBER
17–C–00037

ISSUE DATE
07–28–2017

DRAWN BY

REVISIONS

SEAL

Joseph H. Griner III, P.E. FL. 39491

SCALE: N.T.S.

PLUMBING DETAILS

SHEET NUMBER
P–7.2
x OF x

GRINER
GRINER ENGINEERING, INC.
1628 First Avenue North
St. Petersburg, Florida 33713
Phone: (727)-822-2335
Fax: (727)-821-3361
Certificate of Authorization #3173

Date	06-15-2017
Drawn	JL
Designed	JL
EOR	JHG
Job no.	17049

PLUMBING SPECIFICATION

PART 1: GENERAL

1.01 GENERAL DOCUMENTS

A. THE REQUIREMENTS OF THE GENERAL CONDITIONS & APPLICABLE SECTIONS SHALL APPLY TO ALL PLUMBING WORK. INSTALLATION SHALL BE IN ACCORDANCE WITH THE CURRENT FLORIDA BUILDING CODE –PLUMBING.

B. THE PLUMBING WORK SHALL INCLUDE FURNISHING ALL LABOR, EQUIPMENT, MATERIALS AND SERVICE NECESSARY FOR AND REASONABLY INCIDENTAL TO THE PROPER COMPLETION OF ALL PLUMBING WORK SHOWN ON THE DRAWINGS AND AS SPECIFIED. ALL MATERIAL SHALL BE NEW.

C. ALL MATERIALS AND EQUIPMENT SHALL BE THE STANDARD CATALOGED PRODUCT OF A REPUTABLE MANUFACTURER REGULARLY MANUFACTURING THE PARTICULAR ITEM, FREE FROM DEFECTS AND IN NEW CONDITION.

1.02 SUBMITTALS A. MATERIALS OR PRODUCTS SPECIFIED HEREIN AND/OR INDICATED ON DRAWINGS BY TRADE NAME, MANUFACTURER'S NAME OR CATALOG NUMBERS SHALL BE INTERPRETED AS ESTABLISHING A STANDARD OF QUALITY AND DESIGN. SUBSTITUTIONS SHALL NOT BE ALLOWED UNLESS THEY ARE SUBMITTED FOR REVIEW AND APPROVED BY BID DATE.

1.03 WORK BY OTHERS

A. THE FOLLOWING SYSTEMS AND/OR EQUIPMENT ARE NOT A PART OF THIS SECTION, BUT SHALL BE PROPERLY CONNECTED WITH ALL PLUMBING SERVICES:
– ELECTRICAL POWER WIRING BY ELECTRICAL SUB–CONTRACTOR.
– FIRE PROTECTION SYSTEM

1.04 SHOP DRAWINGS FURNISH SIX (6) COPIES OF SHOP DRAWINGS OF EQUIPMENT OR FIXTURES FOR APPROVAL PRIOR TO PURCHASING.

1.05 RECORD DRAWINGS

A. AFTER COMPLETION OF ALL WORK THE PLUMBING CONTRACTOR SHALL PROVIDE THE OWNER WITH AS BUILT RECORD DRAWINGS AS OUTLINED IN SPECIFICATIONS.

PART 2: PRODUCTS

2.01 PIPING

A. SOIL, WASTE, VENT PIPING & STORM DRAINAGE PIPING: ABOVE FLOOR AND BELOW SLAB: INTERIOR ABOVE FIRST FLOOR SLAB SHALL BE PVC–DWV SCHEDULE 40 PIPE AND FITTING BELOW AND ABOVE SLAB EXCEPT ANY PIPING LOCATED WITHIN PLENUM SPACES OR FIRE RATED WALLS SHALL BE SERVICE WEIGHT CAST IRON, NO HUB, WITH STAINLESS STEEL CLAMPS AND SHIELDS WITH NEOPRENE SEALING SLEEVES.

B. DOMESTIC WATER PIPING: INTERIOR COLD, HOT AND HOT WATER RECIRCULATING PIPING ABOVE SLAB: DOMESTIC WATER PIPING SHALL BE TYPE L COPPER TUBING WITH LEAD FREE SOLDER JOINTS OR APPROVED PVC PIPING & FITTING. PVC PRESSURE TYPE PIPE & FITTINGS MAY BE USED ONLY IF APPROVED BY OWNER & LOCAL PLUMBING AUTHORITY.

C. PIPE INSULATION (COPPER TUBING): HOT WATER SUPPLY COPPER TUBING SHALL BE INSULATED WITH 1" THICK FIBERGLASS OR EQUAL, IN COMPLIANCE WITH APPLICABLE ENERGY CODES. ANY PIPING ABOVE SLAB RECEIVING COLD WATER DISCHARGE FROM A/C UNITS, ICE MACHINES, ETC. SHALL BE INSULATED WITH 1" THICK FIBERGLASS (OR EQUAL) INSULATION WITH VAPOR JACKET.

2.02 VALVES

A. EQUAL TO NIBCO, CRANE OR WALWORTH. ALL BRONZE 150 PSI. BALL OR GATE VALVES WITH RISING STEMS.

2.03 SPECIALTIES

A. PIPE PROTECTIVE COATING: FOR STEEL OR COPPER PIPE, PERMACEL OR SCOTCHWRAP VINYL TAPE APPLIED OVER PIPE TO A TOTAL MINIMUM THICKNESS OF 20 MILS. APPLY TO ALL WATER PIPE IN CONTACT WITH MASONRY OR CONCRETE.

B. PIPE HANGERS: HANGERS FOR BARE COPPER PIPE THROUGH 4 INCH (4") DIAMETER OR SMALLER SHALL BE ADJUSTABLE RING TYPE, PLASTIC COATED EQUAL TO MICHIGAN 102A, FOR STEEL PIPE MICHIGAN 100. ALL PIPE HANGERS IN AREA'S EXPOSED TO SALT ATMOSPHERE SHALL BE CORROSION RESISTANT. ALL WATER, SANITATION, STORM AND CONDENSATE STACKS SHALL HAVE A STACK CLAMP AT ALTERNATE FLOORS. HORIZONTAL & VERTICAL PIPE SUPPORT SHALL BE AS PER SCHEDULE BELOW:

PIPE HANGER SPACING TABLE

PIPE MATERIAL	PIPE SIZES (INCHES)	HORIZONTAL PIPE MAX. HANGER DISTANCE (FEET)	VERTICAL PIPE MAX. HANGER DISTANCE (FEET)
COPPER & COPPER ALLOY TUBING	1\" & SMALLER	6	10
COPPER & COPPER ALLOY TUBING	1\" & LARGER	10	10
COPPER & COPPER ALLOY PIPE	ALL	12	10
CAST IRON PIPE	ALL	4 *	15
STEEL PIPE	ALL	12	15
STAINLESS STEEL DRAINAGE SYSTEM	ALL	10	10 **
CPVC & PVC PIPE	ALL	4	10 **

NOTES:

* MAXIMUM HORIZONTAL SPACING OF CAST IRON PIPE HANGERS SHALL BE INCREASED TO TEN FEET WHERE 10' LENGTHS OF PIPE ARE USED.

** MIDSTORY GUIDE FOR SIZES 2" AND SMALLER

*** NOT ALL PIPE MATERIALS ON THIS TABLE WILL PERTAIN TO THIS PROJECT

C. DRAINS AND CLEANOUTS: SEE SCHEDULE ON DRAWINGS.

D. DIELECTRIC UNIONS: EBCO OR CAPITOL AT ALL POINTS OF CONNECTION BETWEEN DISSIMILAR PIPE METALS.

E. FLASHING AND VENT STACKS: ALL VENTS EXTENDING THROUGH THE ROOF SHALL BE PROVIDED WITH FOUR POUND SHEET LEAD FLASHING EXTENDING UPWARD AROUND THE PIPE AND TURNED DOWN INSIDE THE PIPE OR AS OTHERWISE SHOWN ON THE DRAWINGS. THE ROOF FLASHING SHALL BE INSTALLED BY LICENSED & INSURED ROOFING CONTRACTOR. ALL FLASHING IN METAL ROOF SHALL BE BY THE ROOF MANUFACTURER. MINIMUM DISTANCE FROM ANY FRESH AIR INTAKE SHALL BE 10'–0".

F. AIR CHAMBERS: AT EACH FIXTURE GROUP PROVIDE "SA" AS SPECIFIED IN SPECIALTIES SCHEDULE AND ELSEWHERE AS REQUIRED, AND IN ALL CONNECTIONS TO EQUIPMENT WITH SOLENOID VALVE INSTALLED ON WATER SUPPLY LINE PROVIDE ACCESS FOR WATER HAMMER ARRESTORS. THE WATER HAMMER ARRESTORS SHALL BE SIZED AND INSTALLED AS PER MANUFACTURER'S RECOMMENDATIONS.

G. ESCUTCHEONS AND SLEEVES: WHERE PIPES PIERCE EXPOSED PARTITIONS, FLOORS, WALLS OR CEILINGS, PROVIDE CHROME PLATED ESCUTCHEONS TO COVER THE RAW EDGE.

H. SLEEVES SHALL BE PROVIDED AT RATED WALL ALL PIPE PENETRATIONS OF MASONRY, BAY WALL, CONCRETE WALLS AND FLOORS.

I. PROVIDE UL LISTED FIRE STOPPING PIPE PENETRATION ASSEMBLIES AT ALL PIPING THROUGH RATED WALLS AND ASSEMBLIES. SEE DETAILS ON THE DRAWING.

2.04 FIXTURES AND TRIM

A. ALL EXPOSED METAL TO BE CHROME PLATED. PROVIDE STOPS AND UNIONS AT ALL SUPPLIES AND CAST BRASS 'P' TRAPS WITH CLEANOUT ON ALL WASTE.

B. FIXTURES BY AMERICAN STANDARD, KOHLER, ELJER, STERLING OR APPROVED EQUAL.

PART 3: EXECUTION

3.01. INSTALLATION

A. INSTALL PIPE ABOVE GROUND PLUMB AND SQUARE WITH BUILDING LINES, ADEQUATELY SUPPORTED WITHOUT SAGS OR HIGH POINTS. CONCEAL PIPING IN OCCUPIED AREAS AND MAINTAIN HEAD ROOM AND ACCESS SPACE IN UNFINISHED AREAS. SLEEVE PIPING THROUGH ALL WALLS, SLABS OR PARTITIONS WITH ESCUTCHEONS AT ALL FINISHED SURFACE. PROVIDE UNIONS AT ALL FINAL CONNECTIONS AND STOPS ON ALL SUPPLIES. ALL PIPE OPENINGS SHALL BE PLUGGED DURING INSTALLATION.

B. SANITARY DRAINAGE PIPING 3" & LARGER SHALL BE INSTALLED WITH A MINIMUM ⅛" PER FOOT SLOPE UNLESS NOTED OTHERWISE. ALL DRAINAGE PIPING 2½" AND SMALLER SHALL BE INSTALLED WITH A MINIMUM OF ¼" PITCH PER FOOT.

C. ALL FIXTURES AND TRIM FOR HANDICAPPED SHALL BE INSTALLED IN COMPLIANCE WITH ADA CODE.

D. INSTALL ALL PIPING TO ALLOW FOR EXPANSION.

E. SEE RISER DIAGRAMS FOR ALL DRAINAGE & VENT PIPE SIZING FOR THE PLUMBING SYSTEMS. REFER TO PLUMBING FLOOR PLAN (WATER SYSTEM) & SCHEDULES FOR ALL WATER PIPING SYSTEM SIZING.

F. ALL EXPOSED TO VIEW PIPING AND FITTINGS SHALL BE POLISHED CHROME FINISH.

G. ALL WORK HANDICAPPED TOILETS SHALL COMPLY WITH ADA REQUIREMENTS. & FLORIDA BUILDING CODE – CHAPTER 11 FLORIDA ACCESSIBILITY CODE FOR BUILDING CONSTRUCTION.

H. FINAL CONNECTIONS TO DRAINAGE AND WATER SERVICE LINES TO EXISTING OR NEW AT 5'–0" FROM THE BUILDING WALLS SHALL BE BY THE PLUMBING CONTRACTOR.

3.02. DISINFECTING OF POTABLE WATER SYSTEM:

A. THE SYSTEM SHALL BE FILLED WITH A SOLUTION CONTAINING 50 PARTS PER MILLION OF AVAILABLE CHLORINE AND ALLOWED TO STAND SIX HOURS BEFORE FLUSHING AND RETURNING TO SERVICE. DISINFECTION PROCEDURE AND RESULT SHALL BE SUBJECT TO THE APPROVAL OF THE LOCAL PLUMBING INSPECTOR.

3.03. TESTS

A. ALL PLUMBING SYSTEMS SHALL BE TESTED IN ACCORDANCE WITH THE FLORIDA BUILDING CODE–PLUMBING. ALL TESTS SHALL BE APPROVED BY THE LOCAL PLUMBING INSPECTOR AND SHALL BE OBSERVED BY A REPRESENTATIVE OF THE ARCHITECT.

3.04. SYSTEM IDENTIFICATION

A. THE PLUMBING CONTRACTOR SHALL PROVIDE IDENTIFICATION TAGS FOR ALL PIPING AND VALVES IN THE BUILDING AS PER OWNER ACCEPTED STANDARDS. THE PIPE MARKS SHALL INCLUDE PIPING SYSTEM IDENTIFICATION AND DIRECTIONS OF FLOW.

3.05 SPECIFICATIONS AND DRAWINGS

A. PLUMBING CONTRACTOR SHALL FURNISH AND INSTALL COMPLETE SANITARY, STORM AND DOMESTIC WATER PIPING SYSTEMS: INCLUDING ALL ASSOCIATED DEVICES, EQUIPMENT, CONTROLS, AND CONNECTIONS TO NEW SERVICES, SUPPORTS, AND HARDWARE REQUIRED FOR THE SATISFACTORY OPERATION OF THE SYSTEMS, WHETHER SPECIFICALLY SHOWN OR NOT ON THE DRAWINGS.

B. THE PLANS SHOW THE LOCATION OF ALL FIXTURES AND EQUIPMENT AND ARE INTENDED TO DEPICT THE GENERAL INTENT OF THE WORK IN SCOPE, LAYOUT AND QUALITY OF WORKMANSHIP. THEY ARE NOT INTENDED TO SHOW IN MINUTE DETAIL EVERY AND ALL ACCESSORIES INTENDED FOR THE PURPOSE OF EXECUTION OF THE WORK, BUT IT SHALL BE UNDERSTOOD THAT SUCH DETAILS WILL BE PART OF THIS WORK.

C. WHERE DRAWINGS AND SPECIFICATIONS CONFLICT, IT SHALL BE THE RESPONSIBILITY OF THIS CONTRACTOR TO BRING SUCH CONFLICT TO THE ATTENTION OF THE ENGINEER FOR CLARIFICATION.

D. REFER TO ARCHITECTURAL DRAWINGS FOR EXACT LOCATION OF ALL PLUMBING FIXTURES.

E. CONTRACTOR SHALL KEEP A RECORD OF THE LOCATIONS OF ALL CONCEALED WORK AND, UPON COMPLETION OF THE JOB, SHALL SUPPLY AS–BUILT DRAWINGS SHOWING IN COLORED PENCIL ON BLACK LINE PRINTS ANY DEVIATION FROM THE ORIGINAL DRAWINGS. THESE DRAWINGS SHALL INDICATE DIMENSIONS OF BURIED UTILITY LINES FROM BUILDING WALLS.

F. ALL DOCUMENTS, TEST REPORTS & AS–BUILTS DRAWINGS SHALL BE ATTACHED TO THE CLOSING DOCUMENT OF THE PROJECT.

3.06 WARRANTY:

A. THE PLUMBING CONTRACTOR SHALL WARRANT HIS WORK TO BE FREE FROM DEFECTS IN MATERIALS AND AND WORKMANSHIP FOR A PERIOD OF ONE YEAR FROM FINAL ACCEPTANCE OF ALL WORK.

3.07 COORDINATION

A. THE CONTRACTOR DOING THE SHEET METAL SHOP DRAWINGS AND THE PLUMBING, FIRE PROTECTION, AND HVAC FOREMAN AND GENERAL CONTRACTOR PROJECT MANAGER SHALL INSPECT & REVIEW THE CONDITIONS, AND SHALL COORDINATE THEIR WORK SO AS TO PROVIDE ADEQUATE SPACE ALLOWANCE ABOVE CEILING FOR ALL TRADES. ALL GRAVITY WASTE PIPING IN THE CEILING SPACE SHALL BE INSTALLED FIRST.

B. VERIFY LOCATIONS, SIZES, AND INVERT ELEVATIONS OF SANITARY DRAIN, AND DOMESTIC WATER PIPING CONNECTIONS WITH CIVIL ENGINEERING DRAWINGS PRIOR TO PROCEEDING WITH THE INSTALLATION OF ANY NEW WORK. SHOULD ANY DISCREPANCIES BE DISCOVERED CONTRACTOR SHALL OBTAIN DIRECTION FROM THE ENGINEER BEFORE PROCEEDING.

C. COORDINATE WITH ARCHITECTURAL DRAWINGS WALL AND PARTITION CONSTRUCTION AND THICKNESS WHERE PLUMBING PIPING, FIXTURES CARRIERS OR EQUIPMENT IS INDICATED. BEFORE PLUMBING PIPING ROUGH–IN.

D. COORDINATE EXACT LOCATION, ELEVATIONS AND SIZES OF ALL SLEEVES IN NEW STRUCTURE WITH STRUCTURAL AND ARCHITECTURAL DRAWINGS.

3.08 PERMITS

A. PLUMBING CONTRACTOR SHALL OBTAIN ALL NECESSARY PERMITS AT HIS EXPENSE.

GRINER ENGINEERING, INC.
1628 First Avenue North
St. Petersburg, Florida 33713
Phone: (727)-822-2335
Fax: (727)-821-3361
Certificate of Authorization #3173

Date	06-15-2017
Drawn	JL
Designed	JL
EOR	JHG
Job no.	17049

CITY OF TAMPA
CONTRACT ADMINISTRATION DEPARTMENT
PLANNING AND DESIGN DIVISION
306 E. JACKSON STREET 4 NORTH
TAMPA, FLORIDA 33602
p: 813. 274. 8456 – f: 813. 274. 8080
url: www.tampagov.net

James E. Jackson, Jr. AIA, NOMA
City Architect
Edward D. Rice, AIA
Project Architect
Kevin L. Henika, AIA
Project Architect
Thomas A. Hester, Sr., AIA, NOMA
Project Architect
David R. Pagitt
Supervisor, Architectural Drafting
Kinsey C. Tillman
Drafting Technician
Jerry P. Sanders
Drafting Technician
Byron K. Thomas, LEED AP
Drafting Technician

MEP CONSULTANT
GRINER ENGINEERING, INC.
1628 1st. AVENUE NORTH
ST. PETERSBURG, FL 33713

STRUCTURAL CONSULTANT
BILLER REINHART STRUCTURAL GROUP, INC.
4014 GUNN HWY. SUITE 248
TAMPA, FL 33713

CIVIL CONSULTANT
5 M CIVIL LLC
12315 WYCLIFF PLACE
TAMPA, FL 33626

LANDSCAPE CONSULTANT
DAVID CONNER & ASSOCIATES
1509 W. SWANN AVENUE,SUITE 255
TAMPA, FL 33606

FIRE STATION 23
20770 TROUT CREEK DR.
TAMPA, FL 33647

DPW FILE NUMBER

DPW NUMBER
17–C–00037

ISSUE DATE
07–28–2017

DRAWN BY

REVISIONS

SEAL

Joseph H. Griner III, P.E. FL. 39491

SCALE: N.T.S.

PLUMBING SPECIFICATIONS

SHEET NUMBER
P–8.0
X OF X

FIRE PROTECTION NOTES

1. THE NEW AREA TO BE 100 PERCENT SPRINKLED. SPRINKLER SYSTEM THROUGHOUT MUST BE INSTALLED AND CONTROLLED BY SEPARATE FLOW AND TAMPER SWITCHES. THE PROPOSED SPRINKLER SYSTEM SHALL BE INSTALLED IN ALL ROOMS, IN ACCORDANCE WITH THE LATEST ADAPTED BY STATE FIRE MARSHAL RULE 69A–3.012 F.A.C., THE FLORIDA SPECIFIC EDITION OF NFPA–101 THE LIFE SAFETY CODE, THE FLORIDA SPECIFIC EDITION OF NFPA–1 UNIFORM FIRE CODE, AS ADAPTED WITHIN RULE CHAPTER 69A–60 F.A.C. FLORIDA FIRE PREVENTION CODE", UL AND FM REQUIREMENTS SHALL BE TAKE PRECEDENCE FOR THE FIRE PROTECTION SYSTEM INSTALLATION IF SET STRINGENT STANDARDS OR ADD ADDITIONAL REQUIREMENTS OVER STANDARDS LISTED.
2. OTHER ADAPTED & INCORPORATED BY REFERENCE BY THE STATE FIRE MARSHALL SHALL BE APPLICABLE TO THIS PROJECT THE FOLLOWING STANDARDS:
   NFPA–13 STANDARD FOR INSTALLATION OF SPRINKLER SYSTEMS,
   NFPA–24 STANDARDS FOR THE INSTALLATION OF PRIVATE FIRE SERVICE MAINS AND THEIR APPUTENANCES,
   NFPA–25 STANDARD FOR INSPECTION, TESTING AND MAINTENANCE OF WATER – BASED FIRE PROTECTION SYSTEMS,
   NFPA–51B STANDARD FOR FIRE PREVENTION DURING WELDING, CUTTING AND OTHER HOT WORK.
   NFPA–70 NATIONAL ELECTRICAL CODE,
   NFPA–72 NATIONAL FIRE ALARM CODE,
   NFPA–101A GUIDE, ON ALTERNATIVE APPROACHES TO LIFE SAFETY,
   NFPA–101B STANDARD ON MEANS OF EGRESS FOR BUILDING & STRUCTURES,
   NFPA–241 (STANDARD FOR SAFE GUARDING BUILDING CONSTRUCTION & DEMOLITION OPERATIONS,
3. FLORIDA BUILDING CODE – BUILDING 2014 AND OTHER CODES & STANDARDS LATEST EDITIONS AS ADAPTED BY THE STATE FIRE MARSHALL.
4. THE FIRE PROTECTION CONTRACTOR SHALL VISIT THE JOB SITE AND CHECK THE EXISTING SITE CONDITIONS BEFORE SUBMITTING HIS BID PACKAGE.
5. SPRINKLER SYSTEM NEW WORK SHALL BE PERFORMED AT THE TIME AS PER GENERAL CONTRACTOR SCHEDULE.
6. THE FIRE PROTRACTION CONTRACTOR SHALL INCLUDE IN HIS BID PACKAGE ALL ADDITIONAL WORK, MATERIAL, TESTS, AND INSPECTIONS AS A RESULT OF THE PROJECT SEQUENCES.
7. THE NEW SPRINKLER SYSTEM PIPE SIZES ARE HYDRAULICALLY CALCULATED FOR HAZARD OCCUPANCY AS NOTED ON THE FLOOR PLANS.
8. CONTRACTOR SHALL INCLUDE IN HIS BID PACKAGE COST OF ALL OFFSETS, AUXILIARY DRAINS, FLUSHING CONNECTIONS WITH RELATED PIPING, FITTINGS AND HANGERS TO COMPLETE THE INSTALLATION. THERE SHALL NOT BE APPLIED ANY EXTRA COST TO THE OWNER RESULTING FROM THE COORDINATION OF SPRINKLERS SYSTEM INSTALLATION ON THIS SITE.
9. THE SUCCESSFUL FIRE PROTECTION CONTRACTOR SHALL INSTALL THE SPRINKLER SYSTEM AS PER CONTRACT DOCUMENT DRAWINGS & SPECIFICATIONS. SPRINKLER FABRICATION DRAWINGS SHALL BE PROVIDED ALONG WITH MATERIAL & EQUIPMENT DATA SHEETS FOR ARCHITECT, ENGINEERS & SIEMENS PROJECT MANAGER REVIEW & APPROVAL.
10. THIS CONTRACTOR SHALL PROVIDE ALL MATERIAL, EQUIPMENT, SPRINKLER GUARDS, OTHER ITEM AS REQUIRED FOR COMPLETION OF THE SPRINKLERS INSTALLATION, AND FINAL TESTS AND APPROVALS BY LOCAL AUTHORITY HEAVING JURISDICTION AS PER LATEST ADAPTED NFPA–13 STANDARDS.
11. THE CONTRACTOR DOING THE SHEET METAL SHOP DRAWINGS AND THE PLUMBING, FIRE PROTECTION, ELECTRICAL, FIRE ALARM CONTRACTORS, HVAC FOREMAN AND THE GENERAL CONTRACTOR'S PROJECT MANAGER SHALL INSPECT & REVIEW THE CONDITIONS ABOVE THE NEW CEILING AND SHALL COORDINATE THEIR WORK SO AS TO PROVIDE ADEQUATE SPACE ALLOWANCE ABOVE CEILING FOR ALL TRADES. ALL GRAVITY WASTE PIPING IN CEILING SPACE SHALL BE INSTALLED FIRST.
12. SPRINKLER PIPING, FITTING, PIPE HANGERS MATERIAL SHALL BE AS PER NFPA–13 STANDARDS.
13. ALL FLOW, TAMPER SWITCHES & OTHER SENSORS AS INDICATED ON THE DRAWINGS FOR THE FIRE PROTECTION SYSTEM SHALL BE FURNISHED & INSTALLED ABOVE THE FLOOD LEVEL BY THE FIRE PROTECTION CONTRACTOR. WIRING FROM THE SENSORS TO FIRE ALARM PANELS SHALL BE BY THE ELECTRICAL & FIRE ALARM CONTRACTORS.
14. COORDINATE SPRINKLER AND BRANCH LINE LOCATION IN ELECTRICAL ROOMS. THE BRANCH LINES IN ELECTRICAL ROOMS SHALL NOT RUN OVER ELECTRICAL PANELS.
15. THE SPRINKLERS TEMPERATURE RATING SHALL BE AS PER NFPA–13 STANDARDS IF NOT SPECIFICALLY NOTED ON THE PLANS.
16. SPRINKLERS IN MECHANICAL & ELECTRICAL ROOMS SHALL BE 200'F TEMPERATURE RATING, QUICK RESPONSE WITH SPRINKLERS GUARDS.
17. PERMANENTLY ATTACHED INFORMATION TAGS & LABELS SHALL BE PROVIDED FOR CONTROL VALVES, DRAINS AND INSPECTOR TEST VALVES AS PER NFPA–13 AND OWNERS APPROVED STANDARDS.
18. THIS CONTRACTOR SHALL INCLUDE COST OF INSTALLATION ADDITIONAL 15 SPRINKLERS (HEADS, PIPING, FITTING & HANGERS) AS A RESULT OF THE FIELD CONDITIONS AND COORDINATION WITH OTHER TRADES.
19. FIRE PROTECTION CONTRACTOR SHALL PROVIDE SCAFFOLDS REQUIRED FOR SPRINKLER SYSTEM INSTALLATION.
20. EXISTING CITY UNDERGROUND WATER MAIN SHOWN ON SITE PLAN FOR SPRINKLER SYSTEM CALCULATIONS ONLY. NEW FIRE FEED MAIN, BACK FLOW PREVENTOR, FIRE DEPARTMENT CONNECTION, POST INDICATING VALVE, PRIVATE FIRE HYDRANTS FOR BUILDING SHALL AS PER CIVIL ENGINEERING DRAWINGS. THE SITE CONTRACTOR SHALL EXTEND FIRE SERVICE LINE FROM 5'–0" FROM THE BUILDING EXTERIOR WALL TO NEW SPRINKLER SYSTEM AS SHOWN ON SITE PLAN & GROUND FLOOR PLAN.
21. THE DOMESTIC WATER SERVICE LINE, SHOWN ON THE SITE PLAN SHALL NE SEPARATE FROM THE BUILDING FIRE MAIN AND SHALL BE CONSTRUCTED AS PER CIVIL ENGINEERS DRAWINGS.
22. CONTRACTOR SHALL KEEP A RECORD DRAWINGS A SPECIALLY LOCATIONS OF ALL CONCEALED WORK AND, UPON COMPLETION OF THE JOB, SHALL SUPPLY AS–BUILT DRAWINGS SHOWING IN COLORED PENCIL ON BLACK LINE PRINTS ANY DEVIATION FROM THE ORIGINAL FABRICATION DRAWINGS. THESE DRAWINGS SHALL INDICATE DIMENSIONS, LENGTHS, DISTANCE FROM WALLS & PIPE SUPPORTS LOCATIONS OF ALL CONCEALED LINES. THE AS–BUILT DRAWINGS SHALL BE PART OF THE CLOSE–OUT DOCUMENT PACKAGE.
23. FINAL APPROVAL OF THE ENTIRE SYSTEM IS REQUIRED FROM THE LOCAL AUTHORITY HAVING JURISDICTION.
24. WARRANTY THE FIRE PROTECTION CONTRACTOR SHALL WARRANT HIS WORK TO BE FREE FROM DEFECTS IN MATERIALS AND AND WORKMANSHIP FOR A PERIOD OF ONE YEAR FROM FINAL ACCEPTANCE OF ALL WORK.

ABBREVIATIONS

ABBREVIATIONS	DESCRIPTION	ABBREVIATIONS	DESCRIPTION
ACV	ALARM CHECK VALVE	F.P.C.	FIRE PROTECTION CONTRACTOR
AFG	ABOVE FINISHED GRADE	FS	FLOW SWITCH
AFF	ABOVE FINISHED FLOOR	GALV.	GALVANIZED
ALV	ALARM VALVE	G.C.	GENERAL CONTRACTOR
ATR	ALL THREAD ROD	GLV	GLOBE VALVE
AUX.	AUXILIARY	GPM	GALLONS PER MINUTE
BFP	BACK FLOW PREVENTER	GR	GROOVED
BIV	BUTTERFLY INDICATING VALVE	HMD	HYDRAULICALLY MOST DEMANDING
BL	BRANCH LINE	ID	IDENTIFICATION
BLV	BALL VALVE	INV	INVERT
BLDG	BUILDING	ITV	INSPECTOR'S TEST VALVE ASSEMBLY
BTN	BETWEEN	M.C.	MECHANICAL CONTRACTOR
C.E.	CIVIL ENGINEERS	N.C.	NORMALLY CLOSED
CI	CAST IRON	NFPA	NATIONAL FIRE PROTECTION ASSOCIATION.
℄	CENTERLINE	NIC	NOT IN CONTRACT
CONC	CONCRETE	N.O.	NORMALLY OPEN
CPVC	CHLORINATED POLYVINYL CHLORIDE	N.T.S	NOT TO SCALE
CR	CORROSION RESISTANT	OH	OVERHEAD
CV	CHECK VALVE	OSY	OUTSIDE SCREW AND YOKE
DIA. OR~	DIAMETER	PIV	POST INDICATOR VALVE
DIP	DUCTILE IRON PIPE (CL 50 U.O.N.)	PSI	POUNDS PER SQUARE INCH
DN.	DOWN	PVC	POLYVINYL CHLORIDE
DS	DRY SYSTEM	R	RADIUS
DV	DELUGE VALVE	RCP	REFLECTED CEILING PLAN
EAG	ELECTRICAL ALARM GONG	RP	REDUCED PRESSURE
E.C.	ELECTRICAL CONTRACTOR	RPBFP	REDUCED PRESSURE BACK FLOW PREVENTER
ELE.	ELECTRIC	S.C.	SITE CONTRACTOR
EX.	EXISTING	SCH	SCHEDULE
EXC	EXTENDED COVERAGE	SPK	SPRINKLER
FA	FIRE ALARM	TB	TRUST BLOCK
FCV	FLOOR CONTROL VALVE	THR	THREADED
FDC	FIRE DEPARTMENT CONNECTION	TS	TAMPER SWITCH
FDV	FIRE DEPARTMENT VALVE	TYP.	TYPICAL
FH	FIRE HYDRANT	UG	UNDER GROUND
FHR	FIRE HOSE RACK	U.O.N.	UNLESS OTHERWISE NOTED
FL	FLANGED	V.I.F.	VERIFY IN FIELD
FLR	FLOOR	WEG	WATER ELEC.. GONG

NOTE: NOT ALL ABBREVIATIONS ARE USED FOR THIS PROJECT..

PLUMBING FLOW TEST DATA

HYDRANT #	–
LOCATION	20770 TROUT CREEK GG–18–1–17
STATIC	65
RESIDUAL	60
FLOW (GPM)	1278
DATE	5/25/17
TIME	9:00 AM
PERFORMED BY	TAMPA WATER DEPARTMENT

ALL MATERIAL, DEVICES, AND EQUIPMENT MUST COMPLY WITH BUY AMERICAN REQUIREMENTS OF AMERICAN RECOVERY & REINVESTMENT ACT.

FIRE PROTECTION LEGEND

SYMBOL	DESCRIPTION
F	EX. UNDERGROUND FIRE LINE (SEE CIVIL ENGINEERING DRAWINGS)
W	CITY WATER MAIN (SEE CIVIL ENGINEERING DRAWINGS)
AS	CROSS MAIN WET SYSTEM
DS	CROSS MAIN DRY SYSTEM
	BRANCH LINE WITH PIPE HANGER
OR	DROP NIPPLE TO SPRINKLERS
ID	SPRINKLER DRAIN PIPING
	PENDENT RECESSED SPRINKLER HEADS
	PENDENT CONCEALED
	UPRIGHT SPRINKLER HEADS
	UPRIGHT SPRINKLERS WITH GUARD
	SIDEWALL SPRINKLERS WITH GUARD
	POINT OF CONNECTION TO EXISTING PIPING
	VALVE WITH TAMPER SWITCH
	CHECK VALVE
OR	PROPOSED FIRE DEPARTMENT CONNECTION (SHOWN FOR REFERENCE ONLY)
	PRESSURE GAUGE
OR FS	WATER FLOW SWITCH
	NEW FIRE HYDRANT (SEE C.E. DRAWINGS)
BFP	BACK FLOW PREVENTER
	EX. FIRE HYDRANT (SEE C.E. DRAWINGS)
	EX. ELECTRIC ALARM BELL
	WIRING TO ALARM SYSTEM (BY E.C.)
	FLOOR CONTROL VALVE ASSEMBLY
	FLOOR INSPECTOR TEST VALVE ASSEMBLY
	EX. FIRE HOSE VALVE
SureFire	PREACTION SYSTEM CONTROL CABINET ASSEMBLY
(RISER) (PLAN)	ANGLE DELUGE VALVE & TRIM.
X	HYDRAULIC CALCULATION INDICATOR

NOTE: SOME SYMBOLS SHOWN ON THIS LEGEND MAY NOT PERTAIN TO THIS PROJECT.

FIRE PROTECTION DRAWING INDEX

SHEET	DESCRIPTION
FP–1.0	FIRE PROTECTION DRAWING INDEX, GENERAL NOTES, LEGENDS AND FLOW & PRESSURE TEST DATA
FP–2.0	FIRE PROTECTION SITE PLAN
FP–3.0	FIRE PROTECTION FLOOR PLAN
FP–3.1	FIRE PROTECTION ATTIC PLAN
FP–4.0	FIRE PROTECTION DETAILS
FP–5.0	FIRE PROTECTION SPECIFICATION

GRINER ENGINEERING, INC.
1628 First Avenue North
St. Petersburg, Florida 33713
Phone: (727)-822-2335
Fax: (727)-821-3361
Certificate of Authorization #3173

Date	06-15-2017
Drawn	JL
Designed	JL
EOR	JHG
Job no.	17049

CITY OF TAMPA
CONTRACT ADMINISTRATION DEPARTMENT
PLANNING AND DESIGN DIVISION
306 E. JACKSON STREET 4 NORTH
TAMPA, FLORIDA 33602
p: 813. 274. 8456 – f: 813. 274. 8080
url: www.tampagov.net

James E. Jackson, Jr. AIA, NOMA
City Architect
Edward D. Rice, AIA
Project Architect
Kevin L. Henika, AIA
Project Architect
Thomas A. Hester, Sr., AIA, NOMA
Project Architect
David R. Pagitt
Supervisor, Architectural Drafting
Kinsey C. Tillman
Drafting Technician
Jerry P. Sanders
Drafting Technician
Byron K. Thomas, LEED AP
Drafting Technician

MEP CONSULTANT
GRINER ENGINEERING, INC.
1628 1st. AVENUE NORTH
ST. PETERSBURG, FL 33713

STRUCTURAL CONSULTANT
BILLER REINHART
STRUCTURAL GROUP, INC.
4014 GUNN HWY. SUITE 248
TAMPA, FL 33713

CIVIL CONSULTANT
B M CIVIL LLC
12315 WYCLIFF PLACE
TAMPA, FL 33626

LANDSCAPE CONSULTANT
DAVID CONNER & ASSOCIATES
1509 W. SWANN AVENUE,SUITE 255
TAMPA, FL 33606

FIRE STATION 23
20770 TROUT CREEK DR.
TAMPA, FL 33647

DPW FILE NUMBER

DPW NUMBER
17–C–00037

ISSUE DATE
07–28–2017

DRAWN BY

REVISIONS
1 10–14–2013

SEAL

Joseph H. Griner III, P.E. FL. 39491

SCALE: N.T.S

FIRE PROTECTION DRAWING INDEX, GENERAL NOTES, LEGENDS AND FLOW AND PRESSURE TEST DATA

SHEET NUMBER

FP–1.0

X OF X

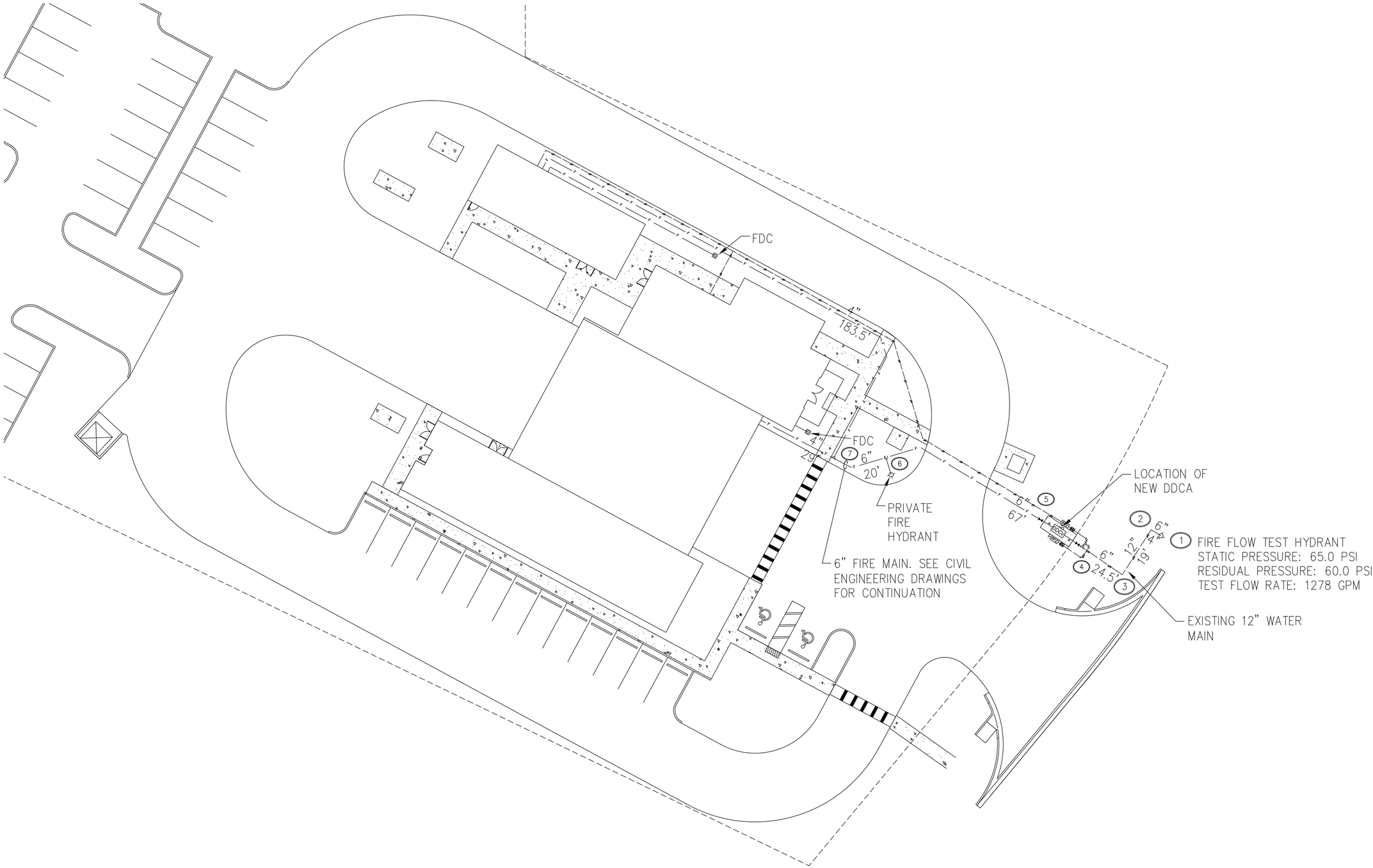

N

FIRE PROTECTION SITE PLAN

SCALE: 1/16" = 1'-0"

GRINER ENGINEERING, INC.
1628 First Avenue North
St. Petersburg, Florida 33713
Phone: (727)-822-2335
Fax: (727)-821-3361
Certificate of Authorization #3173

Date	06-15-2017
Drawn	JL
Designed	JL
EOR	JHG
Job no.	17049

CITY OF TAMPA
CONTRACT ADMINISTRATION DEPARTMENT
PLANNING AND DESIGN DIVISION

306 E. JACKSON STREET 4 NORTH
TAMPA, FLORIDA 33602
p: 813. 274. 8456 – f: 813. 274. 8080
url: www.tampagov.net

James E. Jackson, Jr. AIA, NOMA
City Architect
Edward D. Rice, AIA
Project Architect
Kevin L. Henika, AIA
Project Architect
Thomas A. Hester, Sr., AIA, NOMA
Project Architect
David R. Pagitt
Supervisor, Architectural Drafting
Kinsey C. Tillman
Drafting Technician
Jerry P. Sanders
Drafting Technician
Byron K. Thomas, LEED AP
Drafting Technician

MEP CONSULTANT
GRINER ENGINEERING, INC.
1628 1st. AVENUE NORTH
ST. PETERSBURG, FL 33713

STRUCTURAL CONSULTANT
BILLER REINHART
STRUCTURAL GROUP, INC.
4014 GUNN HWY. SUITE 248
TAMPA, FL 33713

CIVIL CONSULTANT
5 M CIVIL LLC
12315 WYCLIFF PLACE
TAMPA, FL 33626

LANDSCAPE CONSULTANT
DAVID CONNER & ASSOCIATES
1509 W. SWANN AVENUE,SUITE 255
TAMPA, FL 33606

FIRE STATION 23
20770 TROUT CREEK DR.
TAMPA, FL 33647

DPW FILE NUMBER

DPW NUMBER
17-C-00037

ISSUE DATE
07-28-2017

DRAWN BY

REVISIONS

SEAL

Joseph H. Griner III, P.E. FL. 39491

SCALE: 1/16" = 1'-0"

FIRE PROTECTION SITE PLAN

SHEET NUMBER

FP-2.0

X OF X

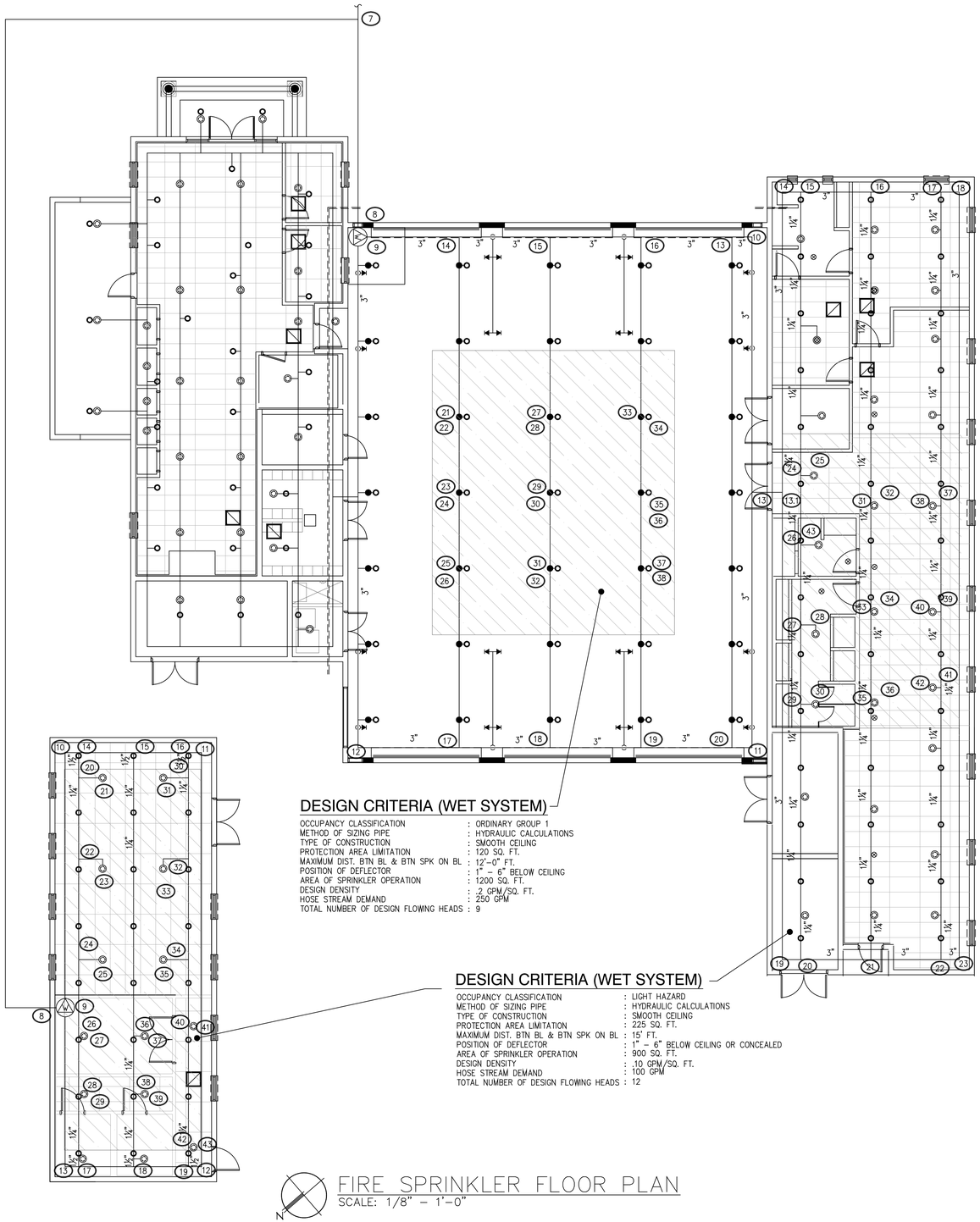

FIRE SPRINKLER FLOOR PLAN

SCALE: 1/8" – 1'–0"

NOTES:
1. ALL CROSS MAIN LINES ARE 2½" BLACK STEEL SCHEDULE 10 UNLESS OTHERWISE NOTED.
2. ALL BRANCH LINES ARE 1" BLACK STEEL SCHEDULE 40 UNLESS OTHERWISE NOTED.
3. SPRINKLER RISER AND FREE STANDING FIRE DEPARTMENT CONNECTION PIPING IS SCHEDULE 40 GALVANIZED STEEL PIPE.

SPRINKLER HEADS AND LEGEND - BASIS OF DESIGN

TYPE	RESPONSE	"K"	ORF	NPT	TEMP. H / C	FINISH HEAD / ESCH.	SYMBOL
CONCEALED	QR	5.6	½"	½"	155°F	WHITE /WHITE	◎
UPRIGHT	QR	5.6	½"	½"	155°F	BRASS	○
PENDENT	QR	5.6	½"	½"	155°F	BRASS	●
SIDEWALL	QR	5.6	½"	½"	155°F	BRASS	▼

SPRINKLERS MODEL NUMBER & FINISH SHALL BE APPROVED BY OWNER / ARCHITECT BEFORE FINAL ORDER IS MAC

CITY OF TAMPA
CONTRACT ADMINISTRATION DEPARTMENT
PLANNING AND DESIGN DIVISION
306 E. JACKSON STREET 4 NORTH
TAMPA, FLORIDA 33602
p: 813. 274. 8456 – f: 813. 274. 8080
url: www.tampagov.net

James E. Jackson, Jr. AIA, NOMA
City Architect
Edward D. Rice, AIA
Project Architect
Kevin L. Henika, AIA
Project Architect
Thomas A. Hester, Sr., AIA, NOMA
Project Architect
David R. Pagitt
Supervisor, Architectural Drafting
Kinsey C. Tillman
Drafting Technician
Jerry P. Sanders
Drafting Technician
Byron K. Thomas, LEED AP
Drafting Technician

MEP CONSULTANT
GRINER ENGINEERING, INC.
1628 1st. AVENUE NORTH
ST. PETERSBURG, FL 33713

STRUCTURAL CONSULTANT
BILLER REINHART STRUCTURAL GROUP, INC.
4014 GUNN HWY. SUITE 248
TAMPA, FL 33713

CIVIL CONSULTANT
B M CIVIL LLC
12315 WYCLIFF PLACE
TAMPA, FL 33626

LANDSCAPE CONSULTANT
DAVID CONNER & ASSOCIATES
1509 W. SWANN AVENUE,SUITE 255
TAMPA, FL 33606

FIRE STATION 23
20770 TROUT CREEK DR.
TAMPA, FL 33647

DPW FILE NUMBER

DPW NUMBER
17-C-00037

ISSUE DATE
07-28-2017

DRAWN BY

REVISIONS

SEAL

Joseph H. Griner III, P.E. FL. 39491

SCALE: 1/8" = 1'–0"

FIRE PROTECTION FLOOR PLAN

SHEET NUMBER
FP–3.0
X OF X

GRINER
GRINER ENGINEERING, INC.
1628 First Avenue North
St. Petersburg, Florida 33713
Phone: (727)-822-2335
Fax: (727)-821-3361
Certificate of Authorization #3173

Date	06-15-2017
Drawn	JL
Designed	JL
EOR	JHG
Job no.	17049

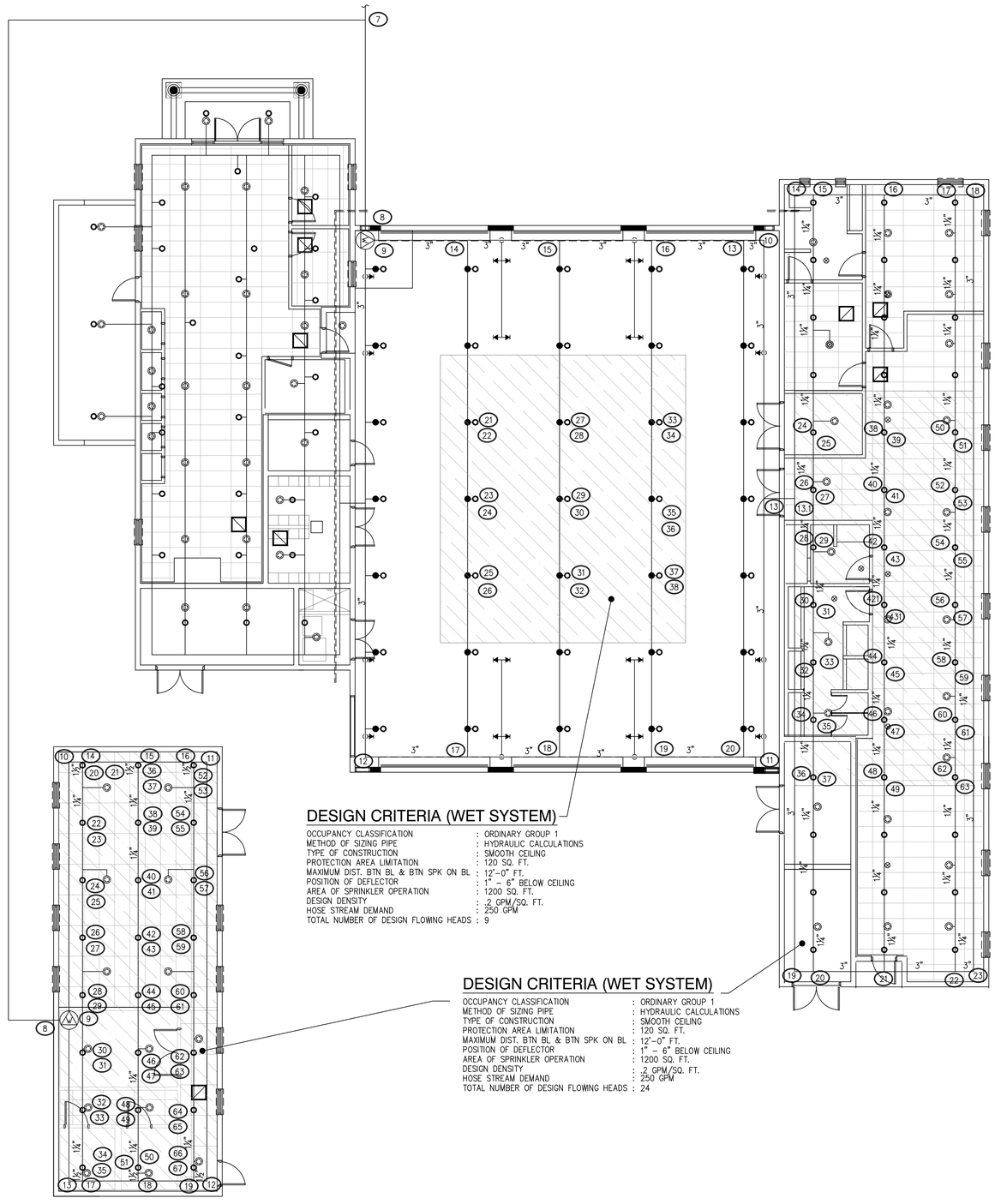

FIRE SPRINKLER ATTIC PLAN

SCALE: 1/8" = 1'-0"

NOTES:
1. ALL CROSS MAIN LINES ARE 2½" BLACK STEEL SCHEDULE 10 UNLESS OTHERWISE NOTED.
2. ALL BRANCH LINES ARE 1" BLACK STEEL SCHEDULE 40 UNLESS OTHERWISE NOTED.
3. SPRINKLER RISER AND FREE STANDING FIRE DEPARTMENT CONNECTION PIPING IS SCHEDULE 40 GALVANIZED STEEL PIPE.

SPRINKLER HEADS AND LEGEND - BASIS OF DESIGN

TYPE	RESPONSE	"K"	ORF	NPT	TEMP. H / C	FINISH HEAD / ESCH.	SYMBOL
CONCEALED	QR	5.6	½"	½"	155°F	WHITE /WHITE	◎
UPRIGHT	QR	5.6	½"	½"	155°F	BRASS	○
PENDENT	QR	5.6	½"	½"	155°F	BRASS	●
SIDEWALL	QR	5.6	½"	½"	155°F	BRASS	▼

SPRINKLERS MODEL NUMBER & FINISH SHALL BE APPROVED BY OWNER / ARCHITECT BEFORE FINAL ORDER IS MAC

CITY OF TAMPA
CONTRACT ADMINISTRATION DEPARTMENT
PLANNING AND DESIGN DIVISION
306 E. JACKSON STREET 4 NORTH
TAMPA, FLORIDA 33602
p: 813. 274. 8456 - f: 813. 274. 8080
url: www.tampagov.net

James E. Jackson, Jr. AIA, NOMA
City Architect
Edward D. Rice, AIA
Project Architect
Kevin L. Henika, AIA
Project Architect
Thomas A. Hester, Sr., AIA, NOMA
Project Architect
David R. Pagitt
Supervisor, Architectural Drafting
Kinsey C. Tillman
Drafting Technician
Jerry P. Sanders
Drafting Technician
Byron K. Thomas, LEED AP
Drafting Technician

MEP CONSULTANT
GRINER ENGINEERING, INC.
1628 1st. AVENUE NORTH
ST. PETERSBURG, FL 33713

STRUCTURAL CONSULTANT
BILLER REINHART STRUCTURAL GROUP, INC.
4014 GUNN HWY. SUITE 248
TAMPA, FL 33713

CIVIL CONSULTANT
B M CIVIL LLC
12315 WYCLIFF PLACE
TAMPA, FL 33626

LANDSCAPE CONSULTANT
DAVID CONNER & ASSOCIATES
1509 W. SWANN AVENUE,SUITE 255
TAMPA, FL 33606

FIRE STATION 23
20770 TROUT CREEK DR.
TAMPA, FL 33647

DPW FILE NUMBER

DPW NUMBER
17-C-00037

ISSUE DATE
07-28-2017

DRAWN BY

REVISIONS

SEAL

Joseph H. Griner III, P.E. FL. 39491

SCALE: 1/8" = 1'-0"

FIRE PROTECTION ATTIC PLAN

SHEET NUMBER
FP-3.1
X OF X

GRINER
GRINER ENGINEERING, INC.
1628 First Avenue North
St. Petersburg, Florida 33713
Phone: (727)-822-2335
Fax: (727)-821-3361
Certificate of Authorization #3173

Date	06-15-2017
Drawn	JL
Designed	JL
EOR	JHG
Job no.	17049

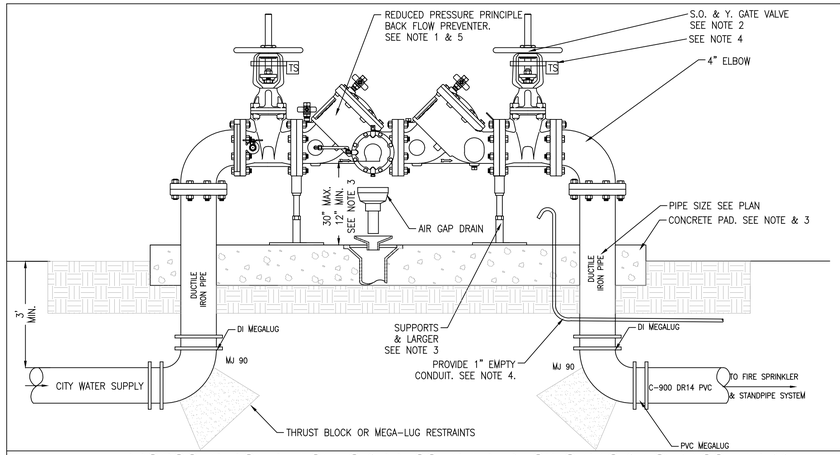

NOTES:

1. REDUCED PRESSURE BACK FLOW PREVENTER ASSEMBLY UL/FM FOR FIRE PROTECTION WATER SUPPLY SERVICE, MODEL & MAKE SHALL BE AS PER CITY OF St. PETERSBURG WATER DEPARTMENT APPROVED STANDARDS.
2. O.S. & Y – UL/FM OUTSIDE STEM & YOKE RESILIENT SEATED GATE VALVE.
3. EXACT DIMENSIONS TO THE CONCRETE SLAB, CONCRETE SLAB REINFORCEMENT & SIZE FOR SERVICING, BACK FLOW PREVENTER SUPPORTS AND DRAIN WITH AIR GAP COMPONENTS SHALL BE AS PER LOCAL WATER DEPARTMENT DETAILS.
4. WIRE VALVES TAMPER SWITCHES TO FIRE ALARM PANEL. RUN EMPTY CONDUIT FOR WIRING BY ELECTRICAL CONTRACTOR. USE OF PADLOCK & CHAIN IF APPROVED BY LOCAL FIRE DEPARTMENT ONLY.
5. PAINT BACK FLOW PREVENTER ASSEMBLY AND EXPOSED PIPING WITH COLOR AS APPROVED BY LOCAL BUILDING DEPARTMENT.
6. PROPOSED FREE STANDING STORZ FIRE DEPARTMENT CONNECTION WITH APPROVED CHECK VALVE SHALL BE PIPED FROM TEE DOWNSTREAM OF THE ALARM VALVE ASSEMBLY IN ACCORDANCE WITH NFPA-13 8.15.1.1.1.3.

PROPOSED DOUBLE CHECK PRESSURE REDUCING BACKFLOW ASSEMBLY

NOT TO SCALE

HYDRAULIC DESIGN SYSTEM

WET SYSTEM

THIS BUILDING IS PROTECTED BY A HYDRAULICALLY DESIGNED AUTOMATIC SPRINKLER SYSTEM

FOR: .....

CONTRACTOR'S NAME: .....

.....

PRINT No. .....DATED: .....

AT ..... CONTACT No. .....

DESIGN DENSITIES:	0.10 GPM/FT²
REQUIRED FLOW:	GPM
AT RESIDUAL PRESSURE:	PSI
HOSE STREAM ALLOWANCES OF: IS INCLUDED IN THE	GPM

ABOVE OCCUPANCY CLASSIFICATION: .....

COMMODITY CLASSIFICATION: .....

MAXIMUM STORAGE HEIGHT: .....

TAG AT SPRINKLER RISER

NOT TO SCALE

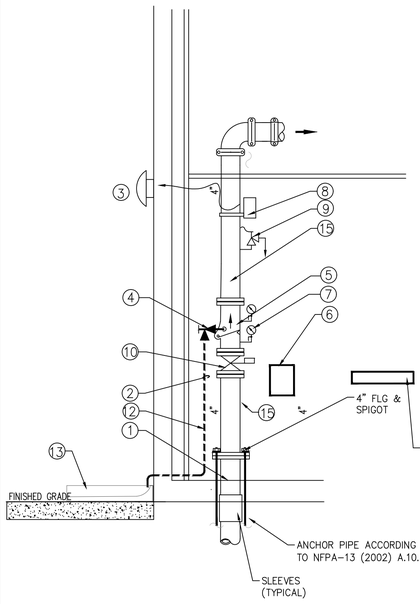

SPRINKLER RISER DETAIL

NOT TO SCALE

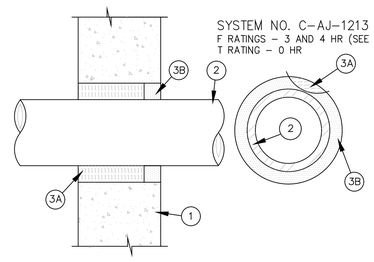

1. FLOOR OR WALL ASSEMBLY – MIN. 4–1/2 IN. THICK REINFORCED LIGHTWEIGHT OR NORMAL WEIGHT (1100–150 PC~ CONCRETE. FLOOR MAY ALSO BE CONSTRUCTED OF ANY MIN. 6 IN. THICK UL CLASSIFIED HOLLOW CORE PRE CAST CONCRETE UNITS *. WALL MAY ALSO BE CONSTRUCTED OF ANY UL CLASSIFIED CONCRETE BLOCKS *. MAX. DIAM OF OPENING IS 28 IN. MAX. DIAM OF OPENING IN FLOOR CONSTRUCTED OF HOLLOW CORE PRE CAST CONCRETE UNITS IS 7 IN. SEE CONCRETE BLOCKS (CAZT) AND PRE CAST CONCRETE UNITS (CFTV) CATEGORIES IN THE FIRE RESISTANCE DIRECTORY FOR NAMES OF MANUFACTURERS.
2. THROUGH PENETRANT – ONE METALLIC PIPE, CONDUIT OR TUBING TO BE INSTALLED EITHER CONCENTRICALLY OR ECCENTRICALLY WITHIN THE FIRE STOP SYSTEM. THE ANNULAR SPACE BETWEEN PIPE, CONDUIT OR TUBING AND PERIPHERY OF OPENING SHALL BE MIN. 0 IN. (POINT CONTACT) TO MAX. 4 IN. PIPE, CONDUIT OR TUBING TO BE RIGIDLY SUPPORTED ON BOTH SIDES OF FLOOR OR WALL ASSEMBLY THE FOLLOWING TYPES AND SIZES OF METALLIC PIPE, CONDUIT OR TUBING MAY BE USED:
   A. STEEL PIPE – NOM 24 IN. DIAM (OR SMALLER) SCHEDULE 10 (OR HEAVIER) STEEL PIPE.
   B. IRON PIPE – NOM 24 IN. DIAM (OR SMALLER) CAST OR DUCTILE IRON PIPE.
   C. CONDUIT – NOM 4 IN. DIAM (OR SMALLER) ELECTRICAL METALLIC TUBING, NOM 6 IN. DIAM (OR SMALLER) STEEL CONDUIT OR NOM 1 IN. DIAM (OR SMALLER) FLEXIBLE STEEL CONDUIT.
   D. COPPER TUBING – NOM 4 IN. DIAM (OR SMALLER) TYPE L (OR HEAVIER) COPPER TUBING.
   E. COPPER PIPE – NOM 4 IN. DIAM (OR SMALLER) REGULAR (OR HEAVIER) COPPER PIPE.
3. FIRE STOP SYSTEM –THE FIRE STOP SYSTEM SHALL CONSIST OF THE FOLLOWING:
   A. PACKING MATERIAL – MIN. 3 IN. THICKNESS OF MIN. 4 PCF MINERAL WOOL BATT INSULATION FIRMLY PACKED INTO OPENING AS A PERMANENT FORM. PACKING MATERIAL TO BE RECESSED FROM TOP SURFACE OF FLOOR OR FROM BOTH SURFACES OF WALL AS REQUIRED TO ACCOMMODATE THE REQUIRED THICKNESS OF FILL MATERIAL. WHEN FLOOR IS CONSTRUCTED OF HOLLOW–CORE PRE CAST CONCRETE UNITS, PACKING MATERIAL IS TO BE RECESSED FROM BOTH SURFACES OF FLOOR TO ACCOMMODATE THE REQUIRED THICKNESS OF FILL MATERIAL.
   B. FILL, VOID OR CAVITY MATERIAL* – CAULK – MIN. 1/2 IN. THICKNESS OF FILL MATERIAL APPLIED WITHIN THE ANNULUS, FLUSH WITH TOP SURFACE OF FLOOR OR WITH BOTH SURFACES OF WALL. WHEN FLOOR IS CONSTRUCTED OF HOLLOW–CORE PRE CAST CONCRETE UNITS, FILL MATERIAL IS TO BE INSTALLED SYMMETRICALLY ON BOTH SIDES OF FLOOR, FLUSH WITH FLOOR SURFACES. AT THE POINT CONTACT LOCATION BETWEEN PIPE AND CONCRETE, A MIN. 3/8 IN. DIAM BEAD OF FILL MATERIAL SHALL BE APPLIED AT THE PIPE/ CONCRETE INTERFACE ON THE TOP SURFACE OF FLOOR AND ON BOTH SURFACES OF WALL OR HOLLOW– CORE PRE CAST CONCRETE FLOOR SPECIFIED TECHNOLOGIES INC. – LC 150, 151, 152 OR 155 SEALANT
   C. STEEL COVER PLATE – (NOT SHOWN)– MIN. 0.014 IN. (NO. 28 GAUGE) GALV STEEL CUT TO FIT THE CONTOUR OF THE THROUGH – PENETRANT (ITEM 2) WITH A MIN. 2 IN. LAP ON THE TOP SURFACE OF FLOOR AND BOTH SURFACES OF WALL ASSEMBLY AROUND THE PERIMETER OF THE THROUGH – OPENING. SEAMS OF STEEL COVER PLATE SHALL OVERLAP A MIN. 1/2 IN. STEEL COVER PLATE SECURED TO TOP SURFACE OF FLOOR AND BOTH SURFACES OF WALL ASSEMBLY BY MEANS OF 1/4 IN. DIAM BY 1–3/4 IN. LONG STEEL CONCRETE ANCHORS IN CONJUNCTION WITH 1/4 IN. BY 1–1 A IN. DIAM STEEL FENDER WASHERS SPACED A MAX. 6 IN. OC. THE HOURLY F RATING OF THE FIRE STOP SYSTEM IS DEPENDENT UPON THE USE OF THE STEEL COVER PLATE. IF THE STEEL COVER PLATE IS USED, THE F RATING OF THE FIRE STOP SYSTEM IS 4 HR. IF THE STEEL COVER PLATE IS OMITTED, THE F RATING OF THE FIRE STOP SYSTEM IS 3 HR.

* BEARING THE UL CLASSIFICATION MARKING

2,3 OR 4 HOUR RATED PENETRATION FOR FLOORS OR WALLS

NOT TO SCALE

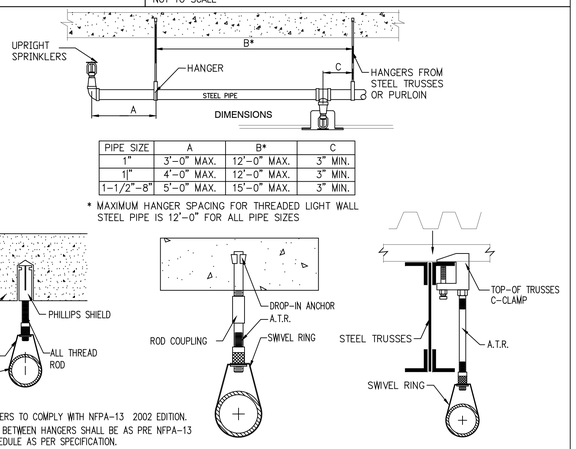

PIPE SIZE	A	B*	C
1"	3'–0" MAX.	12'–0" MAX.	3" MIN.
1"	4'–0" MAX.	12'–0" MAX.	3" MIN.
1–1/2"–8"	5'–0" MAX.	15'–0" MAX.	3" MIN.

* MAXIMUM HANGER SPACING FOR THREADED LIGHT WALL STEEL PIPE IS 12'–0" FOR ALL PIPE SIZES

NOTES:

1. ALL HANGERS TO COMPLY WITH NFPA–13 2002 EDITION.
2. DISTANCE BETWEEN HANGERS SHALL BE AS PRE NFPA–13
3. PIPE SCHEDULE AS PER SPECIFICATION.

PIPE HANGERS

NOT TO SCALE

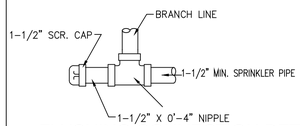

FLUSHING CONNECTION DETAIL

NOT TO SCALE

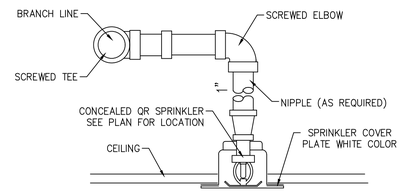

CONCEALED SPRINKLER DETAIL

NOT TO SCALE

FLUSHING CONNECTION AND SPRINKLER DETAIL

NOT TO SCALE

CITY OF TAMPA
CONTRACT ADMINISTRATION DEPARTMENT
PLANNING AND DESIGN DIVISION
306 E. JACKSON STREET 4 NORTH
TAMPA, FLORIDA 33602
p: 813. 274. 8456 – f: 813. 274. 8080
url: www.tampagov.net

James E. Jackson, Jr. AIA, NOMA
City Architect
Edward D. Rice, AIA
Project Architect
Kevin L. Henika, AIA
Project Architect
Thomas A. Hester, Sr., AIA, NOMA
Project Architect
David R. Pagitt
Supervisor, Architectural Drafting
Kinsey C. Tillman
Drafting Technician
Jerry P. Sanders
Drafting Technician
Byron K. Thomas, LEED AP
Drafting Technician

MEP CONSULTANT
GRINER ENGINEERING, INC.
1628 1st. AVENUE NORTH
ST. PETERSBURG, FL 33713

STRUCTURAL CONSULTANT
BILLER REINHART STRUCTURAL GROUP, INC.
4014 GUNN HWY. SUITE 248
TAMPA, FL 33713

CIVIL CONSULTANT
B M CIVIL LLC
12315 WYCLIFF PLACE
TAMPA, FL 33626

LANDSCAPE CONSULTANT
DAVID CONNER & ASSOCIATES
1509 W. SWANN AVENUE,SUITE 255
TAMPA, FL 33606

FIRE STATION 23
20770 TROUT CREEK DR.
TAMPA, FL 33647

DPW FILE NUMBER

DPW NUMBER
17–C–00037

ISSUE DATE
07–28–2017

DRAWN BY

REVISIONS

SEAL

Joseph H. Griner III, P.E. FL. 39491

SCALE: N.T.S

FIRE PROTECTION DETAILS

SHEET NUMBER
FP–4.0
X OF X

GRINER
GRINER ENGINEERING, INC.
1628 First Avenue North
St. Petersburg, Florida 33713
Phone: (727)-822-2335
Fax: (727)-821-3361
Certificate of Authorization #3173

Date	06-15-2017
Drawn	JL
Designed	JL
EOR	JHG
Job no.	17049

FIRE PROTECTION SPECIFICATIONS

SECTION 15310
BASIC FIRE SUPPRESSION MATERIALS AND METHODS

PART 1 GENERAL

1.01 SUMMARY

A. SECTION INCLUDES PIPE, FITTINGS, VALVES, AND CONNECTIONS FOR WET PIPE SPRINKLER SYSTEMS.

1.02 REFERENCES

A. AMERICAN SOCIETY OF MECHANICAL ENGINEERS:
   1. ASME B16.11 – FORGED STEEL FITTINGS – SOCKET-WELDING AND THREADED.
   2. ASME B16.25 – BUTTWELDING ENDS.
   3. ASME B16.3 – MALLEABLE IRON THREADED FITTINGS.
   4. ASME B16.5 – PIPE FLANGES AND FLANGED FITTINGS.
   5. ASME B16.9 – FACTORY-MADE WROUGHT STEEL BUTTWELDING FITTINGS.
   6. ASME B36.10M – WELDED AND SEAMLESS WROUGHT STEEL PIPE.

B. ASTM INTERNATIONAL:
   1. ASTM A53/A53M – STANDARD SPECIFICATION FOR PIPE, STEEL, BLACK AND HOT-DIPPED, ZINC-COATED, WELDED AND SEAMLESS.
   2. ASTM A234/A234M – STANDARD SPECIFICATION FOR PIPING FITTINGS OF WROUGHT CARBON STEEL AND ALLOY STEEL FOR MODERATE AND HIGH TEMPERATURE SERVICE.
   3. ASTM A795 – STANDARD SPECIFICATION FOR BLACK AND HOT-DIPPED ZINC-COATED (GALVANIZED) WELDED AND SEAMLESS STEEL PIPE FOR FIRE PROTECTION USE.

C. AMERICAN WATER WORKS ASSOCIATION:
   1. AWWA C111 – AMERICAN NATIONAL STANDARD FOR RUBBER-GASKET JOINTS FOR DUCTILE-IRON PRESSURE PIPE AND FITTINGS.

D. NATIONAL FIRE PROTECTION ASSOCIATION:
   1. NFPA 13 – INSTALLATION OF SPRINKLER SYSTEMS.
   2. NFPA 24 – INSTALLATION OF PRIVATE FIRE SERVICE MAINS AND THEIR APPURTENANCES.

1.03 SUBMITTALS

A. SHOP DRAWINGS: INDICATE PIPE MATERIALS USED, JOINTING METHODS, SUPPORTS, FLOOR AND WALL PENETRATION SEALS. INDICATE INSTALLATION, LAYOUT, WEIGHTS, MOUNTING AND SUPPORT DETAILS, AND PIPING CONNECTIONS.

B. PRODUCT DATA: SUBMIT MANUFACTURER'S CATALOGUE INFORMATION. INDICATE VALVE DATA AND RATINGS.

1.04 CLOSEOUT SUBMITTALS

A. PROJECT RECORD DOCUMENTS: RECORD ACTUAL LOCATIONS OF COMPONENTS AND TAG NUMBERING.

1.05 QUALITY ASSURANCE

A. PERFORM WORK IN ACCORDANCE WITH NFPA 13 STANDARD.

1.06 QUALIFICATIONS

A. MANUFACTURER: COMPANY SPECIALIZING IN MANUFACTURING PRODUCTS SPECIFIED IN THIS SECTION WITH MINIMUM THREE YEARS EXPERIENCE.

B. INSTALLER: COMPANY SPECIALIZING IN PERFORMING WORK OF THIS SECTION WITH MINIMUM THREE YEARS EXPERIENCE.

1.07 DELIVERY, STORAGE, AND HANDLING

A. DELIVER AND STORE VALVES IN SHIPPING CONTAINERS, WITH LABELING IN PLACE.

B. FURNISH CAST IRON AND STEEL VALVES WITH TEMPORARY PROTECTIVE COATING.

C. FURNISH TEMPORARY END CAPS AND CLOSURES ON PIPING AND FITTINGS. MAINTAIN IN PLACE UNTIL INSTALLATION.

1.08 WARRANTY

A. FURNISH ONE YEAR MANUFACTURER WARRANTY FOR BASIC FIRE SUPPRESSION MATERIALS AND METHODS.

1.10 PRODUCTS

1.09 VALVES

A. GLOBE OR ANGLE VALVES:
   1. UP TO AND INCLUDING 2 INCHES: BRONZE BODY, BRONZE TRIM, RISING STEM AND HAND WHEEL, INSIDE SCREW, RENEWABLE RUBBER DISC, THREADED ENDS, WITH BACK SEATING CAPACITY.
   2. OVER 2 INCHES: IRON BODY, BRONZE TRIM, RISING STEM, HAND WHEEL, OS&Y, PLUG-TYPE DISC, FLANGED ENDS, RENEWABLE SEAT AND DISC.

B. BALL VALVES:
   1. UP TO AND INCLUDING 2 INCHES: BRONZE TWO PIECE BODY, BRASS, CHROME PLATED BRONZE, OR STAINLESS STEEL BALL, TEFLON SEATS AND STUFFING BOX RING, LEVER HANDLE, THREADED ENDS WITH UNION.

C. BUTTERFLY VALVES:
   1. CAST OR DUCTILE IRON BODY: CAST OR DUCTILE IRON, CHROME OR NICKEL PLATED DUCTILE IRON OR ALUMINUM BRONZE DISC, RESILIENT REPLACEABLE EPDM SEAT, WAFER, LUG, OR GROOVED ENDS. WITH EXTENDED NECK, HAND WHEEL AND GEAR DRIVE AND INTEGRAL INDICATING DEVICE, AND EXTERNAL TAMPER SWITCH RATED AT 115 VOLT AC.

D. CHECK VALVES:
   1. UP TO AND INCLUDING 2 INCHES: BRONZE BODY AND SWING DISC, RUBBER SEAT, THREADED ENDS.
   2. OVER 2 INCHES: IRON BODY, BRONZE TRIM, SWING CHECK WITH RUBBER DISC, RENEWABLE DISC AND SEAT, FLANGED ENDS WITH AUTOMATIC BALL CHECK.
   3. 4 INCHES AND OVER: IRON BODY, BRONZE DISC WITH STAINLESS STEEL SPRING, RESILIENT SEAL, THREADED, WAFER, OR FLANGED ENDS.

E. DRAIN VALVES:
   1. COMPRESSION STOP: BRONZE WITH HOSE THREAD NIPPLE AND CAP.
   2. BALL VALVE: BRASS WITH CAP AND CHAIN, 3/4 INCH HOSE THREAD.

1.010 BURIED PIPING

A. SERIES IBR IN-BUILDING RISER, STAINLESS STEEL TYPE 305 WITH TIE ROD BRACKET & CIPS COUPLING END FOR DUCTILE IRON PIPE.

1.011 ABOVE GROUND PIPING

A. STEEL PIPE: ASTM A53/A53M, GRADE B. SCHEDULE 10 (PIPE SIZES 2" AND LARGER):
   1. MECHANICAL GROOVED COUPLINGS: MALLEABLE IRON HOUSING CLAMPS TO ENGAGE AND LOCK, "C" SHAPED ELASTOMERIC SEALING GASKET, STEEL BOLTS, NUTS, AND WASHERS; GALVANIZED FOR GALVANIZED PIPE.
   2. MECHANICAL FORMED FITTINGS: CARBON-STEEL HOUSING WITH INTEGRAL PIPE STOP AND O-RING POCKED AND O-RING UNIFORMLY COMPRESSED INTO PERMANENT MECHANICAL ENGAGEMENT ONTO PIPE.

B. STEEL PIPE: ASTM A53/A53M, GRADE B. SCHEDULE 40 (PIPOE SIZES 1-1/2" AND SMALLER):
   1. MALLEABLE IRON FITTINGS: ASME B16.3, THREADED FITTINGS.

1.012 PIPE HANGERS AND SUPPORTS

A. CONFORM TO NFPA 13.

B. HANGERS FOR PIPE SIZES 1/2 TO 1-1/2 INCH: MALLEABLE IRON CARBON STEEL, ADJUSTABLE SWIVEL..

C. HANGERS FOR PIPE SIZES 2 INCH AND OVER: CARBON STEEL, ADJUSTABLE, CLEVIS.

D. VERTICAL SUPPORT: STEEL RISER CLAMP.

1.013 IDENTIFICATION

A. PAINTING: PAINT ALL EXPOSED PIPING IN ACCORDANCE WITH THE FOLLOWING SCHEDULE.
   PIPE SERVICE COLOR #FIRE PROTECTION RED

PART 2 EXECUTION

2.01 PREPARATION

A. REAM PIPE AND TUBE ENDS. REMOVE BURRS.

B. REMOVE SCALE AND FOREIGN MATERIAL, FROM INSIDE AND OUTSIDE, BEFORE ASSEMBLY.

C. PREPARE PIPING CONNECTIONS TO EQUIPMENT WITH FLANGES OR UNIONS.

2.02 INSTALLATION

A. INSTALL PIPING IN ACCORDANCE WITH NFPA 13 FOR SPRINKLER SYSTEMS, AND NFPA 24 FOR SERVICE MAINS.

B. ROUTE PIPING IN ORDERLY MANNER, PLUMB AND PARALLEL TO BUILDING STRUCTURE. MAINTAIN GRADIENT.

C. INSTALL PIPING TO CONSERVE BUILDING SPACE, TO NOT INTERFERE WITH USE OF SPACE AND OTHER WORK.

D. GROUP PIPING WHENEVER PRACTICAL AT COMMON ELEVATIONS.

E. INSTALL PIPE SLEEVE AT PIPING PENETRATIONS THROUGH PARTITIONS, WALLS, AND FLOORS. SEAL PIPE AND SLEEVE PENETRATIONS TO MAINTAIN FIRE RESISTANCE EQUIVALENT TO FIRE SEPARATION.

F. INSTALL PIPING TO ALLOW FOR EXPANSION AND CONTRACTION WITHOUT STRESSING PIPE, JOINTS, OR CONNECTED EQUIPMENT.

G. PIPE HANGERS AND SUPPORTS:
   1. INSTALL IN ACCORDANCE WITH NFPA 13.
   2. INSTALL HANGERS TO WITH MINIMUM 1/2 INCH SPACE BETWEEN FINISHED COVERING AND ADJACENT WORK.
   3. PLACE HANGERS WITHIN 12 INCHES OF EACH HORIZONTAL ELBOW.
   4. USE HANGERS WITH 1-1/2 INCH MINIMUM VERTICAL ADJUSTMENT. DESIGN HANGERS FOR PIPE MOVEMENT WITHOUT DISENGAGEMENT OF SUPPORTED PIPE.
   5. SUPPORT VERTICAL PIPING AT EVERY FLOOR. SUPPORT RISER PIPING INDEPENDENTLY OF CONNECTED HORIZONTAL PIPING.

H. SLOPE PIPING AND ARRANGE SYSTEMS TO DRAIN AT LOW POINTS. INSTALL ECCENTRIC REDUCERS TO MAINTAIN TOP OF PIPE LEVEL.

I. PREPARE PIPE, FITTINGS, SUPPORTS, AND ACCESSORIES FOR FINISH PAINTING. WHERE PIPE SUPPORT MEMBERS ARE WELDED TO STRUCTURAL BUILDING FRAMING, SCRAPE, BRUSH CLEAN, AND APPLY ONE COAT OF ZINC RICH PRIMER TO WELDING. REFER TO SECTION 09900.

J. DO NOT PENETRATE BUILDING STRUCTURAL MEMBERS UNLESS INDICATED.

K. WHERE MORE THAN ONE PIPING SYSTEM MATERIAL IS SPECIFIED, INSTALL COMPATIBLE SYSTEM COMPONENTS AND JOINTS. INSTALL FLANGES, UNION, AND COUPLINGS AT LOCATIONS REQUIRING SERVICING.

L. DIE CUT THREADED JOINTS WITH FULL CUT STANDARD TAPER PIPE THREADS WITH RED LEAD AND LINSEED OIL OR OTHER NON-TOXIC JOINT COMPOUND APPLIED TO MALE THREADS ONLY.

M. INSTALL VALVES WITH STEMS UPRIGHT OR HORIZONTAL, NOT INVERTED. REMOVE PROTECTIVE COATINGS PRIOR TO INSTALLATION.

N. INSTALL BALL OR BUTTERFLY VALVES FOR SHUT-OFF OR ISOLATING SERVICE.

O. INSTALL DRAIN VALVES AT MAIN SHUT-OFF VALVES, LOW POINTS OF PIPING AND APPARATUS.

END OF SECTION

GRINER ENGINEERING, INC.
1628 First Avenue North
St. Petersburg, Florida 33713
Phone: (727)-822-2335
Fax: (727)-821-3361
Certificate of Authorization #3173

Date	06-15-2017
Drawn	JL
Designed	JL
EOR	JHG
Job no.	17049

CITY OF TAMPA
CONTRACT ADMINISTRATION DEPARTMENT
PLANNING AND DESIGN DIVISION
306 E. JACKSON STREET 4 NORTH
TAMPA, FLORIDA 33602
p: 813. 274. 8456 – f: 813. 274. 8080
url: www.tampagov.net

James E. Jackson, Jr. AIA, NOMA
City Architect
Edward D. Rice, AIA
Project Architect
Kevin L. Henika, AIA
Project Architect
Thomas A. Hester, Sr., AIA, NOMA
Project Architect
David R. Pagitt
Supervisor, Architectural Drafting
Kinsey C. Tillman
Drafting Technician
Jerry P. Sanders
Drafting Technician
Byron K. Thomas, LEED AP
Drafting Technician

MEP CONSULTANT
GRINER ENGINEERING, INC.
1628 1st. AVENUE NORTH
ST. PETERSBURG, FL 33713

STRUCTURAL CONSULTANT
BILLER REINHART
STRUCTURAL GROUP, INC.
4014 GUNN HWY. SUITE 248
TAMPA, FL 33713

CIVIL CONSULTANT
B M CIVIL LLC
12315 WYCLIFF PLACE
TAMPA, FL 33626

LANDSCAPE CONSULTANT
DAVID CONNER & ASSOCIATES
1509 W. SWANN AVENUE,SUITE 255
TAMPA, FL 33606

FIRE STATION 23
20770 TROUT CREEK DR.
TAMPA, FL 33647

DPW FILE NUMBER

DPW NUMBER
17-C-00037

ISSUE DATE
07-28-2017

DRAWN BY

REVISIONS

SEAL

Joseph H. Griner III, P.E. FL. 39491

SCALE: N.T.S

FIRE PROTECTION SPECIFICATIONS

SHEET NUMBER
FP-5.0
X OF X